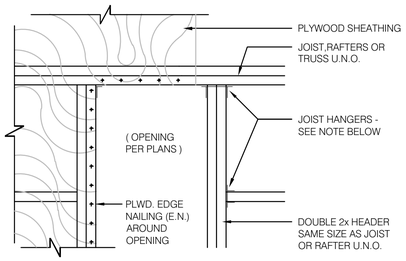

NOTE:
HANGERS SHALL BE "SIMPSON" STANDARD "U" @ ROOF. DBL. JOIST OR RAFTERS SHALL BE JOINED TOGETHER AS FOLLOWS:
1. 10" OR LESS NOM. DEPTH - 16d @ 12" O.C. STAGGERED
2. MORE THAN 10" - (2)16d @ 12" O.C.

TYPICAL ROOF OPENING 1"=1'-0" **17**

TRUSS TYPES	SINGLE TRUSS DESIGNATION	DOUBLE TRUSS DESIGNATION	BEARING POINT	COMMENTS
T-1	X	XX	△	SEE NOTE 1.

NOTES:

1. REFER TO TRUSS-TYPE ELEVATION 1, THIS SHEET. PROVIDE DOUBLE THICKNESS TRUSS (WHERE INDICATED 'XX') AS REQUIRED BY TRUSS DESIGN. COORDINATE TRUSS-TYPES WITH SHEET S4.0.
2. HOLDDOWN CONNECTORS SHALL BE SPECIFIED BY SITE SPECIFIC ARCHITECT/ ENGINEER BASED UPON LOADING DATA PROVIDED BY TRUSS DESIGNER.
3. PROVIDE SHOP DRAWINGS PRIOR TO FABRICATION.
4. TRUSS MEMBER SIZES ARE FOR REFERENCE ONLY. ACTUAL SIZE SHALL BE DETERMINED BY TRUSS MANUFACTURER BASED ON ACTUAL LOAD CONDITIONS AND CODES.

TRUSS SCHEDULE **13**

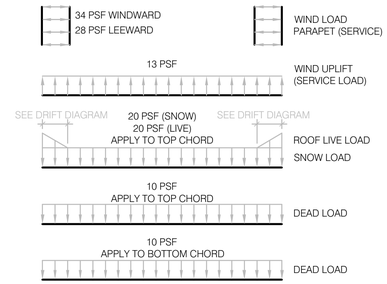

NOTE:
ALSO: APPLY ROOF TOP AND SUSPENDED POINT LOADS. WEIGHT AND LOCATION OF UNITS AS NOTED ARE SHOWN ON THIS SHEET AND ARE NOT INCLUDED IN THE ABOVE LOADING DIAGRAM. VERIFY THESE LOADS WITH MECHANICAL SUPPLIER BEFORE DESIGNING TRUSS.

TRUSS DESIGN CRITERIA N.T.S. **9**

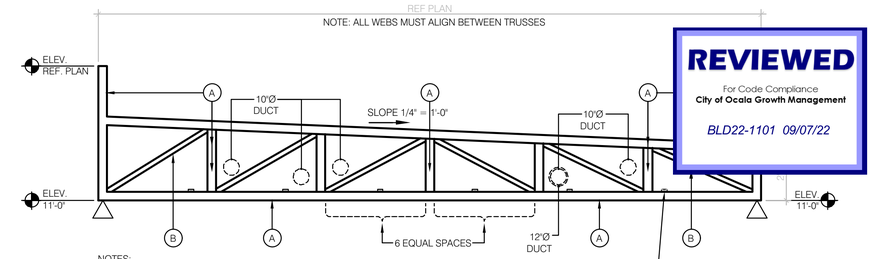

REVIEWED
For Code Compliance
City of Ocala Growth Management
BLD22-1101 09/07/22

NOTES:

1. TRUSS DEPTH TO BE DETERMINED BY SITE-ADAPT ENGINEER OF RECORD.
2. REFER TO SHEET M2.0 FOR COORDINATION OF SUPPLY AIR DUCTS WITHIN FRONT OF HOUSE TRUSS WEB SPACE.

CONT 2X4 LATERAL BRACING AT 5'-0"O.C. MIN. OR PER TRUSS DESIGN LAID FLAT & NAILED TO TOP OF BOTTOM CHORD. APPLY MOST STRINGENT STANDARD.

A	2 x 6 MIN.
B	2 x 4 MIN.

TRUSS ELEVATION 1/4" = 1'-0" **1**

LIS ARCHITECTURE ENGINEERING
ENGINEERING OFFICE
21430 Palm Beach Blvd.
Alva, Fla. 33920
Phone: (239) 693-9244
facsimile: (239) 693-9828
LAND INVESTMENT SERVICES, LLC
AA 26002040 CA NO: 6853 LB1057
ARCHITECTURE / ENGINEERING OFFICE
2572 West State Road 426
Suite 2064, Oviedo, FL 32765
Phone: (321) 244-9419
facsimile: (321) 244-9419

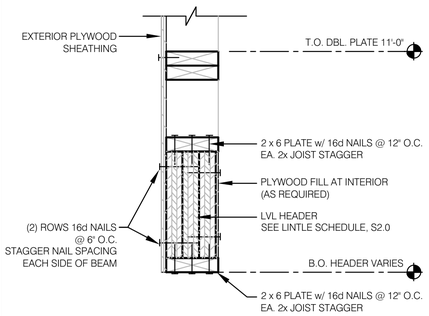

TYP. LVL HEADER 1 1/2" = 1'-0" **18**

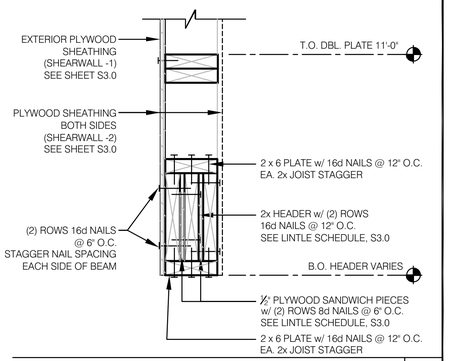

TYP. BUILT-UP HEADER 1 1/2"=1'-0" **14**

EQUIPMENT	DESIGN WEIGHT	NOTES
HVAC UNIT - RTU-1	2,600 lbs.	A, B
HVAC UNIT - RTU-2	2,600 lbs.	A, B
EXHAUST FAN - EF-1	200 lbs.	A
EXHAUST FAN - EF-2	200 lbs.	A
EXHAUST FAN - EF-3	100 lbs.	A
EXHAUST FAN - EF-4	50 lbs.	A
EXHAUST FAN - EF-5	50 lbs.	A
HOOD #1	690 lbs.	
HOOD #2	690 lbs.	
ICE CONDENSER #1	175 lbs.	
ICE CONDENSER #2	175 lbs.	
COOLER CONDENSER	175 ea	
MUZAK DISH, SLED & BALLAST - ALLOW FOR LOCATION ANYWHERE ON ROOF.	1,090 lbs.	

NOTE:
A. ALL DESIGN WEIGHTS INCLUDE CURB.
B. COORDINATE WEIGHTS WITH HVAC UNIT SCHEDULE, SEE 1 / M1.0,

ROOF TOP EQUIPMENT WEIGHTS **10**

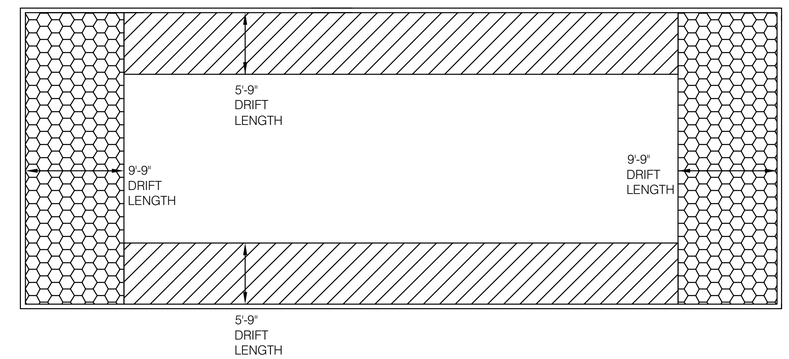

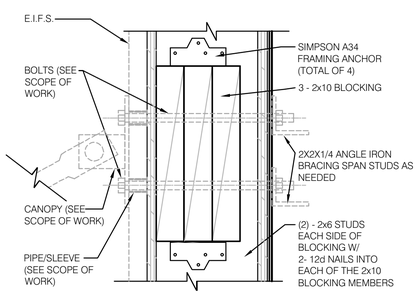

CANOPY / TIE-ROD BLOCKING 3" = 1'-0" **19**

CONNECTION TYPE: NAILING:

1. JOIST TO SILL OR GIRDER, TOENAIL	(3-8d)
2. BRIDGING TO JOIST, TOENAIL EACH END	(2-8d)
3. 1"x6" (25MMx152MM) SUBFLOOR OR LESS TO JOIST, FACE NAIL	(2-8d)
4. WIDER THAN 1" X 6"(25MMx152MM) SUBFLOOR TO JOIST, FACE NAIL	(3-8d)
5. 2" (52MM) SUBFLOOR TO GIRDER, BLIND AND FACE NAIL	(2-16d)
6. SOLE PLATE TO JOIST OR BLOCKING, TYPICAL FACE NAIL	(16d @16" O.C.)
7. SOLE PLATE TO JOIST OR BLOCKING, AT BRACED W. PANELS	(3-16d PER 16")
8. TOP PLATE TO STUD, END NAIL	(2-16d)
9. STUD TO SOLE PLATE	(2-16d END NAIL)
10. DOUBLE STUDS, FACE NAIL	(16d @ 24", O.C.)
11. DOUBLE TOP PLATES, TYPICAL FACE NAIL	(16d @ 16" O.C.)
12. DOUBLE TOP PLATES, LAP SPLICE	(8-16d)
13. BLOCKING BETWEEN JOISTS OR RAFTERS TO TOP PLATE, TOENAIL	(3-8d)
14. RIM JOIST TO TOP PLATE, TOENAIL	(8d @ 6" O.C.)
15. TOP PLATES, LAPS AND INTERSECTIONS, FACE NAIL	(2-16D)
16. CONTINUOUS HEADER, TWO PIECES	(16d @ 16" O.C. ALONG EDGE)
17. CEILING JOISTS TO PLATE, TOENAIL	(3-8d)
18. CONTINUOUS HEADER TO STUD, TOENAIL	(4-8d)
19. CEILING JOISTS, LAP OVER PARTITIONS, FACE NAIL	(3-16d)
20. CEILING JOISTS TO PARALLEL RAFTERS, FACE NAIL	(3-16d)
21. RAFTER TO PLATE, TOENAIL	(3-8d)
22. 1" (25MM) BRACE TO EACH STUD AND PLATE, FACE NAIL	(2-8d)
23. 1"x8" SHEATHING OR LESS TO EACH BEARING, FACE NAIL	(2-8d)
24. WIDER THAN 1"x8" SHEATHING TO EACH BEARING, FACE NAIL	(3-10d)
25. BUILT-UP CORNER STUDS	(16d @ 24" O.C.)
26. 2" PLANKS	(2-16d AT EACH SPLICE)
27. 2x6 BOX BEAM / HEADER	(12d @ 12" O.C.)
28. BUILT-UP GIRDER AND BEAMS	(20d @ 32" O.C. AT TOP & BOTTOM AND STAGGERED 2-20d AT ENDS AND AT EACH SPLICE)

NAILING SCHEDULE **16**

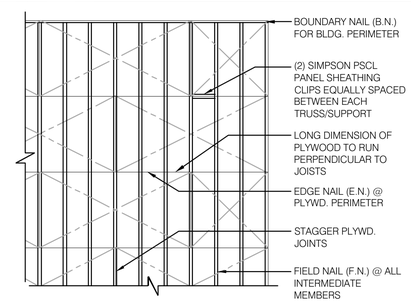

NOTES:
1. MIN. PLYWD. SHT. SIZE SHALL BE 2'-0" X 4'-0".
2. MIN. 3/8" NAILING EDGE DISTANCE.
3. EDGE NAIL (E.N.) O/ BEAMS AND AROUND ALL OPENINGS.

DEFINITIONS:
BN DENOTES BOUNDARY NAILING
EN DENOTES EDGE NAILING
FN DENOTES FIELD NAILING

ROOF NAILING PLAN N.T.S. **11**

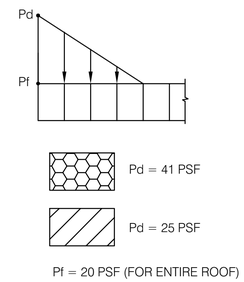

SNOW DRIFT LOADING N.T.S. **3**

NOT USED **20**

NOT USED **12**

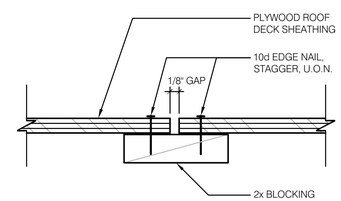

PLYWOOD EDGE BLOCKING N.T.S. **8**

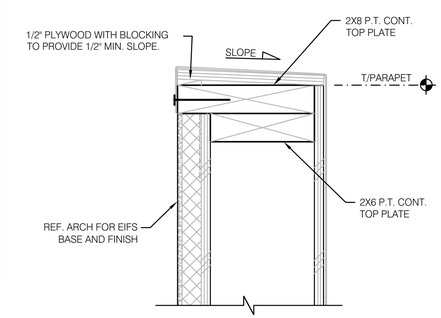

TYP. PARAPET CAP 3" = 1'-0" **4**

Digitally signed by ROBERT W CASE
Date: 2022.03.31 10:45:36 -04'00'
ROBERT WAYNE CASE
FLORIDA PE. #44643

PLAN SET REVISIONS:

CONTRACT DATE:	-.-.-2019
BUILDING TYPE:	Kb 30-19
PLAN VERSION:	2018.A
SITE NUMBER:	
ENTITY NUMBER:	
STORE NUMBER:	
LIS PROJECT;	2019-304

KFC
3615 W SILVER SPRINGS BLVD.
OCALA, FL

Kb 30-19

STRUCTURAL DETAILS (ROOF)

S5.2

PLOT DATE: 03/29/2022