"MORNING ARRIVAL"

STEP 1

TURN THE KITCHEN UNOCCUPIED–OCCUPIED SWITCH TO THE THE OCCUPIED POSITION. THE KITCHENS AIR CONDITIONING SYSTEM WILL GO FROM NIGHT SETBACK MODE TO THE THERMOSTAT SET POINT.

NOTE: THE AIR CONDITIONING FAN WILL START AND RUN CONTINUOUSLY. EXHAUST FAN WILL NOT RUN UNTIL THIS SWITCH IS IN THE OCCUPIED POSITION.

STEP 2

TURN ON THE EXHAUST FAN SWITCH TO THE ON POSITION THIS WILL ALLOW YOU TO TURN ON THE FRYERS AND BROILER.

"RESTAURANT OPEN FOR BUSINESS"

STEP 1

TURN THE DINING UNOCCUPIED–OCCUPIED SWITCH TO THE THE OCCUPIED POSITION. THE DINING AIR CONDITIONING SYSTEM WILL GO FROM NIGHT SETBACK MODE TO THE THERMOSTAT SET POINT.

STEP 2

TURN THE SIGN AND PARKING LOT LIGHTING SWITCHES TO THE AUTO POSITION, THIS WILL ENGAGE THE LIGHTING PHOTOCELLS SO THAT THE LIGHTS WILL AUTOMATICALLY COME ON AFTER DARK. TURN THE SWITCH TO THE ON POSITION TO OVER RIDE THE PHOTOCELLS AT ANY TIME THE LIGHTING MUST REMAIN ON.

"RESTAURANT CLOSE FOR BUSINESS"

STEP 1

TURN THE DINING UNOCCUPIED–OCCUPIED SWITCH TO THE UNOCCUPIED POSITION. THE DINING AIR CONDITIONING SYSTEM WILL GO FROM THE THERMOSTAT SET POINT TO THE NIGHT SET BACK MODE.

STEP 2

TURN THE SIGN AND PARKING LOT LIGHTING SWITCHES TO THE OFF POSITION, THIS WILL DISENGAGE THE LIGHTING PHOTOCELLS.

STEP 3

TURN THE EXHAUST FAN SWITCH TO THE OFF POSITION THE BROILERS EXHAUST FAN WILL CONTINUE TO RUN FOR 15 MINUTES FOR A COOL DOWN CYCLE, AND THEN SHUT OFF AUTOMATICALLY.

NOTE: THE FRYERS AND BROILER SHOULD BE TURNED OFF AND ALLOWED TO COOL DOWN BEFORE TURNING THE HOOD OFF. TO PREVENT ACCIDENTAL ANSUL DISCHARGE, THE BROILERS HOOD WILL ALWAYS RUN 15 MINUTES AFTER THE EXHAUST FAN SWITCH IS TURNED TO THE OFF POSITION.

"EMPLOYEES LEAVING THE BUILDING"

STEP 1

WHEN READY TO EXIT THE BUILDING PUSH THE SECURITY DEPARTURES SWITCH. THE PARKING LOT LIGHTS WILL COME BACK ON FOR 15 MINUTES THEN SHUT OFF AUTOMATICALLY.

"MANAGER/LAST PERSON LEAVING THE BUILDING"

STEP 1

TURN THE KITCHEN UNOCCUPIED–OCCUPIED SWITCH TO THE UNOCCUPIED POSITION. THE KITCHENS AIR CONDITIONING SYSTEM WILL GO FROM THE THERMOSTAT SET POINT TO THE NIGHT SET BACK MODE.

STEP 2

WHEN READY TO EXIT THE BUILDING PUSH THE SECURITY DEPARTURE SWITCH. THE PARKING LOT LIGHTS WILL COME BACK ON FOR 15 MINUTES THEN SHUT OFF AUTOMATICALLY.

"HOOD VENTILATION SYSTEM NOTE"

WHEN THE HOOD EXHAUST FAN CURRENT SENSOR DETECTS A DROP IN AMPERAGE (SUCH AS A BELT BREAKING) IT WILL DISABLE THE LINE VOLTAGE TO THE EXHAUST FAN(S), FRYER AND BROILER APPLIANCES. THE EXHAUST FAN SWITCH SHOULD BE PLACED IN THE OFF POSITION AND THE FAN SHOULD BE CHECKED AND/OR REPAIRED BEFORE TURNING THE SWITCH TO THE ON POSITION.

"PARKING LOT LIGHTING NOTE"

WHEN THE PARKING LOT LIGHTS ARE TURNED OFF, THEY MUST COOL DOWN FOR ABOUT 10 MINUTES BEFORE THEY WILL COME BACK ON.

*NOTE: IF IT IS NECESSARY TO ADJUST THE AMPERAGE OF THE BROILER EXHAUST HOOD FAN MOTOR, THE FAN MOTOR CURRENT SENSOR MUST BE RESET AS FOLLOWS: ADJUST UNDERCURRENT POTENTIOMETER TO MAXIMUM (CLOCKWISE IS MAXIMUM.) APPLY CURRENT. ONCE CURRENT IS STABILIZED, DECREASE UNDERCURRENT POT UNTIL RED LIGHT TURNS OFF. WITHIN SEVEN SECONDS TURN UP UNTIL RED LIGHT TURNS ON. IF A LIGHT REMAINS OFF FOR MORE THEN TEN SECONDS, DISCONNECT SUPPLY VOLTAGE TO RESET. SEE INSTALLATION INSTRUCTIONS PN MRP COVER.

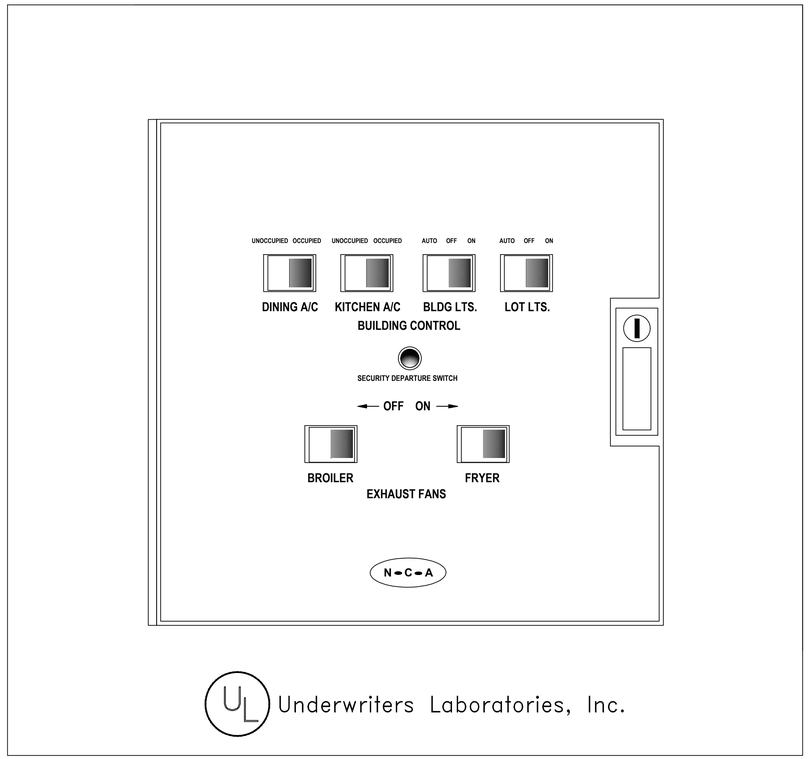

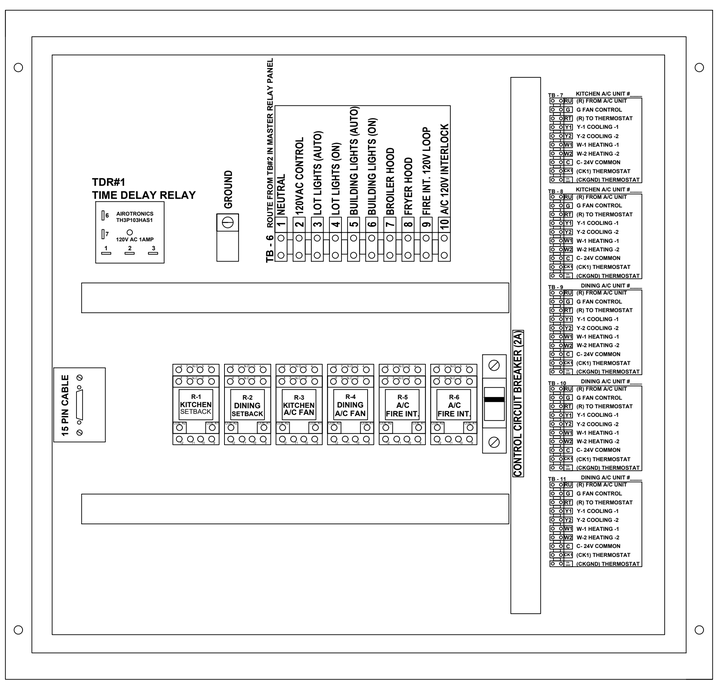

SEQUENCE OF OPERATION

MANUAL CONTROL SYSTEM

THE A/C UNITS UNOCCUPIED-OCCUPIED SWITCH IS USED TO: TURN THE STORE ON IN THE MORNING AND OFF IN THE EVENING.

WHEN A/C UNIT UNOCCUPIED-OCCUPIED SWITCH IS TURNED TO THE ON POSITION:
THE AIR CONDITIONING SYSTEM WILL GO FROM NIGHT MODE TO SYSTEM ON.

THE AIR CONDITIONING FANS WILL START AND RUN CONTINUOUSLY.

THE OUTDOOR DAMPERS WILL OPEN TO A PRESET POSITION. (OPTIONAL)

DAMPERS WILL NOT OPEN DURING NIGHT SET BACK MODE. (OPTIONAL)

THE AIR CONDITIONERS WILL BEGIN TO COOL OR HEAT AT THE OCCUPIED TEMPERATURE SETPOINT.

THE COOKING EQUIPMENT AND EXHAUST FANS CAN NOW BE TURNED ON WHEN NEEDED.

WHEN A/C UNOCCUPIED-OCCUPIED SWITCH IS TURNED TO THE OFF POSITION:
EXHAUST FANS, SUPPLY FANS, AND EVAPORATOR BLOWERS WILL SHUT DOWN.

THE HEATING AND COOLING OPERATION SHALL REVERT TO SYSTEM NIGHT SET BACK MODE.

THE COOKING EQUIPMENT SHALL BE DISABLED.

THE SIGNAGE LIGHTING & LOT LIGHTING SHALL BE DISABLED IF SWITCHES ARE IN THE OFF POSITION.

THE PARKING LOT POLE LIGHTS & SECURITY LIGHTS SHALL REMAIN ON FOR 15 MIN AFTER THE SECURITY DEPARTURE SWITCH IS ACTIVATED.

WHEN THE HOOD EXHAUST FAN CURRENT SENSOR DETECTS A DROP IN AMPERAGE
IT WILL DISABLE THE LINE VOLTAGE TO THE FRYER AND BROILER APPLIANCES.

HOOD VENTILATION SYSTEM

IF THE HOOD VENTILATION SWITCH IS IN THE OPEN POSITION, THE HOOD VENTILATION SYSTEM CAN BE STARTED.

THE BROILER SYSTEM AND THE FRYER SYSTEM SHALL BE STARTED BY MOVING THE ON/OFF SWITCH TO THE ON POSITION. IF EITHER THE BROILER OR FRYER SWITCH IS IN THE ON POSITION, THE MAKE-UP AIR UNIT (IF APPLICABLE) SHALL START AUTOMATICALLY.

ACTIVATION OF THE HOOD FIRE SUPPRESSION SYSTEM SHALL DE-ENERGIZE THE MAKE UP AIR UNIT, ALL A/C UNITS, AND THE CONTROLLED COOKING EQUIPMENT. THE BROILER AND THE FRYER EXHAUST SYSTEM SHALL CONTINUE TO OPERATE. THE FIRE SUPPRESSION SYSTEM SHALL BE MANUALLY RESET.

EXTERIOR LIGHTING CONTROL

ALL OF THE EXTERIOR LIGHTING SHALL BE CONTROLLED, WITH THE EXCEPTION OF THE SECURITY LIGHTS WHICH SHALL BE OPERATED BY ITS OWN PHOTOCELL. SECURITY LIGHTING IS OPTIONAL.

THE SIGNAGE SELECTOR SWITCH (3-POS.) CONTROLS THE PRIME SIGN, ALL MARQUEE SIGNS, AND BUILDING ACCENT LIGHTING.

ON POSITION: LIGHTING SHALL BE ON PERMANENTLY.

OFF POSITION: LIGHTING SHALL BE OFF PERMANENTLY.

AUTO POSITION: LIGHTING SHALL BE CONTROLLED BY THE PHOTO CELL.

THE LOT LIGHTS THREE POSITION SWITCH WORKS THE SAME AS THE SIGNAGE SWITCH.

NOTE: UNOCCUPIED-OCCUPIED / MASTER RELAY PANEL SHALL BE COMPLETE WHEN SHIPPED TO THE JOB SITE. NO INTERNAL WIRING SHALL BE REQUIRED. MAKE ALL EXTERNAL WIRING CONNECTIONS AS REQUIRED.

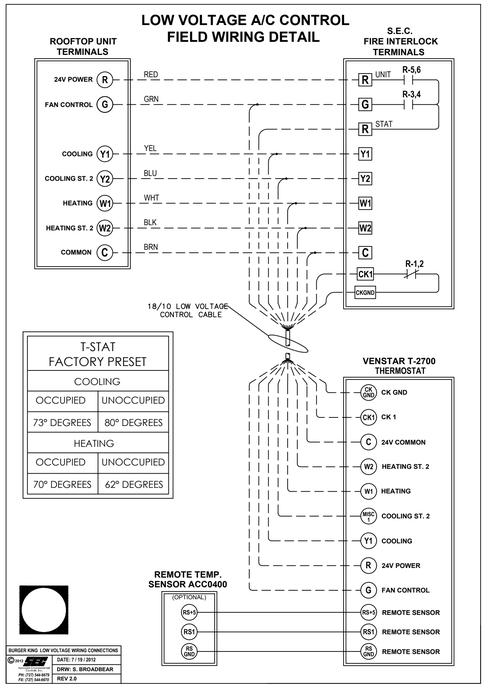

T-STAT FACTORY PRESET	
COOLING	
OCCUPIED	UNOCCUPIED
73° DEGREES	80° DEGREES
HEATING	
OCCUPIED	UNOCCUPIED
70° DEGREES	62° DEGREES

ELECTRICAL CONTRACTOR NOTES:

1. RUN ONE (10) CONDUCTOR 18 GAUGE THERMOSTAT CABLE FROM THE ROOFTOP AIR CONDITIONING UNIT TO THE "UNOCCUPIED-OCCUPIED" PANEL.
2. RUN ONE (10) CONDUCTOR 18 GAUGE THERMOSTAT CABLE FROM THE "UNOCCUPIED-OCCUPIED" PANEL TO THE THERMOSTAT LOCATION.
3. RUN ONE (10) CONDUCTOR 18 GAUGE THERMOSTAT CABLE FROM THE ROOFTOP AIR CONDITIONING UNIT TO THE NIGHT SETBACK THERMOSTAT LOCATION, IF NOT CONTROLLED WITH P-374-2700 T-STAT. REFER TO SHEET M-1
4. TERMINATION OF ALL 24 VOLT AIR CONDITIONING CONTROL WIRING SHALL BE DONE BY THE MECHANICAL CONTRACTOR.
5. ELECTRICAL CONTRACTOR SHALL RUN LINE VOLTAGE FROM THE CURRENT SENSOR LOCATED IN THE BROILER HOOD EXHAUST FAN TO THE CONTACTOR PANEL LOCATED BY THE SWITCHGEAR.

HVAC SYSTEM

N•C•A
CONSULTANTS/GROUP

NATIONAL CORPORATE ACCOUNT SERVICES, INC.

DRAWINGS SHOWN ARE FOR PROTOTYPICAL CONSIDERATIONS ONLY. SITE–SPECIFIC DESIGN IS REQUIRED BY BURGER KING CORPORATION. AS A COURTESY, NCA CONSULTANTS PROVIDES SITE–SPECIFIC DESIGN WITH SITE–SPECIFIC PROFESSIONAL ENGINEER SEAL UNDER AN AGREEMENT BETWEEN NCA CONSULTANTS AND BURGER KING CORPORATION.

FOR SITE–SPECIFIC DESIGN, ARCHITECTS EMAIL REFLECTED CEILING PLAN, ELEVATIONS, KITCHEN PLANS, FLOOR PLAN, SITE PLAN, EXTERIOR ELEVATIONS, AND ROOF STRUCTURAL PLAN TO DESIGN@NCACONSULTANTS.COM

TO CONTACT THE NCA CONSULTANTS BY PHONE, CALL TOLL–FREE (877) 530–0078.

DATE	DESCRIPTION	BY
10-12-18	PROTOTYPE USE ONLY	KM

NOT FOR CONSTRUCTION

© Copyright 2018– Drawings, specifications, notes, database, computer files, field data, and reports as instruments of service prepared by the Design of Record. As instruments of services, these items remain the property of the Design of Record, who shall retain all statutory and other reserved rights, including the copyright thereto. Any use, reproduction or changes to these documents without written consent of NCA Consultants is a violation of federal copyright laws.

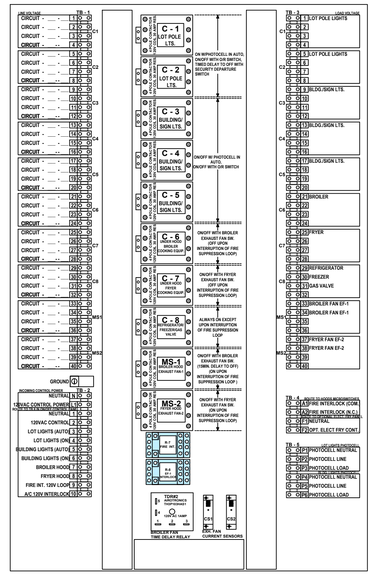

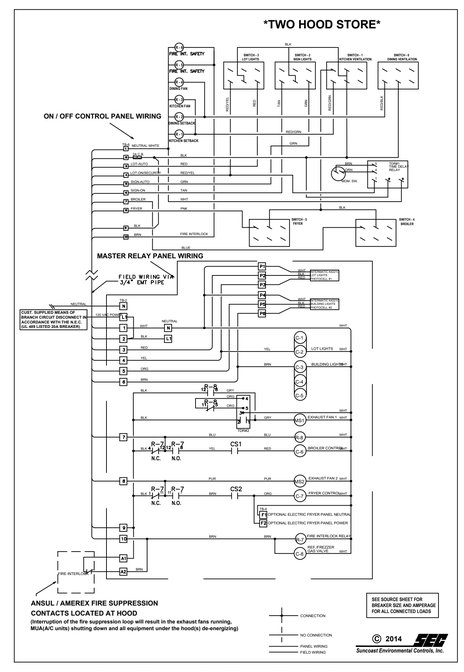

PANEL SCHEMATIC DIAGRAMS

Issued:		Date:
A	BKC Approval	10/29/2021
B	Permit Set	1/21/2022
C	Bid Set	1/24/2022
D	Construction Set	3/14/2022
E		

Revisions:		Date:
1		
2		
3		
4		
5		
6		
7		
8		
9		

Seal Seal

PROJECT ARCHITECT/ENGINEER DATE

PROJECT LEAD DATE

PROJECT DESIGNER DATE

Copyright © 2022
APD Engineering & Architecture, LLC
615 Fishers Run
Victor, NY 14564
585.742.2222

Drawing Alteration

It is a violation of law for any person, unless acting under the direction of licensed Architect, Professional Engineer, Landscape Architect, or Land Surveyor to alter any item on this document in any way. Any licensee who alters this document is required by law to affix his or her seal and to add the notation "Altered By" followed by his or her signature and the specific description of the alteration or revision.

DO NOT SCALE PLANS

Copying, Printing, Software and other processes required to produce these prints can stretch or shrink the actual paper or layout. Therefore, scaling of this drawing may be inaccurate. Contact APD E&A with any need for additional dimensions or clarifications.

APD ENGINEERING ARCHITECTURE
615 Fishers Run Victor, NY 14564
585.742.2222 - www.apd.com

Ampler Development LLC
4700 Falls of Neuse Rd
Suite 400
Raleigh, NC 27609
phone: (513) 484-0965

Burger King Inc.
Store #
322 Pottstown Ave
Pennsburg, PA 18073
Montgomery County
Project Name & Location:

Master Contractor Panel
Drawing Name:

Date: 11/8/2021	Project No. 21-0327
Type: ROC-2502T	
Drawn By: MK	E-5
Scale: As Noted	Drawing No.