GENERAL WALL SECTION AND DETAIL NOTES:

1. THE GENERAL NOTES ON THIS SHEET SHALL APPLY TO ALL SECTION AND DETAIL SHEETS IN THIS SET.
2. A.T.O.S = ABOVE TOP OF SLAB.
3. REFER TO EXTERIOR ELEVATIONS FOR ADDITIONAL INFORMATION REGARDING FINISHES AND COLOR.
4. COORDINATE WITH SIGNAGE VENDOR/INSTALLER FOR WOOD BLOCKING, POWER REQUIREMENTS, AND JUNCTION BOX LOCATIONS.
5. REFER TO INTERIOR DECOR DRAWINGS FOR INTERIOR FINISHES.
6. REFER TO EXTERIOR FINISH SCHEDULE FOR ALL EXTERIOR FINISHES.
7. INSTALL GYPSUM SUBSTRATE FROM FLOOR TO ROOF DECK AT ALL WALLS WITH EXPOSED ROOF TRUSSES.
8. REFER TO G-001 FOR INSULATION SCHEDULE.
9. INSTALL CONTINUOUS GASKETED SILL SEALER BELOW ALL SILL PLATES.

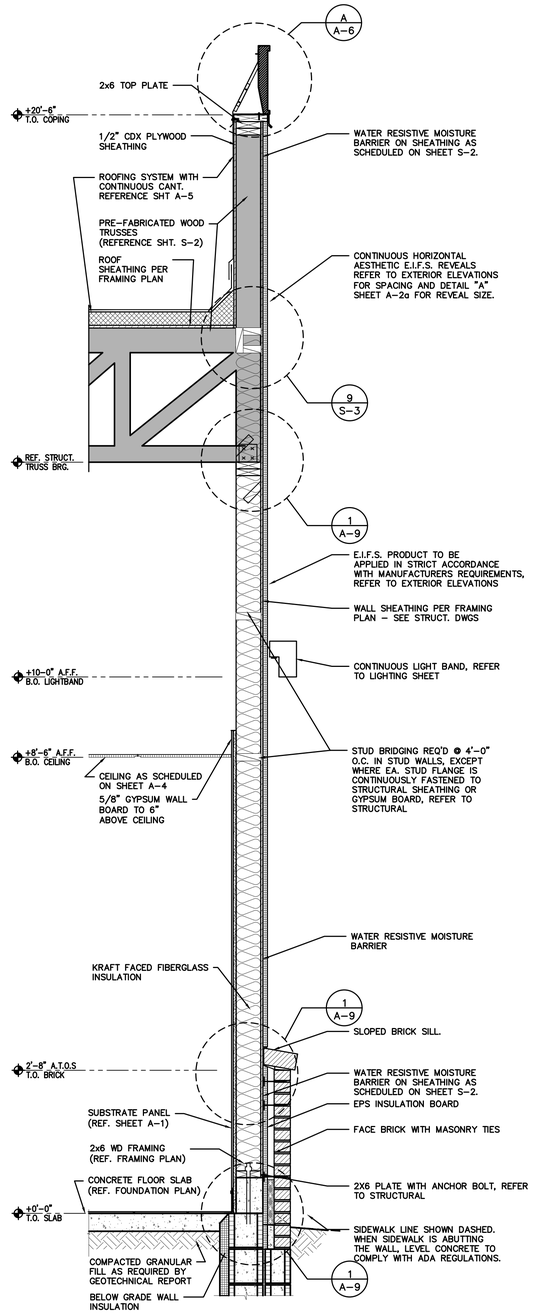

1 KITCHEN SIDE WALL
SCALE: 3/4" = 1'-0"

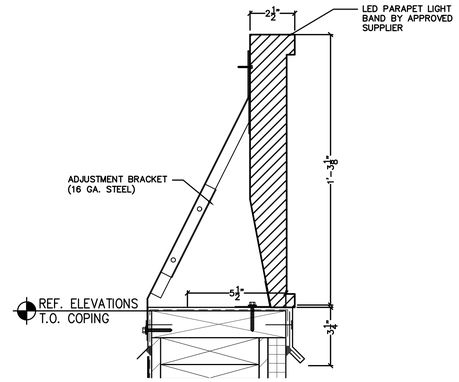

A PARAPET LIGHT BAND DETAIL
SCALE: 3" = 1'-0"

2 NOT USED
SCALE: 3/4" = 1'-0"

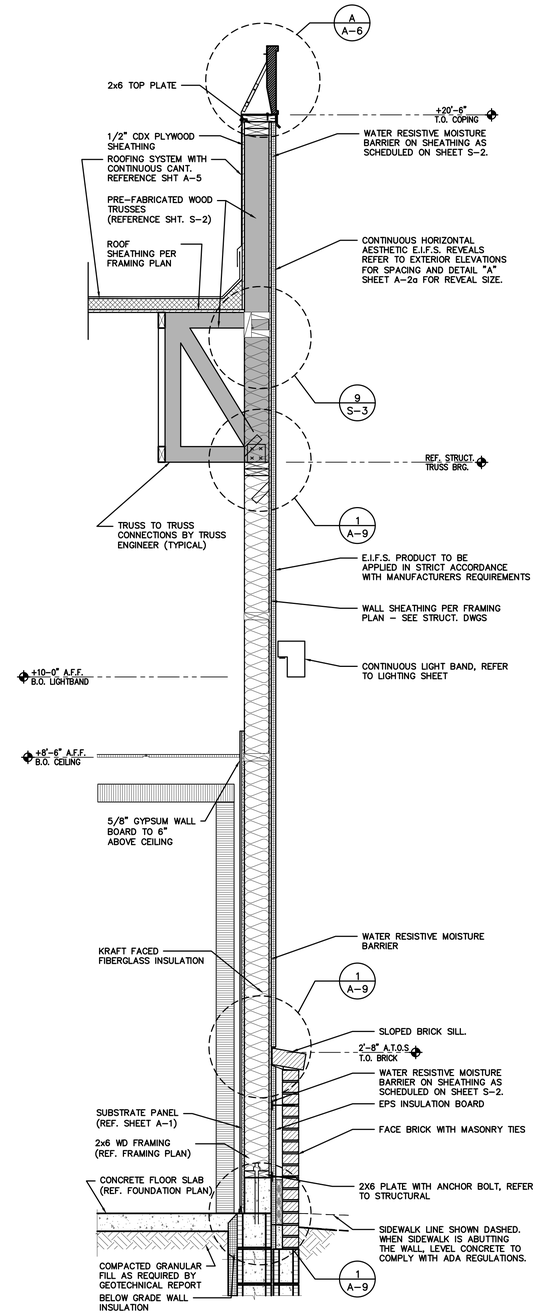

3 REAR KITCHEN WALL
SCALE: 3/4" = 1'-0"

Issued:		Date:
A	BKC Approval	10/29/2021
B	Permit Set	1/21/2022
C	Bid Set	1/24/2022
D	Construction Set	3/14/2022
E		

Revisions:		Date:
1		
2		
3		
4		
5		
6		
7		
8		
9		

Seal | Seal

PROJECT ARCHITECT/ENGINEER DATE

PROJECT LEAD DATE

PROJECT DESIGNER DATE

Copyright © 2022
APD Engineering & Architecture, LLC
615 Fishers Run
Victor, NY 14564
(585) 742-2222
www.apd.com

Drawing Alteration

It is a violation of law for any person, unless acting under the direction of licensed Architect, Professional Engineer, Landscape Architect, or Land Surveyor to alter any item on this document in any way. Any licensee who alters this document is required by law to affix his or her seal and to add the notation "Altered By" followed by his or her signature and the specific description of the alteration or revision.

DO NOT SCALE PLANS

Copying, Printing, Software and other processes required to produce these prints can stretch or shrink the actual paper or layout. Therefore, scaling of this drawing may be inaccurate. Contact APD E&A with any need for additional dimensions or clarifications.

APD ENGINEERING ARCHITECTURE
615 Fishers Run Victor, NY 14564
585.742.2222 - www.apd.com

Ampler Development LLC
4700 Falls of Neuse Rd
Suite 400
Raleigh, NC 27609
phone: (513) 484-0965

Burger King Inc.
Store #
322 Pottstown Ave
Pennsburg, PA 18073
Montgomery County
Project Name & Location:

Wall Sections and Details
Drawing Name:

Date: 11/8/2021

Type: ROC-2502T

Drawn By: ICP

Scale: As Noted

Project No. 21-0327

Drawing No. A-6

PLOTTED: 3/11/2022 2:51 PM by:3201 jobs\327 - ampler - bk xxxx - pennsburg pa\building\cad\drawings\arch