SCOOTER'S COFFEE

1490 WEST ANN ARBOR ROAD
PLYMOUTH, MI 48170

GHA
Architecture / Development
14901 Quorum Drive
Suite 300
Dallas Texas 75254
Ph: (972) 239-8884
Fax: (972) 239-5054

STATE OF MICHIGAN
KEVIN J. HENDERSON
ARCHITECT
No. 4001054109
LICENSED ARCHITECT
12/21/2021

DRAFTING SYMBOLS

DIMENSION LINE — 2" — TO FACE OF FRAMING OR CENTERLINE OF STRUCTURE

SECTION — SECTION DESIGNATION — SHEET NUMBER

DETAIL — DETAIL NUMBER — SHEET NUMBER

EXTERIOR ELEVATION — ELEVATION DESIGNATION — SHEET NUMBER

INTERIOR ELEVATION — ELEVATION DESIGNATION — SHEET NUMBER

PARTITION TYPE

DOOR IDENTIFICATION — DOOR #

WINDOW IDENTIFICATION

EQUIPMENT IDENTIFICATION

ROOM NAME AND NUMBER — ROOM NAME — ROOM NUMBER

KEYNOTE REFERENCE

ELEVATION MARKER — DESCRIPTION

REVISION

FINISH TYPE MARKER

COLUMN OR GRID LINE

KEY FOR ENLARGED PLAN

EXISTING ABBREVIATION — (E)

RCP HEIGHT MARKER — +8'-0"

PROJECT TEAM

CORPORATE: **SCOOTER'S COFFEE**
KIMBERLY WILLIFORD
10500 SAPP BROTHERS DRIVE
OMAHA, NE 68138
T: 913.375.5256
E: KIM.WILLIFORD@SCOOTERSCOFFEE.COM

FRANCHISEE: COFFEE CAPITAL & DEVELOPMENT, LLC
17811 CRANBROOK DRIVE
NORTHVILLE, MI 48168
CONTACT: BRYAN BENDER
T: 248.419.3810
E: BBENDER@FORTISNETLEASE.COM

ACHITECT: GERDES HENRICHSON & ASSOCIATES LTD., L.L.P.
14901 QUORUM DRIVE, STE 300
DALLAS, TEXAS 75254
CONTACT: DARYL ATWOOD
T: 972.239.8884
E: DATWOOD@GHA-ARCHITECTS.COM

CIVIL ENGINEER: PROGRESSIVE AE
1811 4 MILE RD NE
GRAND RAPIDS, MI 49525
CONTACT: JOSHUA MANION
T: 616.447.3455
O: 616.361.2664
E: MANIONJ@PROGRESSIVEAE.COM

STRUCTURAL ENGINEER: RONALD A. ROBERTS STRUCTURAL ENGINEERS
2948 N. STEMMONS FREEWAY
DALLAS, TX 75247
CONTACT: CRAIG BAILEY
T: 214.637.6299
E: CBAILEY@RARA.NET

MECHANICAL/ ELECTRICAL/ PLUMBING ENGINEERS: GHC ENGINEERS
14901 QUORUM DRIVE, STE 300
DALLAS, TEXAS 75254
CONTACT: GRANT CLAUSSEN
T: 214.915.8737
E: GCLAUSSEN@GHCENGINEERS.COM

VICINITY MAP

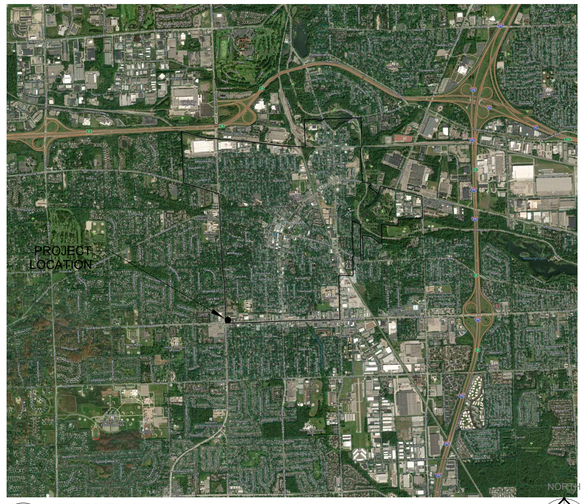

1 VICINITY MAP
SCALE: N.T.S.

SHEET INDEX

SHEET #	SHEET TITLE	12/21/2021 1ST SUBMITTAL
ARCHITECTURAL		
G0.1	COVER SHEET	●
G0.2	LIFE SAFETY / OCCUPANCY PLAN	●
G0.3	ACCESSIBILITY NOTES & DETAILS	●
G0.4	RESPONSIBILITY SCHEDULE & ENERGY COMPLIANCE	●
G0.5	ENERGY COMPLIANCE	●
G1.1	ARCHITECTURAL SPECIFICATIONS	●
G1.2	ARCHITECTURAL SPECIFICATIONS	●
A1.1	ARCHITECTURAL SITE PLAN	●
A2.1	DIMENSION / FLOOR PLAN	●
A2.2	FINISH PLAN & FINISH SCHEDULE	●
A2.4	REFLECTED CEILING PLAN & ROOF PLAN	●
A2.5	ENLARGED RESTROOM PLAN & ELEVATIONS	●
A3.1	EXTERIOR ELEVATIONS	●
A3.2	EXTERIOR ELEVATIONS	●
A3.3	INTERIOR ELEVATIONS	●
A4.1	BUILDING SECTIONS	●
A4.2	WALL SECTIONS	●
A4.3	WALL SECTIONS	●
A4.4	WALK-UP WINDOW SECTION/DETAILS	●
A5.1	WINDOW SCHEDULE	●
A5.2	DOOR SCHEDULE	●
A6.1	TRASH ENCLOSURE ELEVATIONS & DETAILS	●
A6.2	SITE DETAILS	●
A6.3	WALL DETAILS	●
A6.4	TPO ROOF DETAILS	●
A6.6	MONUMENT SIGN DETAILS	●
A6.7	DOOR/ WINDOW DETAILS	●
A6.8	INTERIOR DETAILS	●
KITCHEN		
K1.0	EQUIPMENT PLAN & SCHEDULE	●
K2.0	EQUIPMENT PLUMBING ROUGH-IN PLAN	●
K3.0	EQUIPMENT ELECTRICAL ROUGH-IN PLAN	●
K4.0	EQUIPMENT ELEVATIONS	●
CIVIL		
C0.0	COVER SHEET	●
C1.0	EXISTING CONDITIONS & DEMOLITION PLAN	●
C2.0	EROSION PLAN	●
C3.0	SITE PLAN	●
C4.0	GRADING PLAN	●
C5.0	UTILITY PLAN	●
C6.0	CONSTRUCTION DETAILS	●
C6.1	UTILITY DETAILS	●
STRUCTURAL		
S1.1	GENERAL STRUCTURAL NOTES	●
S1.2	TYPICAL DETAILS	●
S1.3	TYPICAL DETAILS	●
S2.1	FOUNDATION PLAN / ROOF FRAMING PLAN SCHEDULE	●
S3.1	FOUNDATION AND FRAMING DETAILS	●
MECHANICAL		
M1.0	MECHANICAL SPECIFICATIONS	●
M1.02	MECHANICAL LEGENDS, NOTES, & ABBREVIATIONS	●
M1.03	MECHANICAL DETAILS	●
M1.04	MECHANICAL COMCHECK	●
M1.05	MECHANICAL COMCHECK	●
M2.01	MECHANICAL FLOOR PLAN & SCHEDULES	●
PLUMBING		
P1.01	PLUMBING SPECIFICATIONS	●
P1.02	PLUMBING LEGENDS AND SCHEDULES	●
P1.03	PLUMBING DETAILS	●
P2.01	SANITARY SEWER FLOOR PLAN & RISER DIAGRAM	●
P2.02	WATER SUPPLY FLOOR PLAN & RISER DIAGRAM	●
ELECTRICAL		
E0.01	ELECTRICAL SITE PLAN	●
E1.01	ELECTRICAL SPECIFICATIONS	●
E1.02	ELECTRICAL PANELBOARD, ONE LINE DIAGRAM, NOTES & CALCULATIONS	●
E1.03	ELECTRICAL DETAILS	●
E1.04	ELECTRICAL COMCHECK	●
E2.01	LIGHTING FLOOR PLAN, NOTES, & SCHEDULES	●
E2.02	POWER FLOOR PLAN, NOTES & SCHEDULES	●

FOR REFERENCE: C0.0 – E2.02

GENERAL NOTES

A. GENERAL CONTRACTOR SHALL VISIT THE SITE, REVIEW THE DRAWINGS AND BECOME THOROUGHLY FAMILIAR WITH THE SITE CONDITIONS PRIOR TO CONSTRUCTION.

B. GENERAL CONTRACTOR SHALL CONSULT WITH THE CLIENT AND ARCHITECT TO RESOLVE ANY CHANGES, OMISSIONS OR PLAN DISCREPANCIES PRIOR TO CONSTRUCTION.

C. ALL WORK SHALL BE PERFORMED IN STRICT COMPLIANCE WITH LOCAL, COUNTY, STATE AND FEDERAL CODES AND ORDINANCES.

D. GENERAL CONTRACTOR SHALL VERIFY THE LOCATIONS OF ALL UTILITIES.

E. GENERAL CONTRACTOR TO VERIFY ALL DIMENSIONS, INCLUDING CLEARANCES REQUIRED BY OTHER TRADES AND NOTIFY ARCHITECT OF ANY DISCREPANCIES PRIOR TO PROCEEDING WITH WORK. ALL DIMENSIONS ARE TO THE FACE OF FRAMING UNLESS NOTED OTHERWISE.

F. GENERAL CONTRACTOR SHALL PATCH AND REPAIR ALL EXISTING WALLS, FLOORS, CEILINGS, OR OTHER SURFACES IDENTIFIED TO REMAIN THAT MAY BECOME DAMAGED DURING THE COURSE OF WORK.

G. GENERAL CONTRACTOR IS RESPONSIBLE FOR OBTAINING PERMITS FOR FIRE PROTECTION, FIRE ALARM, OR SPECIALTY SYSTEMS PRIOR TO INSTALLATION OF SUCH SYSTEMS.

H. GENERAL CONTRACTOR SHALL RETAIN ONE SET OF PERMIT PLANS ON-SITE TO DOCUMENT ALL CHANGES MADE DURING CONSTRUCTION. THE RECORD DRAWINGS SHALL BE ISSUED TO THE CLIENT AT PROJECT CLOSE-OUT AS DESCRIBED IN THE GENERAL REQUIREMENTS OF THE PROJECT MANUAL.

I. GENERAL CONTRACTOR IS RESPONSIBLE FOR COORDINATING DELIVERY OF MATERIALS AND INSTALLING SUCH MATERIALS SUPPLIED BY CLIENT OR CLIENT'S VENDOR.

J. RESPONSIBILITY FOR SUPPLY AND DELIVERY OF MATERIALS AND EQUIPMENT IS IDENTIFIED IN THE DRAWING SCHEDULE SHEETS UNDER THE COLUMN LABELED "RESPONSIBILITY".

K. FOR THE PURPOSE OF THE DOCUMENTS, TO "INSTALL" SHALL MEAN TO PROVIDE ALL FASTENERS, MISCELLANEOUS HARDWARE, BLOCKING, ELECTRICAL CONNECTIONS, PLUMBING CONNECTIONS AND OTHER ITEMS REQUIRED FOR A COMPLETE AND OPERATIONAL INSTALLATION UNLESS OTHERWISE NOTED.

L. ALL ITEM SUBSTITUTIONS MUST BE APPROVED BY CLIENT AND ARCHITECT.

SUBMITTALS

- SIGNAGE UNDER A SEPARATE SUBMITTAL AND PERMIT
- AWNING UNDER A SEPARATE SUBMITTAL AND PERMIT

PROJECT DATA

PROJECT INFORMATION

PROJECT NAME:	SCOOTERS COFFEE KIOSK BUILDING
PROJECT DESCRIPTION:	NEW KIOSK BUILDING WITH DRIVE-THRU SERVICE
PROJECT LOCATION:	1490 ANN ARBOR ROAD W PLYMOUTH, MI 48170
PARCEL NUMBER:	49-010-99-0013-301
LEGAL DESCRIPTION:	34G2A1A G2A2B1B PT OF THE NE 1/4 SEC 34 T1S R8E DESC AS BEG N 00DEG 21M 20S E 53 FT AND S 89DEG 40M 50S E 60 FT FROM CEN 1/4 COR OF SEC 34 TH N 00DEG 21M 20S E 175 FT THE S 89DEG 40M 50S E 133 FT TH S 00DEG 21M 20S W 175 FT TH N 89DEG 40M 50S W 133 FT TO THE POB APPROX .53 AC.
JURISDICTION:	COMMUNITY DEVELOPMENT, CITY OF PLYMOUTH 201 S. MAIN PLYMOUTH, MI 48170 T: 734.453.1234 EXT. 232

GOVERNING CODES

ALL WORK SHALL BE IN COMPLIANCE WITH, BUT NOT LIMITED TO THE REQUIREMENTS OF THE FOLLOWING AND ANY OTHER STATE AND LOCAL CODES HAVING JURISDICTION:

BUILDING:	2015 INTERNATIONAL BUILDING CODE (IBC)
PLUMBING:	2015 INTERNATIONAL PLUMBING CODE (IPC)
MECHANICAL:	2012 INTERNATIONAL MECHANICAL CODE (IMC)
FIRE:	2015 INTERNATIONAL FIRE CODE (IFC)
ELECTRICAL:	2014 NATIONAL ELECTRIC CODE (NEC)
ENERGY:	2015 INTERNATIONAL ENERGY CONSERVATION CODE
ACCESSIBILITY:	2009 ANSI A117.1-2009 ACCESSIBLE AND USABLE BUILDINGS AND FACILITIES; 2010 ADAAG ADA ACCESSIBILITY GUIDELINES

SITE INFORMATION

SITE AREA:	.589 ACRES
ZONING:	ARC (ANN ARBOR ROAD CORRIDOR)

PARKING

PARKING PROVIDED:	7 SPACES INCLUDING 1 ADA

BUILDING INFORMATION

BUILDING SETBACKS:	FRONT: 40', SIDES 25' (ADJ. TO RESIDENTIAL, 50' & ADJ. TO STREET 40'), READ 40' (ADJ. TO RESIDENTIAL 50')
BUILDING HEIGHT:	19'-0"
BUILDING AREA:	675 SQ.FT.
CONSTRUCTION TYPE:	V-B
OCCUPANCY CLASSIFICATION:	B

OCCUPANTS

OCCUPANCY CLASSIFICATION:	B
BARISTA / BACK OF HOUSE:	605 SQ.FT. / 1:200 = 4
RESTROOM:	70 SQ.FT. / 0 = 0
TOTAL OCCUPANTS:	4 OCCUPANTS MAXIMUM

EXIT REQUIREMENTS

EXITS REQUIRED:	1 EXIT
EXITS PROVIDED:	1 EXIT

PROJECT ADDRESS:
1490 WEST ANN ARBOR ROAD
PLYMOUTH, MI 48170

REVISIONS:

TITLE:
COVER SHEET

DATE:
12/21/2021

PROJECT NO.
210536

☐ DESIGN DEVELOPMENT
☒ PERMIT SUBMITTAL
☒ BID PACKAGE
☐ CONSTRUCTION ISSUE

SHEET NO.
G0.1

THIS DRAWING AND ITS CONTENTS ARE THE COPYRIGHTED PROPERTY OF GHA ARCHITECTS USE THEREOF IS LIMITED TO THE SPECIFIC PROJECT AND SITE SET FORTH ABOVE, AND MAY NOT BE OTHERWISE USED OR REPRODUCED, IN WHOLE OR IN PART, WITHOUT THE WRITTEN PERMISSION OF GHA ARCHITECTS, THE ARCHITECT. THIS DRAWING IS TO BE RETURNED UPON REQUEST.

OCCUPANT LOAD AND EGRESS ANALYSIS

	USE	AREA	LOAD FACTOR	OCCUPANTS
	FOOD PREP	605 SF	1:200	4
	RESTROOMS	70 SF		0

TOTAL OCCUPANTS: 4

EXIT WIDTH CALCULATIONS:
4 OCCUPANTS x.2 = .8" REQUIRED - 36" PROVIDED

OCCUPANT LOAD IS 4 AND ONE EXIT IS REQUIRED, ONE IS PROVIDED.

ALLOWABLE PATH OF TRAVEL WITHOUT A SPRINKLER SYSTEM: 75'-0"
MAXIMUM PATH OF TRAVEL: 39'-8"

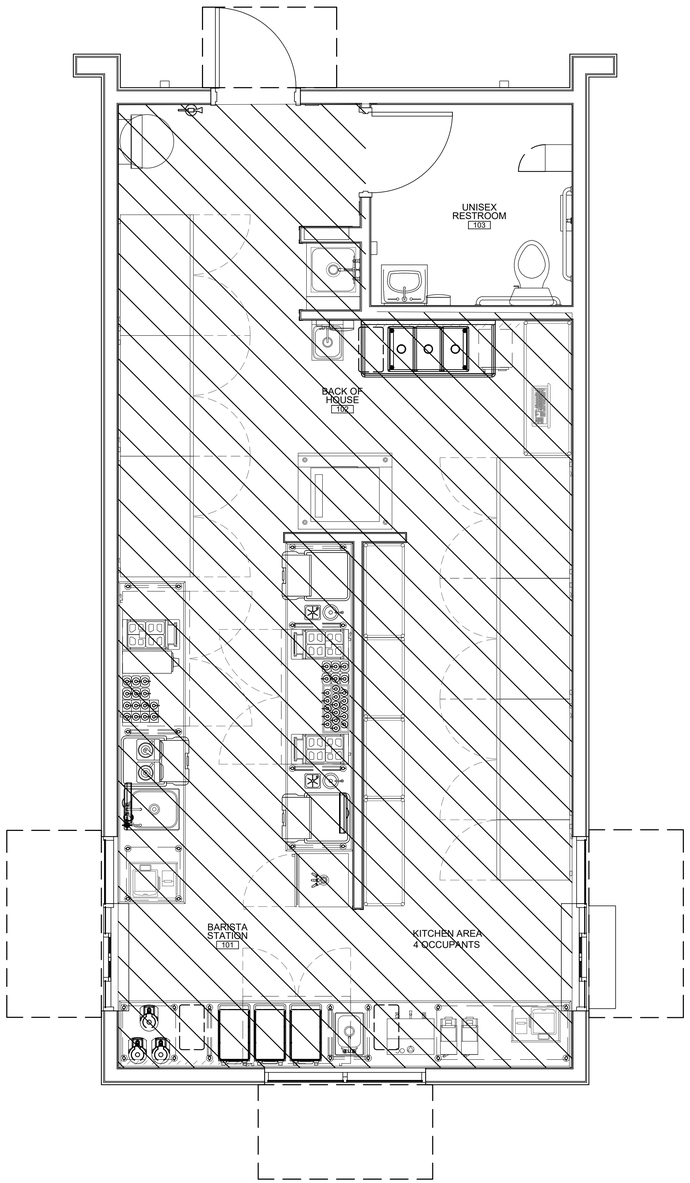

2 OCCUPANCY PLAN
SCALE: 3/8" = 1'-0"

NORTH

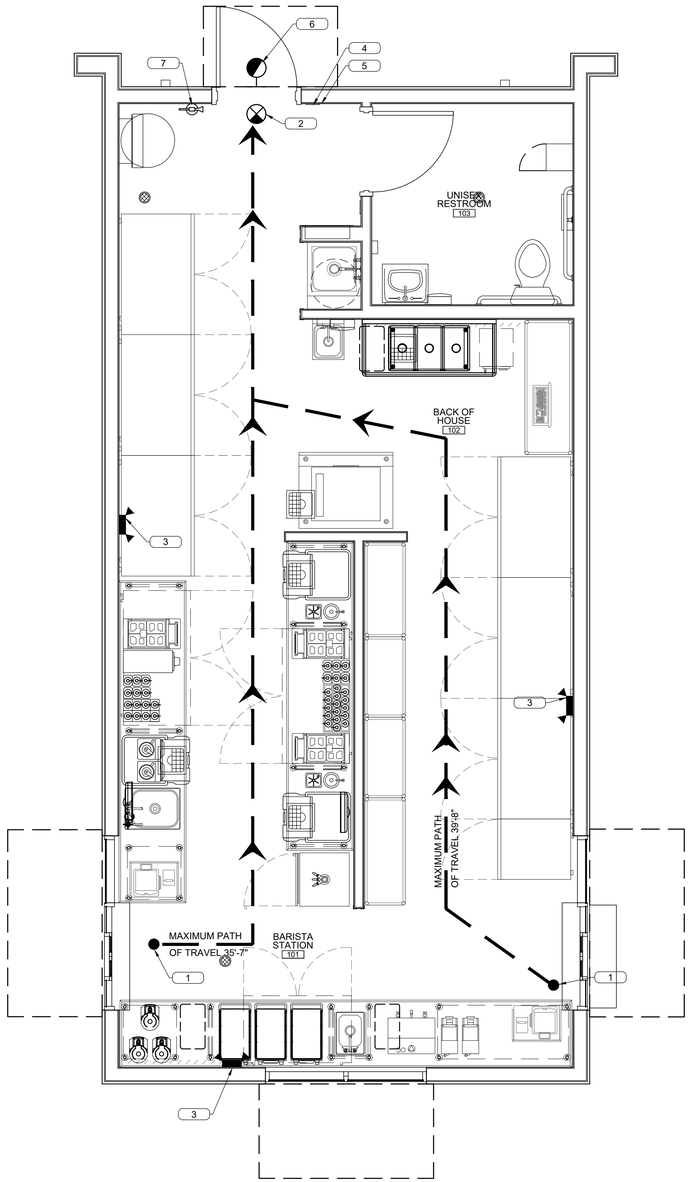

1 LIFE SAFETY PLAN
SCALE: 3/8" = 1'-0"

NORTH

GENERAL NOTES

1. CONTRACTOR TO PROVIDE A SUFFICIENT NUMBER OF 2A10BC RATED FIRE EXTINGUISHERS DURING CONSTRUCTION SO THAT ALL PORTIONS OF THE BUILDING ARE WITHIN 75 FT. TRAVEL DISTANCE OF SAID EXTINGUISHER & SO THAT AT LEAST ONE 2A10BC RATED FIRE EXTINGUISHER IS PROVIDED FOR EACH 3,000 SQ. FT. OF FLOOR SPACE OR PORTION THEREOF.
2. PROVIDE FIRE EXTINGUISHERS AS REQUIRED BY FIRE DEPARTMENT FIELD INSPECTOR DURING CONSTRUCTION & FOR COMPLETED PROJECT.
3. EXIT DOORS
   - 3.1. ALL EXIT DOORS SHALL SWING IN THE DIRECTION OF TRAVEL.
   - 3.2. ALL EXIT DOORS SHALL BE OPENABLE FROM THE INSIDE WITHOUT SPECIAL KNOWLEDGE OR EFFORT (NO BOLTS, NO SLIDING BOLTS, ETC.).
   - 3.3. ALL EXIT DOORS & INTERVENING DOORS ON THE EXIT PATH, IF PROVIDED WITH A LOCK OR LATCH, MUST BE MARKED " THIS DOOR TO REMAIN UNLOCKED WHEN THIS SPACE IS OCCUPIED".
   - 3.4. PROVIDE ILLUMINATED EXIT SIGNS ABOVE EXITS WITH MIN. 3/4"x6" LETTERS LIGHTED ON CONTRASTING BACKGROUND.
4. EXIT SIGNS
   - 4.1. EXIT SIGNS SHALL BE INTERNALLY OR EXTERNALLY ILLUMINATED
   - 4.2. EXIT SIGNS ILLUMINATED BY AN EXTERNAL SOURCE SHALL HAVE AN INTENSITY OF NOT LESS THAN 5 FOOT CANDLES (54 LUX).
   - 4.3. INTERNALLY ILLUMINATED SIGNS SHALL BE LISTED AND LABELED AND SHALL BE INSTALLED IN ACCORDANCE WITH THE MANUFACTURER'S INSTRUCTIONS AND SECTION 2702.
   - 4.4. EXIT SIGNS SHALL BE ILLUMINATED AT ALL TIMES. (1011.3)
   - 4.5. EXIT SIGNS SHALL BE CONNECTED TO AN EMERGENCY POWER SYSTEM THAT WILL PROVIDE AN ILLUMINATION OF NOT LESS THAN 90 MIN. IN CASE OF PRIMARY POWER LOSS (1011.6.3).
5. EGRESS EMERGENCY LIGHTING
   - 5.1. THE MEANS OF EGRESS, INCLUDING THE EXIT DISCHARGE, SHALL BE ILLUMINATED AT ALL TIMES THE BUILDING SPACE SERVED BY THE MEANS OF EGRESS IS OCCUPIED.
   - 5.2. THE MEANS OF EGRESS ILLUMINATION LEVEL SHALL NOT BE LESS THAN 1 FOOT-CANDLE AT THE WALKING SURFACE.
   - 5.3. THE POWER SUPPLY FOR MEANS OF EGRESS ILLUMINATION SHALL NORMALLY BE PROVIDED BY THE PREMISES' ELECTRICAL SUPPLY IN THE EVENT OF SUPPLY; FAILURE AN EMERGENCY ELECTRICAL SYSTEM SHALL AUTOMATICALLY ILLUMINATE.
6. UNLESS ALREADY EXISTING, AN APPROVED SET OF NUMERALS, MINIMUM 4" HIGH WITH A STROKE WIDTH NOT LESS THAN 1/2 INCH, SHALL BE PLACED ON THE BUILDING. THE NUMBERING SHALL BE PLAINLY VISIBLE & LEGIBLE FROM THE STREET OR ROAD FRONTING THE PROPERTY. SAID NUMERALS SHALL CONTRAST W/ THEIR BACKGROUND. IF THE ADDRESS THAT IS POSTED NEAR THE INTERSECTION OF THE DRIVEWAY & THE PUBLIC STREET OR ROAD FRONTING THE PROPERTY IS NOT VISIBLE, ADDITIONAL ADDRESSES POSTED NEAR THE INTERSECTION OF THE DRIVEWAY & THE PUBLIC STREET ARE REQUIRED. (VERIFY REQUIREMENTS.)
7. PROVIDE A KNOX BOX FOR FIRE DEPT. ACCESS & KEY ACCESS, LOCATION IF REQUIRED BY FIRE MARSHAL.
8. GENERAL CONTRACTOR SHALL SECURE PERMITS REQUIRED BY THE FIRE DEPARTMENT FROM THE FIRE DEPARTMENT PRIOR TO OCCUPYING THIS BUILDING.
9. PROVIDE ALL WEATHER ACCESS ROAD (MIN 20') TO ALL BUILDINGS & HYDRANTS FROM PUBLIC WAY DURING CONSTRUCTION.

KEYNOTES

X

1. EXIT PATH OF TRAVEL
2. EXIT SIGN, SEE ELECTRICAL DRAWINGS AND REFLECTED CEILING PLAN
3. EMERGENCY LIGHTING, SEE ELECTRICAL DRAWINGS AND REFLECTED CEILING PLAN
4. TACTILE EXIT SIGNS
5. OCCUPANT LOAD SIGN. FINAL LOCATION APPROVED BY FIRE MARSHALL
6. EXTERIOR EXIT LIGHT, SEE ELECTRICAL DRAWING AND REFLECTED CEILING PLAN
7. FIRE EXTINGUISHER PER FIRE MARSHALL APPROVAL

LEGEND

- NEW EMERGENCY LIGHT
- EXTERIOR EMERGENCY LIGHT
- NEW EXIT SIGN, CONFIRM LOCATION REQUIREMENTS WITH FIRE MARSHAL
- EGRESS PATH OF TRAVEL
- 2A - 10BC MINIMUM RATED FIRE EXTINGUISHER - WALL HUNG

GHA
Architecture / Development
14901 Quorum Drive
Suite 300
Dallas Texas 75254
Ph: (972) 239-8884
Fax: (972) 239-5054

STATE OF MICHIGAN
KEVIN HENDERSON
ARCHITECT
No. 6501054019
LICENSED ARCHITECT
12/21/2021

EST. 1998
SCOOTER'S COFFEE

PROJECT ADDRESS:
1490 WEST ANN ARBOR ROAD
PLYMOUTH, MI 48170

REVISIONS:

TITLE:
LIFE SAFETY & OCCUPANCY PLAN

DATE:
12/21/2021

PROJECT NO.
210536

- ☐ DESIGN DEVELOPMENT
- ☒ PERMIT SUBMITTAL
- ☒ BID PACKAGE
- ☐ CONSTRUCTION ISSUE

SHEET NO.
G0.2

THIS DRAWING AND ITS CONTENTS ARE THE COPYRIGHTED PROPERTY OF GHA ARCHITECTS USE THEREOF IS LIMITED TO THE SPECIFIC PROJECT AND SITE SET FORTH ABOVE, AND MAY NOT BE OTHERWISE USED OR REPRODUCED, IN WHOLE OR IN PART, WITHOUT THE WRITTEN PERMISSION OF GHA ARCHITECTS, THE ARCHITECT. THIS DRAWING IS TO BE RETURNED UPON REQUEST.

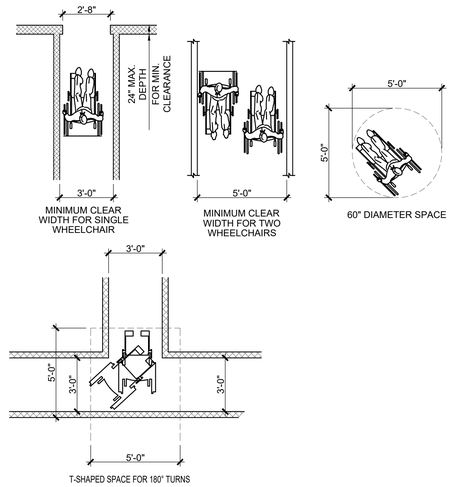

13 CLEAR FLOOR SPACE

SCALE: NTS

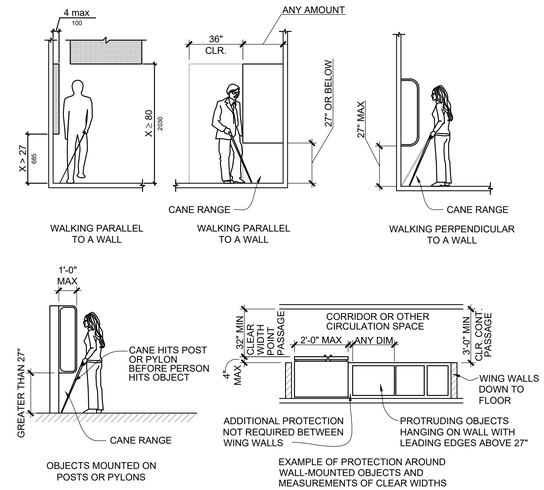

9 PROTRUDING OBJECTS

SCALE: NTS

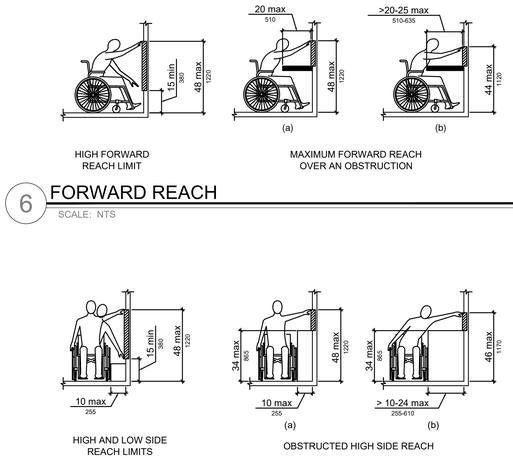

6 FORWARD REACH

SCALE: NTS

5 SIDE REACH

SCALE: NTS

NOTE:
CHANGES IN LEVEL GREATER THAN 1/2" SHALL BE BY MEANS OF A RAMP.

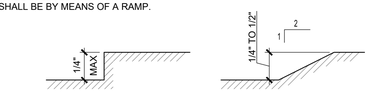

4 CHANGE IN LEVEL

SCALE: NTS

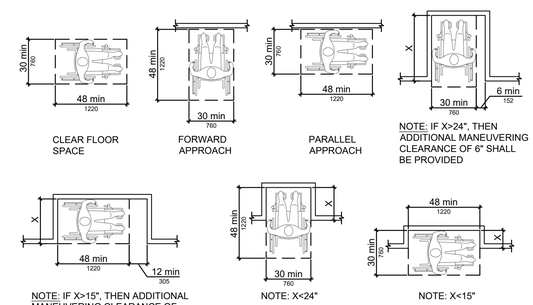

3 MANEUVERING ACCESS

SCALE: NTS

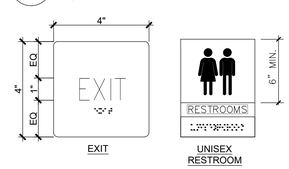

BRAILLE SHALL BE MOUNTED 48" MINIMUM, AND 60" MAXIMUM ABOVE THE FLOOR, MEASURED TO THE BASELINE OF THE BRAILLE CELLS. RAISED CHARACTERS SHALL BE 48" MINIMUM TO THE BASELINE OF THE LOWEST RAISED CHARACTER AND 60" MAXIMUM TO THE HIGHEST RAISED CHARACTER. AN 18" X 18" CLEAR SPACE IS REQUIRED IN FRONT OF THE TACTILE SIGN, BEYOND THE ARC OF ANY DOOR SWING.

2 TACTILE SIGNAGE

SCALE: NTS

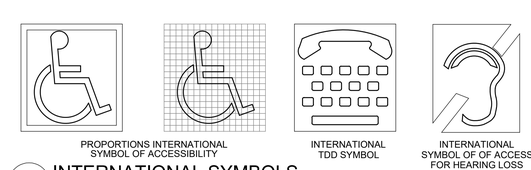

1 INTERNATIONAL SYMBOLS

SCALE: NTS

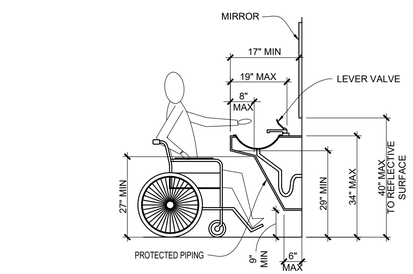

12 LAVATORY CLEARANCES

SCALE: NTS

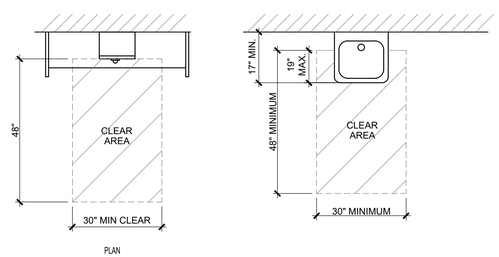

11 CLEAR FLOOR SPACE

SCALE: NTS

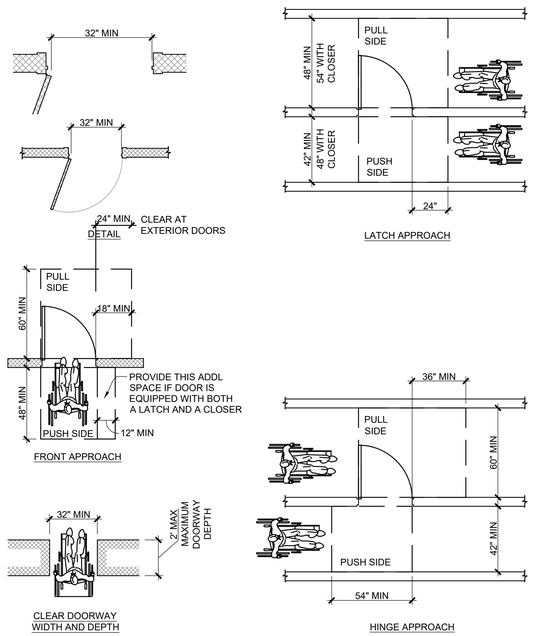

8 MANEUVERING CLEARANCES AT DOORWAY/DOORS

SCALE: NTS

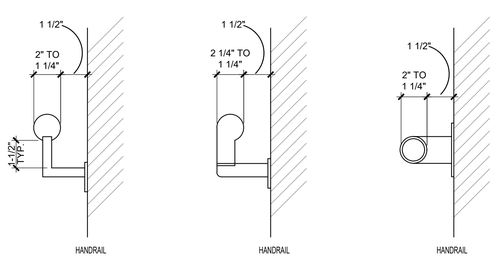

10 SIZE AND SPACING OF HANDRAILS AND GRAB BARS

SCALE: NTS

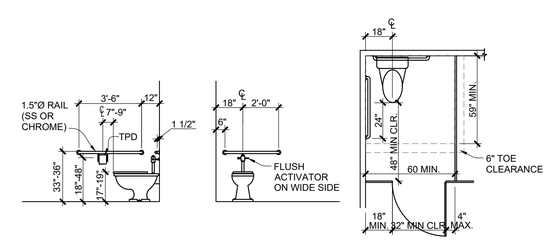

7 RESTROOM CLEARANCES

SCALE: NTS

THIS DRAWING AND ITS CONTENTS ARE THE COPYRIGHTED PROPERTY OF GHA ARCHITECTS AND THE SPECIFIC PROJECT AND SITE SET FORTH ABOVE, AND MAY NOT BE OTHERWISE USED OR REPRODUCED, IN WHOLE OR IN PART, WITHOUT THE WRITTEN PERMISSION OF GHA ARCHITECTS. THE ARCHITECT. THIS DRAWING IS TO BE RETURNED UPON REQUEST.

GHA
Architecture / Development
14901 Quorum Drive
Suite 300
Dallas Texas 75254
Ph: (972) 239-8884
Fax: (972) 239-5054

STATE OF MICHIGAN
KEVIN HENDERSON
ARCHITECT
No. 4501054109
LICENSED ARCHITECT
12/21/2021

EST. 1998
SCOOTER'S COFFEE

PROJECT ADDRESS:
1490 WEST ANN ARBOR ROAD
PLYMOUTH, MI 48170

REVISIONS:

TITLE:
ACCESSIBILITY NOTES & DETAILS

DATE:
12/21/2021

PROJECT NO.
210536

- ☐ DESIGN DEVELOPMENT
- ☒ PERMIT SUBMITTAL
- ☒ BID PACKAGE
- ☐ CONSTRUCTION ISSUE

SHEET NO.
G0.3

THIS DRAWING AND ITS CONTENTS ARE THE COPYRIGHTED PROPERTY OF GHA ARCHITECTS USE THEREOF IS LIMITED TO THE SPECIFIC PROJECT AND SITE SET FORTH ABOVE, AND MAY NOT BE OTHERWISE USED OR REPRODUCED, IN WHOLE OR IN PART, WITHOUT THE WRITTEN PERMISSION OF GHA ARCHITECTS, THE ARCHITECT. THIS DRAWING IS TO BE RETURNED UPON REQUEST.

COM*check* Software Version COMcheckWeb

Envelope Compliance Certificate

Project Information

Energy Code:	2015 IECC
Project Title:	Scooter's - Plymouth, MI - Proto - 4.0
Location:	Plymouth (Wayne), Michigan
Climate Zone:	5a
Project Type:	New Construction
Vertical Glazing / Wall Area:	10%

Construction Site:
1490 West Ann Arbor
Plymouth, Michigan 48170

Owner/Agent:
Bryan Bender
Coffee Capital & Development, LLC
17811 Cranbrook Drive
Northville, Michigan 48168
(248) 419-3810
bbender@fortisnetlease.com

Designer/Contractor:
Daryl Atwood
GHA Architects
14901 Quorum Drive, Ste. 300
DALLAS, Texas 75254
972.239.8884
datwood@gha-architects.com

Additional Efficiency Package(s)

Credits: 1.0 Required 1.0 Proposed
Reduced Lighting Power, 1.0 credit

Building Area	Floor Area
1-Dining: Bar Lounge/Leisure : Nonresidential	664

Envelope Assemblies

Assembly	Gross Area or Perimeter	Cavity R-Value	Cont. R-Value	Proposed U-Factor	Budget U-Factor(a)
Roof: Insulation Entirely Above Deck, [Bldg. Use 1 - Dining: Bar Lounge/Leisure]	608	---	30.0	0.032	0.032
Floor: Unheated Slab-On-Grade, Vertical 2 ft., [Bldg. Use 1 - Dining: Bar Lounge/Leisure] (d)	111	---	10.0	0.540	0.540
NORTH					
Ext. Wall: Wood-Framed, 16in. o.c., [Bldg. Use 1 - Dining: Bar Lounge/Leisure]	217	20.0	0.0	0.064	0.064
Door: Insulated Metal, Swinging, [Bldg. Use 1 - Dining: Bar Lounge/Leisure]	24	---	---	0.770	0.370
EAST					
Ext. Wall: Wood-Framed, 16in. o.c., [Bldg. Use 1 - Dining: Bar Lounge/Leisure]	475	20.0	0.0	0.064	0.064
Window: Other Window: Fixed, Perf. Specs.: Product ID Spandrel - NA, SHGC 0.01, PF 0.56, [Bldg. Use 1 - Dining: Bar Lounge/Leisure] (c)	20	---	---	0.050	0.380
Window: Metal Frame with Thermal Break: Fixed, Perf. Specs.: Product ID n/a, SHGC 0.25, PF 0.56, [Bldg. Use 1 - Dining: Bar Lounge/Leisure] (c)	19	---	---	0.280	0.380
SOUTH					
Ext. Wall: Wood-Framed, 16in. o.c., [Bldg. Use 1 - Dining: Bar Lounge/Leisure]	230	20.0	0.0	0.064	0.064
Window: Metal Frame with Thermal Break: Fixed, Perf. Specs.: Product ID n/a, SHGC 0.25, PF 0.56, [Bldg. Use 1 - Dining: Bar Lounge/Leisure] (c)	36	---	---	0.280	0.380

Assembly	Gross Area or Perimeter	Cavity R-Value	Cont. R-Value	Proposed U-Factor	Budget U-Factor(a)
WEST					
Ext. Wall: Wood-Framed, 16in. o.c., [Bldg. Use 1 - Dining: Bar Lounge/Leisure]	475	20.0	0.0	0.064	0.064
Window: Metal Frame with Thermal Break: Fixed, Perf. Specs.: Product ID n/a, SHGC 0.25, PF 0.56, [Bldg. Use 1 - Dining: Bar Lounge/Leisure] (c)	39	---	---	0.280	0.380

(a) Budget U-factors are used for software baseline calculations ONLY, and are not code requirements.
(b) 'Other' components require supporting documentation for proposed U-factors.
(c) Fenestration product performance must be certified in accordance with NFRC and requires supporting documentation.
(d) Slab-On-Grade proposed and budget U-factors shown in table are F-factors.

Envelope PASSES: Design 4% better than code

Envelope Compliance Statement

Compliance Statement: The proposed envelope design represented in this document is consistent with the building plans, specifications, and other calculations submitted with this permit application. The proposed envelope systems have been designed to meet the 2015 IECC requirements in COM*check* Version COMcheckWeb and to comply with any applicable mandatory requirements listed in the Inspection Checklist.

Tara Thornberry, Project Manager — Signature — 12/15/2021
Name - Title — Date

RESPONSIBILITY SCHEDULE - CORPORATE LOCATION

	SUPPLIED BY	INSTALLED BY	FINAL CONNECT	REMARKS
BUILDING PERMIT	C			
SIGNAGE PERMIT (EXTERIOR) & SIGN INSTALL	SC	SC	GC	6
PERMIT FEES- CITY BUILDING/DEVELOPMENT/SAFETY, STATE, HEALTH DEPARTMENTS	C			
KITCHEN EQUIPMENT	3RD	3RD	GC	
STAINLESS STEEL	3RD	3RD	3RD	
EXTERIOR SIGN	SC	SC	SC	1
MONUMENT SIGN	SC	SC	SC	1,2
MENU BOARD SIGN	SC	SC	SC	6,7
POINT OF SALE EQUIPMENT	3RD	3RD	3RD	3
WATER FILTRATION	3RD	GC	GC	8
INTERNET / COMMUNICATION	3RD	3RD	3RD	4,5
RESTROOM SOAP & PAPER TOWEL DISPENSER	F	GC	GC	4

NOTES:

1. POWER PROVIDED BY GC
2. FOUNDATION PROVIDED BY GC
3. EMPTY CONDUIT AND BOXES PROVIDED BY GC
4. CONTRACT WITH SERVICE PROVIDERS BY CORPORATE
5. CONDUIT UG SERVICE / TMB / EMPTY CONDUIT AND BOXES BY GC
6. GC TO MAKE FINAL ELECTRICAL CONNECTION
7. DATA/SPEAKER CONNECTIONS BY SC
8. GC TO INSTALL REVERSE OSMOSIS WATER FILTRATION SYSTEM. SEE MANUFACTURER INSTALLATION INSTRUCTIONS IN BID PACKAGE

LEGEND:

GC = GENERAL CONTRACTOR
F = FRANCHISEE/ OWNER/ OPERATOR
GHA = GHA ARCHITECTS
C = CORPORATE
SC = SIGN COMPANY
3RD = 3RD PARTY

RESPONSIBILITY SCHEDULE - FRANCHISE LOCATION

	SUPPLIED BY	INSTALLED BY	FINAL CONNECT	REMARKS
BUILDING PERMIT	GHA			6
SIGNAGE PERMIT (EXTERIOR) & SIGN INSTALL	SC	SC	GC	7
PERMIT FEES- CITY BUILDING/DEVELOPMENT/SAFETY, STATE, HEALTH DEPARTMENTS	GHA			
KITCHEN EQUIPMENT	3RD	3RD	GC	
STAINLESS STEEL	3RD	3RD	GC	
EXTERIOR SIGNS	SC	SC	SC	1
MONUMENT SIGN (IF SHOWN ON PLAN)	SC	SC	SC	1,2 IF SHOWN PER PLAN
MENU BOARD SIGN	SC	SC	SC	7,8
POINT OF SALE EQUIPMENT	3RD	3RD	3RD	3
WATER FILTRATION	3RD	GC	GC	9
INTERNET / COMMUNICATION	3RD	3RD	3RD	4,5
RESTROOM SOAP & PAPER TOWEL DISPENSER	3RD	GC	GC	4

NOTES:

1. POWER PROVIDED BY GC
2. FOUNDATION PROVIDED BY GC
3. EMPTY CONDUIT AND BOXES PROVIDED BY GC
4. CONTRACT WITH SERVICE PROVIDERS BY FRANCHISE
5. CONDUIT UG SERVICE / TMB / EMPTY CONDUIT AND BOXES BY GC
6. FINAL PERMIT FEES BY GC
7. GC TO MAKE FINAL ELECTRICAL CONNECTION
8. DATA/SPEAKER CONNECTIONS BY SC
9. GC TO INSTALL REVERSE OSMOSIS WATER FILTRATION SYSTEM. SEE MANUFACTURER INSTALLATION INSTRUCTIONS IN BID PACKAGE

LEGEND:

GC = GENERAL CONTRACTOR
F = FRANCHISEE/ OWNER/ OPERATOR
GHA = GHA ARCHITECTS
C = CORPORATE
SC = SIGN COMPANY
3RD = 3RD PARTY

GHA
Architecture / Development
14901 Quorum Drive
Suite 300
Dallas Texas 75254
Ph: (972) 239-8884
Fax: (972) 239-5054

STATE OF MICHIGAN
KEVIN HENDERSON
ARCHITECT
No. 4301054109
LICENSED ARCHITECT
12/21/2021

EST. 1998 SCOOTER'S COFFEE

PROJECT ADDRESS:
1490 WEST ANN ARBOR ROAD
PLYMOUTH, MI 48170

REVISIONS:

TITLE:
RESPONSIBILITY SCHEDULE AND BUILDING COMCHECK

DATE:
12/21/2021

PROJECT NO.
210536

- [ ] DESIGN DEVELOPMENT
- [x] PERMIT SUBMITTAL
- [x] BID PACKAGE
- [ ] CONSTRUCTION ISSUE

SHEET NO.
G0.4

THIS DRAWING AND ITS CONTENTS ARE THE COPYRIGHTED PROPERTY OF GHA ARCHITECTS. USE THEREOF IS LIMITED TO THE SPECIFIC PROJECT AND SITE SET FORTH ABOVE, AND MAY NOT BE OTHERWISE USED OR REPRODUCED, IN WHOLE OR IN PART, WITHOUT THE WRITTEN PERMISSION OF GHA ARCHITECTS, THE ARCHITECT. THIS DRAWING IS TO BE RETURNED UPON REQUEST.

COM*check* Software Version COMcheckWeb

Inspection Checklist

Energy Code: 2015 IECC

Requirements: 0.0% were addressed directly in the COM*check* software

Text in the "Comments/Assumptions" column is provided by the user in the COMcheck Requirements screen. For each requirement, the user certifies that a code requirement will be met and how that is documented, or that an exception is being claimed. Where compliance is itemized in a separate table, a reference to that table is provided.

Section # & Req.ID	Plan Review	Complies?	Comments/Assumptions
C103.2 [PR1][1]	Plans and/or specifications provide all information with which compliance can be determined for the building envelope and document where exceptions to the standard are claimed.	☐Complies ☐Does Not ☐Not Observable ☐Not Applicable	
C402.4.1 [PR10][1]	The vertical fenestration area <= 30 percent of the gross above-grade wall area.	☐Complies ☐Does Not ☐Not Observable ☐Not Applicable	
C402.4.1 [PR11][1]	The skylight area <= 3 percent of the gross roof area.	☐Complies ☐Does Not ☐Not Observable ☐Not Applicable	
C402.4.2 [PR14][1]	In enclosed spaces > 2,500 ft2 directly under a roof with ceiling heights >15 ft. and used as an office, lobby, atrium, concourse, corridor, storage, gymnasium/exercise center, convention center, automotive service, manufacturing, non-refrigerated warehouse, retail store, distribution/sorting area, transportation, or workshop, the following requirements apply: (a) the daylight zone under skylights is >= half the floor area; (b) the skylight area to daylight zone is >= 3 percent with a skylight VT >= 0.40; or a minimum skylight effective aperture >= 1 percent.	☐Complies ☐Does Not ☐Not Observable ☐Not Applicable	

Additional Comments/Assumptions:

1 High Impact (Tier 1) | 2 Medium Impact (Tier 2) | 3 Low Impact (Tier 3)

Project Title: Scooter's - Plymouth, MI - Proto - 4.0 Report date: 12/15/21
Data filename: Page 3 of 8

Section # & Req.ID	Footing / Foundation Inspection	Complies?	Comments/Assumptions
C303.2 [FO4][2]	Slab edge insulation installed per manufacturer's instructions.	☐Complies ☐Does Not ☐Not Observable ☐Not Applicable	
C303.2.1 [FO6][1]	Exterior insulation protected against damage, sunlight, moisture, wind, landscaping and equipment maintenance activities.	☐Complies ☐Does Not ☐Not Observable ☐Not Applicable	
C104 [FO3][2]	Installed slab-on-grade insulation type and R-value consistent with insulation specifications reported in plans and COMcheck reports.	☐Complies ☐Does Not ☐Not Observable ☐Not Applicable	*See the Envelope Assemblies table for values.*

Additional Comments/Assumptions:

1 High Impact (Tier 1) | 2 Medium Impact (Tier 2) | 3 Low Impact (Tier 3)

Project Title: Scooter's - Plymouth, MI - Proto - 4.0 Report date: 12/15/21
Data filename: Page 4 of 8

Section # & Req.ID	Framing / Rough-In Inspection	Complies?	Comments/Assumptions
C303.1.3 [FR12][2]	Fenestration products rated in accordance with NFRC.	☐Complies ☐Does Not ☐Not Observable ☐Not Applicable	
C303.1.3 [FR13][1]	Fenestration products are certified as to performance labels or certificates provided.	☐Complies ☐Does Not ☐Not Observable ☐Not Applicable	
C402.4.3 [FR10][1]	Vertical fenestration SHGC value.	☐Complies ☐Does Not ☐Not Observable ☐Not Applicable	*See the Envelope Assemblies table for values.*
C402.4.3, C402.4.3.4 [FR8][1]	Vertical fenestration U-Factor.	☐Complies ☐Does Not ☐Not Observable ☐Not Applicable	*See the Envelope Assemblies table for values.*
C402.4.4 [FR14][2]	U-factor of opaque doors associated with the building thermal envelope meets requirements.	☐Complies ☐Does Not ☐Not Observable ☐Not Applicable	*See the Envelope Assemblies table for values.*
C402.5.1.2.1 [FR19][1]	The building envelope contains a continuous air barrier that is sealed in an approved manner and material permeability <= 0.004 dfm/ft2. Air barrier penetrations are sealed in an approved manner.	☐Complies ☐Does Not ☐Not Observable ☐Not Applicable	
C402.5.2, C402.5.4 [FR18][1]	Factory-built fenestration and doors are labeled as meeting air leakage requirements.	☐Complies ☐Does Not ☐Not Observable ☐Not Applicable	
C402.5.7 [FR17][3]	Vestibules are installed on all building entrances. Doors have self-closing devices.	☐Complies ☐Does Not ☐Not Observable ☐Not Applicable	

Additional Comments/Assumptions:

1 High Impact (Tier 1) | 2 Medium Impact (Tier 2) | 3 Low Impact (Tier 3)

Project Title: Scooter's - Plymouth, MI - Proto - 4.0 Report date: 12/15/21
Data filename: Page 5 of 8

Section # & Req.ID	Mechanical Rough-In Inspection	Complies?	Comments/Assumptions
C402.5.5, C403.2.4.3 [ME3][3]	Stair and elevator shaft vents have motorized dampers that automatically close.	☐Complies ☐Does Not ☐Not Observable ☐Not Applicable	
C402.5.5, C403.2.4.3 [ME58][3]	Outdoor air and exhaust systems have motorized dampers that automatically shut when not in use and meet maximum leakage rates. Check gravity dampers where allowed.	☐Complies ☐Does Not ☐Not Observable ☐Not Applicable	

Additional Comments/Assumptions:

1 High Impact (Tier 1) | 2 Medium Impact (Tier 2) | 3 Low Impact (Tier 3)

Project Title: Scooter's - Plymouth, MI - Proto - 4.0 Report date: 12/15/21
Data filename: Page 6 of 8

Section # & Req.ID	Insulation Inspection	Complies?	Comments/Assumptions
C303.1 [IN3][1]	Roof insulation installed per manufacturer's instructions. Blown or poured loose-fill insulation is installed only where the roof slope is <=3 in 12.	☐Complies ☐Does Not ☐Not Observable ☐Not Applicable	
C303.1 [IN10][2]	Building envelope insulation is labeled with R-value or insulation certificate providing R-value and other relevant data.	☐Complies ☐Does Not ☐Not Observable ☐Not Applicable	
C303.2 [IN7][1]	Above-grade wall insulation installed per manufacturer's instructions.	☐Complies ☐Does Not ☐Not Observable ☐Not Applicable	
C303.2.1 [IN14][2]	Exterior insulation is protected from damage with a protective material. Verification for exposed foundation insulation may need to occur during Foundation Inspection.	☐Complies ☐Does Not ☐Not Observable ☐Not Applicable	
C402.2.1 [IN17][3]	Insulation intended to meet the roof insulation requirements cannot be installed on top of a suspended ceiling. Mark this requirement compliant if insulation is installed accordingly.	☐Complies ☐Does Not ☐Not Observable ☐Not Applicable	
C104 [IN6][1]	Installed above-grade wall insulation type and R-value consistent with insulation specifications reported in plans and COMcheck reports.	☐Complies ☐Does Not ☐Not Observable ☐Not Applicable	*See the Envelope Assemblies table for values.*
C104 [IN8][2]	Installed floor insulation type and R-value consistent with insulation specifications reported in plans and COMcheck reports.	☐Complies ☐Does Not ☐Not Observable ☐Not Applicable	*See the Envelope Assemblies table for values.*
C402.2.6 [IN18][3]	Radiant panels and associated components, designed for heat transfer from the panel surfaces to the occupants or indoor space are insulated with a minimum of R-3.5.	☐Complies ☐Does Not ☐Not Observable ☐Not Applicable	
C104 [IN2][1]	Installed roof insulation type and R-value consistent with insulation specifications reported in plans and COMcheck reports. For some ceiling systems, verification may need to occur during Framing Inspection.	☐Complies ☐Does Not ☐Not Observable ☐Not Applicable	*See the Envelope Assemblies table for values.*
C402.5.1.1 [IN1][1]	All sources of air leakage in the building thermal envelope are sealed, caulked, gasketed, weather stripped or wrapped with moisture vapor-permeable wrapping material to minimize air leakage.	☐Complies ☐Does Not ☐Not Observable ☐Not Applicable	

Additional Comments/Assumptions:

1 High Impact (Tier 1) | 2 Medium Impact (Tier 2) | 3 Low Impact (Tier 3)

Project Title: Scooter's - Plymouth, MI - Proto - 4.0 Report date: 12/15/21
Data filename: Page 7 of 8

Section # & Req.ID	Final Inspection	Complies?	Comments/Assumptions
C402.5.3 [FI51][3]	Where open combustion air ducts provide combustion air to open combustion fuel burning appliances, the appliances and combustion air opening are located outside the building thermal envelope or enclosed in a room, isolated from inside the thermal envelope. Such rooms are sealed and insulated.	☐Complies ☐Does Not ☐Not Observable ☐Not Applicable	
C402.5.6 [FI37][1]	Weatherseals installed on all loading dock cargo doors.	☐Complies ☐Does Not ☐Not Observable ☐Not Applicable	
C402.5.8 [FI26][3]	Recessed luminaires in thermal envelope to limit infiltration and be IC rated and labeled. Seal between interior finish and luminaire housing.	☐Complies ☐Does Not ☐Not Observable ☐Not Applicable	

Additional Comments/Assumptions:

1 High Impact (Tier 1) | 2 Medium Impact (Tier 2) | 3 Low Impact (Tier 3)

Project Title: Scooter's - Plymouth, MI - Proto - 4.0 Report date: 12/15/21
Data filename: Page 8 of 8

GHA
Architecture / Development
14901 Quorum Drive
Suite 300
Dallas Texas 75254
Ph: (972) 239-8884
Fax: (972) 239-5054

STATE OF MICHIGAN
KEVIN J. HENDERSON
ARCHITECT
No. 4001056109
LICENSED ARCHITECT
12/21/2021

EST. 1998 SCOOTER'S COFFEE

PROJECT ADDRESS:
1490 WEST ANN ARBOR ROAD
PLYMOUTH, MI 48170

REVISIONS:

TITLE:
BUILDING COMCHECK

DATE:
12/21/2021

PROJECT NO.
210536

☐ DESIGN DEVELOPMENT
☒ PERMIT SUBMITTAL
☒ BID PACKAGE
☐ CONSTRUCTION ISSUE

SHEET NO.
G0.5

ARCHITECTURAL SPECIFICATIONS

0101 SUMMARY OF WORK

A. DESCRIPTION
1.1. GENERAL CONTRACTOR SHALL BE RESPONSIBLE FOR ALL CONSTRUCTION INDICATED ON THESE CONSTRUCTION DOCUMENTS, WITH FINAL APPROVALS OF ALL WORK.
1.2. THE CONTRACTOR RESPONSIBLE FOR THE PORTION OF THE WORK REQUIRING INSPECTIONS BY GOVERNMENT AGENCIES, IS CHARGED WITH REQUESTING ALL SUCH INSPECTIONS.
1.3. CLOSE COORDINATION WILL BE REQUIRED BETWEEN GENERAL, MECHANICAL AND ELECTRICAL CONTRACTORS. IT SHALL BE THE RESPONSIBILITY OF THE GENERAL CONTRACTOR TO COORDINATE SCHEDULING AND PHASING OF CONSTRUCTION.
1.4. CLOSE COORDINATION OF FINAL EQUIPMENT CONNECTION REQUIREMENTS AND CONDITIONS WILL BE NECESSARY ON THIS PROJECT. ENGINEERING OF GAS, ELECTRIC, WATER AND SEWER AND VENTILATION SERVICES MAY VARY WITH FINAL SELECTIONS.

0108 APPLICABLE STANDARDS

A. DESCRIPTION
1.1. WORK INCLUDED: THROUGHOUT THE CONTRACT DOCUMENTS, REFERENCE IS MADE TO CODES AND STANDARDS WHICH ESTABLISH QUALITIES AND TYPES OF WORKMANSHIP AND MATERIALS, AND WHICH ESTABLISH METHODS FOR TESTING AND REPORTING ON THE PERTINENT CHARACTERISTICS.
1.2. RELATED WORK DESCRIBED ELSEWHERE: SPECIFIC NAMING OF CODES OR STANDARDS OCCURS ON THE DRAWINGS AND IN OTHER SECTIONS OF THESE SPECIFICATIONS.
B. QUALITY ASSURANCE:
1.1. FAMILIARITY WITH PERTINENT CODES AND STANDARDS: IN PROCURING ALL ITEMS USED IN THIS WORK IT IS CONTRACTOR'S RESPONSIBILITY TO VERIFY THE DETAILED REQUIREMENTS OF THE PREVAILING CODES AND STANDARDS AND TO VERIFY THAT THE ITEMS PROCURED FOR USE IN THE WORK MEET OR EXCEED THE SPECIFIED REQUIREMENTS.
1.2. REJECTION OF NON-COMPLYING ITEMS: THE TENANT RESERVES THE RIGHT TO REJECT ITEMS INCORPORATED INTO THE WORK, WHICH FAIL TO MEET THE SPECIFIED MINIMUM REQUIREMENTS. THE TENANT FURTHER RESERVES THE RIGHT, AND WITHOUT PREJUDICE TO OTHER RECOURSE THE TENANT MAY TAKE, TO ACCEPT NON-COMPLYING ITEMS SUBJECT TO AN ADJUSTMENT IN THE CONTRACT AMOUNT AS APPROVED BY THE OWNER.

1.3 APPLICABLE STANDARDS LISTED IN THESE SPECIFICATION INCLUDE, BUT ARE NOT NECESSARILY LIMITED TO, STANDARDS PROMULGATED BY THE FOLLOWING AGENCIES AND ORGANIZATION:
AMERICAN INSTITUTE OF STEEL CONSTRUCTION (AISC)
AMERICAN INSTITUTE OF TIMBER CONSTRUCTION (AITC)
AMERICAN NATIONAL STANDARDS INSTITUTE (ANSI)
AMERICAN PLYWOOD ASSOCIATION (APA)
AMERICAN SOCIETY OF TESTING AND MATERIALS (ASTM)
AMERICAN WELDING SOCIETY (AWS)
ARCHITECTURAL ALUMINUM MANUFACTURERS ASSOCIATION (AAMA)
ARCHITECTURAL WOODWORK INSTITUTE (AWI)
INTERNATIONAL BUILDING CODE (IBC)
COMMERCIAL SPECIFICATIONS (CS)
CONCRETE REINFORCING STANDARDS
NATIONAL ACOUSTICAL CONTRACTORS ASSOCIATION
NATIONAL ASSOCIATION OF ARCHITECTURAL METAL MANUFACTURERS (NAAMA)
NATIONAL BUILDERS HARDWARE ASSOCIATION (NBHA)
NATIONAL CONCRETE MASONRY ASSOCIATION (NFPA)
NATIONAL ELECTRICAL MANUFACTURERS ASSOCIATION (NEMA)
NATIONAL SANITATION FOUNDATION (NSF)
NATIONAL WOODWORK MANUFACTURERS ASSOCIATION (NWMA)
TILE COUNCIL OF AMERICA (TCA)
UNDERWRITER LABORATORIES (UL)

0171 CLEANING

A. DESCRIPTION:
1.1. SCOPE OF WORK: THROUGHOUT THE CONSTRUCTION PERIOD, MAINTAIN THE BUILDING AND SITE IN A STANDARD OF CLEANLINESS AS DESCRIBED IN THIS SECTION.
1.2. RELATED WORK: IN ADDITION TO STANDARDS DESCRIBED IN THIS SECTION, COMPLY WITH ALL REQUIREMENTS FOR CLEANING UP AS DESCRIBED IN VARIOUS OTHER SECTIONS OF THESE SPECIFICATIONS.

1.3 FINAL CLEANING:
a. DEFINITION: EXCEPT AS OTHERWISE SPECIFICALLY PROVIDED, "CLEAN" (FOR THE PURPOSE OF THIS ARTICLE) SHALL BE INTERPRETED AS MEANING THE LEVEL OF CLEANLINESS GENERALLY PROVIDED BY SKILLED CLEANERS USING COMMERCIAL QUALITY BUILDING MAINTENANCE EQUIPMENT AND MATERIALS.
b. GENERAL: PRIOR TO COMPLETION OF THE WORK, REMOVE FROM THE JOB SITE ALL TOOLS, SURPLUS MATERIALS, EQUIPMENT, SCRAP, DEBRIS, AND WASTE.
c. INTERIOR: VISUALLY INSPECT ALL INTERIOR SURFACES AND REMOVE ALL TRACES OF SOIL, WASTE MATERIAL, SMUDGES, AND OTHER FOREIGN MATTER. REMOVE ALL TRACES OF SPLASHED MATERIALS FROM ADJACENT SURFACES. REMOVE ALL PAINT DROPPINGS, SPOTS, STAINS, AND DIRT FROM FINISHED SURFACES. USE ONLY THE SPECIFIED CLEANING MATERIALS AND EQUIPMENT.

0550 -METAL FABRICTIONS

1. WORK INCLUDES MISCELLANEOUS SHOP FABRICATED FERROUS METAL ITEMS, INCLUDING BUT NOT LIMITED TO:

A. LOOSE STEEL LINTELS
B. MISCELLANEOUS FRAMING, SUPPORTS AND TRIM
C. ROOF LADDERS
D. STEEL DECK PANELS

2. MATERIALS

A. STEEL SECTIONS: ASTM A36.
B. STEEL TUBING: ASTM A500 OR ASTM A501.
C. STAINLESS STEEL: TYPE 304 (18-8), ASTM A269; SATIN POLISHED FINISH.
D. STEEL PIPE: ASTM A53, GRADE B, STANDARD WEIGHT (SCHEDULE 40).
E. MALLEABLE IRON CASTINGS; ASTM A47.
F. BOLTS, NUTS, AND WASHERS. ASTM A307.
G. WELDING MATERIALS: ASW D1.1; TYPE REQUIRED FOR MATERIALS BEING WELDED.
H. PRIMER SSPC-PAINT 2, FOR SHOP APPLICATION AND FIELD TOUCH-UP.
I. STEEL DECK PANELS: ASTM A446 WITH G90 GALVANIZED COATING, STEEL ASTM A611, GRADE C, SHOP PRIMED.

3. FABRICATION:

A. VERIFY DIMENSIONS IN FIELD PRIOR TO SHOP FABRICATION.
B. FABRICATE ITEMS WITH JOINTS TIGHTLY FITTED AND SECURED.
C. FIT AND SHOP ASSEMBLE IN LARGEST PRACTICAL SECTIONS, FOR DELIVERY TO SITE.
D. PRIME PAINT ITEMS SCHEDULE TO PROVIDE A UNIFORM DRY FILM THICKNESS OF 2.0 MILS.

4. LADDERS:

A. FABRICATE LADDERS FOR THE LOCATIONS SHOWN, WITH DIMENSIONS; SPACING, DETAILS AND ANCHORAGE AS INDICATED. COMPLY WITH THE REQUIREMENTS OF ANSI A 14.3, EXCEPT AS OTHERWISE INDICATED.
1) UNLESS OTHERWISE SHOWN, PROVIDE 1/2' X 2-1/2" CONTINUOUS STRUCTURAL STEEL FLAT BAR SIDE RAILS WITH EASED EDGES, SPACED 24" APART.
2) PROVIDE 3/4" DIAMETER SOLID STRUCTURAL STEEL BAR RANGE, SPACED 12"O.C.

B. FIT RUNGS IN CENTERLINE OF SIDE RAILS, PLUG WELD AND GRIND SMOOTH ON OUTER RAIL FACES.

C. SUPPORT EACH LADDER AT TOP AND BOTTOM AND AT INTERMEDIATE POINTS, SPACED NOT MORE THAN 5'-0" O.C. USE WELDED OR BOLTED STEEL BRACKETS, DESIGNED FOR ADEQUATE SUPPORT AND ANCHORAGE, AND TO HOLD LADDER CLEAR OF THE WALL SURFACE WITH A MINIMUM OF 7" CLEARANCE WALL TO CENTERLINE OF RUNGS. RETURN RAILS TO WALL OR STRUCTURE UNLESS OTHER SECURE HANDHOLDS ARE PROVIDED.

D. PROVIDE NON-SLIP SURFACE ON TOP OF EACH RUNG, EITHER BY COATING THE RUNG WITH ALUMINUM OXIDE GRANULES SET IN EPOXY RESIN ADHESIVE, OR BY USING A TYPE OF MANUFACTURED RUNG WHICH IS FILLED WITH ALUMINUM OXIDE GROUT.

0720 - THERMAL INSULATION

A. GENERAL: PROVIDE THERMAL INSULATION WITH ACCESSORIES AS REQUIRED FOR COMPLETE INSTALLATION.
1. INSULATION INTEGRAL WITH ROOFING AND INSULATION IN EXTERIOR WALLS.
B. ACCESSORIES: PROVIDE TAPE OR PENETRATION ANCHORS WHERE REQUIRED TO ENSURE PERMANENT INSTALLATION.

A. MATERIALS:

1.1 ROOF INSULATION POLYISOCYANURATE INSULATION BOARD FIRESTONE STANDARD ISO 95+GL (OR EQUAL) COVER BOARD FIRESTONE ASTM C1289 TYPE II, CLASS 4 ISOGARD HD COMPOSITE COVER BOARD (OR EQUAL)
1.2 THERMAL BATT INSULATION: PREFORMED GLASS FIBER BATT WITH FSK-25 REFLECTIVE MEMBRANE ON ONE SIDE ASTM C665 TYPE III, CLASS A KNAUF INSULATION ECOBATT INSULATION (OR EQUAL).
1.3 TAPE: TO MATCH FOIL SCRIM KRAFT FACE; 2 INCH WIDTH.
1.4 EXTRUDED POLYSTYRENE (XPS) RIGID FOAM INSULATION UNDER GRADE. ASTM C578 TYPE IV OWENS CORNING FOAMULAR 250 (OR EQUAL).
1.5 ACOUSTICAL BATT INSULATION PERFORMED FIBER BATT UNFACED ASTM C665 TYPE I, CLASS A KNAUF INSULATION ECOBATT INSULATION (OR EQUAL).

B. INSTALLATION:

1. INSTALL INSULATION IN ACCORDANCE WITH MANUFACTURER'S RECOMMENDATIONS AND AS INDICATED.
2. TRIM INSULATION NEATLY TO FIT SPACES. INSTALL WITHOUT GAPS OR VOIDS.

3. INSTALLATION OF THERMAL BATT INSULATION:

3.1. INSTALL INSULATION WITH VAPOR BARRIER TOWARD WARM SIDE OF BUILDING SPACES. VAPOR BARRIER SHALL BE CONTINUOUS. TAPE SEAL TEARS OR CUTS IN VAPOR BARRIER

3.2. PACK BATT INSULATION IN SHIM SPACES AT PERIMETER OF WINDOW ASSEMBLY TO MAINTAIN CONTINUITY OF THERMAL BARRIER.

3.3. MECHANICAL FASTENING:

3.3.1. AT LOCATIONS WHERE NO FRAMING IS PRESENT TO SUPPORT THE INSULATION, PROVIDE METAL IMPALING PINS AND RETAINERS TO HOLD THE INSULATION FIRMLY IN PLACE.

3.3.2. MECHANICALLY OR ADHESIVELY BOND THE RETAINING PINS TO THE SUBSTRATE IN ACCORDANCE WITH THE MANUFACTURER'S RECOMMENDATIONS.

3.3.3. SPACE PINS AT MAXIMUM 24 INCHES ON CENTER ALONG THE EDGES AND WITHIN THE FIELD OF THE BLANKET. PLACE EDGE PINS WITHIN 6 INCHES FROM THE EDGE OF THE BATT.

4. INSTALLATION OF RIGID PERIMETER INSULATION: INSTALL INSULATION FROM TOP OF FOOTING TO UNDERSIDE OF SLAB AND BENEATH THE SLAB HORIZONTALLY 24" FROM THE INTERIOR FACE OF THE FOOTING.

C. R VALUE SCHEDULE:

1.1 PROVIDE INSULATION IN SUFFICIENT THICKNESS; REFERENCE BUILDING COMCHECK ON G0.4

7457 CEMENTITIOUS PANELS

PART 1 GENERAL

1.1. SECTION INCLUDES
A. CEMENTITIOUS EXPRESS/REVEAL JOINTED PANELS WITH ACCESSORIES. (JAMES HARDIE HZ10 HARDIE REVEAL PANELS).

PART 2 PRODUCTS

2.1 MANUFACTURERS
A. ACCEPTABLE MANUFACTURER:
JAMES HARDIE BUILDING PRODUCTS, INC., WHICH IS LOCATED AT: 231 SOUTH LASALLE STREET UNIT 2000, CHICAGO, IL 60606. ASD. TOLL FREE TEL: 866-274-3464; TEL: 312-705-6000; EMAIL: INFO@JAMESHARDIE.COM; WEB: HTTP://WWW.JAMESHARDIEPROS.COM/PRODUCTS /HARDIE-REVEAL-PANEL-SYSTEM
2.2 CLADDING
A. CEMENT CLADDING PANELS: HARDIE REVEAL PANEL AS MANUFACTURED BT JAMES HARDIE BUILDING PRODUCTS, INC. 5/16 INCHES THICK, 3 FEET 11.5 INCHES (1206 MM) WIDE BY 7 FEET 11.5 INCHES (2426) MM LONG. PRODUCT SHALL BE ENGINEERED FOR CLIMATE CONDITIONS.
1. MANUFACTURER'S CLIMATE ZONE PRODUCT: HZ10 FOR HOT HUMID AND WET CLIMATES WITH A YELLOW TINT PRIMER - SMOOTH FINISH.
B. CODE COMPLIANCE REQUIREMENT FOR SIDING MATERIALS:
1. FIBER-CEMENT SIDING, COMPLIES WITH ASTM C 1186 TYPE A GRADE II.
2. FIBER-CEMENT SIDING, COMPLIES WITH ASTM E 136 AS A NONCOMBUSTIBLE MATERIAL.
3. FIBER-CEMENT SIDING, COMPLIES WITH ASTM E 84 FLAME SPREAD INDEX = 0, SMOKE DEVELOPED INDEX=5.
4. FIBER-CEMENT SIDING, COMPLIES WITH ASTM E 119 1 HOUR AND 2 HOUR FIRE RESISTIVE ASSEMBLIES LISTED WITH WARNOCK HERSEY.
5. FIBER-CEMENT SIDING, TESTED TO ASTM E330 FOR TRANSVERSE LOADS.
6. INTERTEK WARNOCK HERSEY PRODUCT LISTING.
7. MANUFACTURER'S TECHNICAL DATA SHEET.
2.3 WEATHER BARRIER
A. WEATHER BARRIER: JAMES HARDIE HARDIEWRAP AND HARDIEWRAP FLASHING AND SEAM TAPES (OR EQUAL).
B. CODE COMPLIANCE REQUIREMENT FOR WEATHER BARRIER:
1. THICKNESS, 11 MIL SHEET.
2. BREATHABILITY IN ACCORDANCE WITH ASTM E96.
3. TEAR STRENGTH IN ACCORDANCE WITH ASTM D1117.
4. WATER RESISTANCE IN ACCORDANCE WITH AATCC127.
5. AIR PENETRATION IN ACCORDANCE WITH TAPPI-T460.
6. HARDIEWRAP WEATHER BARRIER ICC-ES EVALUATION REPORT ESR-2258.
2.4 ACCESSORIES
A. TRIMS: REVEAL TRIMS MANUFACTURED BY CUSTOM ALUMINUM OF ELGIN, IL IN THE FOLLOWING PROFILES SUPPLIED BY JAMES HARDIE. ALUMINUM ALLOY 6063-T5 WITH A MINIMUM THICKNESS OF 0.050 INCH. ALL REVEAL TRIMS ARE 8 FEET IN LENGTH.
1. SURROUND HORIZONTAL TRIM.
2. SURROUND VERTICAL TRIM.
3. SURROUND HORIZONTAL END CUT TRANSITION TRIM.
4. SURROUND OUTSIDE CORNER TRIM.
5. SURROUND INSIDE CORNER TRIM.
6. SURROUND J CHANNEL TRIM.
7. SURROUND DRAINAGE FLASHING
8. RECESS HORIZONTAL TRIM.
9. RECESS VERTICAL TRIM.
10. RECESS HORIZONTAL EDGE TRIM.
11. RECESS VERTICAL F-TRIM.
12. RECESS OUTSIDE CORNER TRIM.
13. RECESS DRAINAGE FLASHING.
2.5 FASTENERS
A. FASTENERS: FOR ATTACHING HARDIE REVEAL PANEL DIRECT TO SHEATHING TO A RAIN SCREEN PROVIDE THE FOLLOWING:
1. WOOD FRAMING, COUNTERSUNK SCREWS: NO. 8 BY 0.39 INCH HEAD DIAMETER BY 1-5/8 INCH LONG.
2. FASTENERS SHALL BE OF HIGH QUALITY STAINLESS STEEL TO ENSURE RESISTANCE TO CORROSION. FOR FIELD PAINTING, FASTENERS SHALL BE TREATED TO ACCEPT PAINT ADHESION.

PART 3 EXECUTION

3.1 EXAMINATION
A. DO NOT BEGIN INSTALLATION UNTIL SUBSTRATES HAVE BEEN PROPERLY PREPARED.
B. IF FRAMING PREPARATION IS THE RESPONSIBILITY OF ANOTHER INSTALLER, NOTIFY ARCHITECT OF UNSATISFACTORY PREPARATION BEFORE PROCEEDING.
3.2 PREPARATION
A. CLEAN SURFACES THOROUGHLY PRIOR TO INSTALLATION.
B. PREPARE SURFACES USING THE METHODS RECOMMENDED BY THE MANUFACTURER FOR ACHIEVING THE BEST RESULT FOR THE SUBSTRATE UNDER THE PROJECT CONDITIONS.
C. ENSURE THAT DRAINAGE PLANE IN INTACT AND ALL PENETRATIONS ARE SEALED.
3.3 INSTALLATION
A. WOOD FRAMING: NOMINAL 2 INCH BY 4 INCH (51 MM BY 102 MM) WOOD FRAMING SELECTED FOR MINIMAL SHRINKAGE AND COMPLYING WITH LOCAL BUILDING CODES, INCLUDING THE USE OF WATER-RESISTIVE BARRIERS OR VAPOR BARRIERS WHERE REQUIRED. MINIMUM 1-1/2 INCHES (38 MM) FACE AND STRAIGHT, TRUE, OF UNIFORM DIMENSIONS AND PROPERLY ALIGNED.
1. INSTALL WATER-RESISTIVE BARRIERS AND CLADDINGS TO DRY SURFACES.
2. REPAIR AND PUNCTURES OR TEARS IN THE WATER-RESISTIVE BARRIER PRIOR TO THE INSTALLATION OF THE SIDING.
3. PROTECT SIDING FROM OTHER TRADES.

07462 SIDING

PART 1 GENERAL

1.1. SECTION INCLUDES
A. FIBER CEMENT LAP SIDING, PANELS, SHINGLE, TRIM, FASCIA, MOULDING AND ACCESSORIES: JAMES HARDIE HZ10 ENGINEERED FOR CLIMATE SIDING.
1.2 WARRANTY
A. PRODUCT WARRANTY: LIMITED, NON-PRO-RATED PRODUCT WARRANTY.
1. HARDIEPLANK HZ10 LAP SIDING FOR 30 YEARS.
B. WORKMANSHIP WARRANTY: APPLICATION LIMITED WARRANTY FOR 2 YEARS.

PART 2 PRODUCTS

2.1 MANUFACTURERS
A. ACCEPTABLE MANUFACTURER: JAMES HARDIE BUILDING PRODUCTS, INC., WHICH IS LOCATED AT: 26300 LA ALAMEDA SUITE 400 ; MISSION VIEJO, CA 92691; TOLL FREE TEL: 866-274-3464; TEL: 949-367-4980; FAX: 949-367-4981; EMAIL: REQUEST INFO (INFO@JAMESHARDIE.COM); WEB: WWW.JAMESHARDIECOMMERCIAL.COM
SIDING
2.2
A. HARDIEPLANK HZ10 LAP SIDING:
1. FIBER-CEMENT SIDING - COMPLIES WITH STM C 1186 TYPE A GRADE II.
2. FIBER-CEMENT SIDING - COMPLIES WITH STM E 136 AS A NONCOMBUSTIBLE MATERIAL.
3. FIBER-CEMENT SIDING - COMPLIES WITH ASTM E 84 FLAME SPREAD INDEX = 0, SMOKE DEVELOPED INDEX = 5.
4. CAL-FIRE, FIRE ENGINEERING DIVISION BUILDING MATERIALS LISTING - WILDLAND URBAN INTERFACE (WUI) LISTED PRODUCT.
5. NATIONAL EVALUATION REPORT NO. NER 405 (BOCA, ICBO, SBCCI, IBC, IRC).
6. CITY OF LOS ANGELES, RESEARCH REPORT NO. 24862.
7. MIAMI DADE COUNTY, FLORIDA NOTICE OF ACCEPTANCE 07-0418-04.
8. US DEPARTMENT OF HOUSING AND URBAN DEVELOPMENT MATERIALS RELEASE 1263D.
9. CALIFORNIE DSA PA-019.
10. CITY OF NEW YORK M EA 223-93-M.
11. FLORIDA STATE PRODUCT APPROVAL FL889.
12. TEXAS DEPARTMENT OF INSURANCE PRODUCT EVALUATION EC-23.
B. LAP SIDING: HARDIEPLANKHZ10 LAP AS MANUFACTURED BY JAMES HARDIE BUILDING PRODUCTS, INC.
1. TYPE: SELECT CEDARMILL 6-1/4 INCHES (159 MM) WITH 5 INCHES (127 MM) EXPOSURE.
C. TRIM:
1. HARDIETRIM HZ10 BOARDS AS MANUFACTURED BY JAMES HARDIE BUILDING PRODUCTS, INC.
2. HARDIETRIM HZ10 FASCIA BOARDS AS MANUFACTURED BY JAMES HARDIE BUILDING PRODUCTS, INC.

2.3 FASTENERS
A. WOOD FRAMING FASTENERS:
1. WOOD FRAMING: 4D COMMON CORROSION RESISTANT NAILS.
2. WOOD FRAMING: 6D COMMON CORROSION RESISTANT NAILS.
3. WOOD FRAMING: 8D BOX RING COMMON CORRSION RESISTANT NAILS.
4. WOOD FRAMING: 0.089 INCH (2.2 MM) SHANK BY 0.221 INCH (5.6 MM) HEAD BY 2 INCHES (51 MM) CORROSION RESISTANT SIDING NAILS.
5. WOOD FRAMING: 0.093 INCH (2.4 MM) SHANK BY 0.222 INCH (5.6 MM) HEAD BY 2 INCHES (51 MM) CORROSION RESISTANT SIDING NAILS.
6. WOOD FRAMING: 0.093 INCH (2.4 MM) SHANK BY 0.222 INCH (5.6 MM) HEAD BY 2-1/2 INCHES (64 MM) CORROSION RESISTANT NAILS.
7. WOOD FRAMING: 0.091 INCH (2.3 MM) SHANK BY 0.221 INCH (5.6 MM) HEAD BY 1-1/2 INCHES (38 MM) CORROSION RESISTANT SIDING NAILS.
8. WOOD FRAMING: 0.091 INCH (2.3 MM) SHANK BY 0.225 INCH (5.7 MM) HEAD BY 1-1/2 INCHES (38 MM) CORROSION RESISTANT SIDING NAILS.
9. WOOD FRAMING: 0.121 INCH (3 MM) SHANK BY 0.371 INCH (9.44 MM) HEAD BY 1-1/4 INCHES (32 MM) CORROSION RESISTANT ROOFING NAILS.
10. WOOD FRAMING: NO. 11 GAUGE 1-1/4 INCHES (38 MM) CORROSION RESISTANT ROOFING NAILS.
11. WOOD FRAMING: NO. 11 GAUGE 1-1/2 INCHES (38 MM) CORROSION RESISTANT ROOFING NAILS.
12. WOOD FRAMING: NO. 11 GAUGE 1-3/4 INCHES (44 MM) CORROSION RESISTANT ROOFING NAILS.
2.4 FINISHES
A. FACTORY PRIMER: PROVIDE FACTORY APPLIED UNIVERSAL PRIMER.
1. PRIMER: FACTORY PRIMED BY JAMES HARDIE.

A.
PART 3 EXECUTION

3.1 PREPARATION
A. CLEAN SURFACES THOROUGHLY PRIOR TO INSTALLATION.
B. PREPARE SURFACES USING THE METHODS RECOMMENDED BY THE MANUFACTURER FOR ACHIEVING THE BEST RESULT FOR THE SUBSTRATE UNDER THE PROJECT CONDITIONS.
C. INSTALL A WATER-RESISTIVE BARRIER IS REQUIRED IN ACCORDANCE WITH LOCAL BUILDING CODE REQUIREMENTS.
D. THE WATER-RESISTIVE BARRIER MUST BE APPROPRIATELY INSTALLED WITH PENETRATION AND JUNCTION FLASHING IN ACCORDANCE WITH LOCAL BUILDING CODE REQUIREMENTS.
3.2 INSTALLATION- HARDIEPLANK HZ10 LAP SIDING
A. INSTALL MATERIALS IN STRICT ACCORDANCE WITH THE MANUFACTURER'S INSTALLATION INSTRUCTIONS.
B. STARTING: INSTALL A MINIMUM 1/4 INCH (6 MM) THICK LATH STARTER STRIP AT THE BOTTOM COURSE OF THE WALL. APPLY PLANKS HORIZONTALLY WITH MINIMUM 1-1/4 INCHES (32 MM) WIDE LAPS AT THE TOP. THE BOTTOM EDGE OF THE FIRST PLANK OVERLAPS THE STARTER STRIP.
C. ALLOW MINIMUM VERTICAL CLEARANCE BETWEEN THE EDGE OF SIDING AND ANY OTHER MATERIAL IN STRICT ACCORDANCE WITH THE MANUFACTURER'S INSTALLATION INSTRUCTIONS.
D. ALIGN VERTICAL JOINTS OF THE PLANKS OVER FRAMING MEMBERS.
E. MAINTAIN CLEARANCE BETWEEN SIDING AND ADJACENT FINISHED GRADE.
F. LOCATE SPLICES AT LEAST ONE STUD CAVITY AWAY FROM WINDOW AND DOOR OPENINGS.
G. USE OFF-STUD METAL JOINER IN STRICT ACCORDANCE WITH THE MANUFACTURER'S INSTALLATION INSTRUCTIONS.
H. WIND RESISTANCE: WHERE A SPECIFIED LEVEL OF WIND RESISTANCE IS REQUIRED HARDIEPLANK LAP SIDING IS INSTALLED TO FRAMING MEMBERS AND SECURED WITH FASTENERS DESCRIBED IN TABLE NO. 2 IN NATIONAL EVALUATION SERVICE REPORT NO. NER-405.
I. FACE NAIL TO SHEATHING.
J. LOCATE SPLICES AT LEAST 12 INCHES (305 MM) AWAY FROM WINDOW AND DOOR OPENINGS.

0753 - ROOFING SYSTEM

2.01 MANUFACTURERS
A. ACCEPTABLE MANUFACTURER - ROOFING SYSTEM: FIRESTONE BUILDING PRODUCTS CO., CARMEL, IN WWW.FIRESTONEBPCO.COM
B. ROOFING SYSTEMS MANUFACTURED BY OTHERS MAY BE ACCEPTABLE PROVIDED THE ROOFING SYSTEM IS COMPLETELY EQUIVALENT IN MATERIALS AND WARRANTY CONDITIONS AND THE MANUFACTURER MEETS THE FOLLOWING QUALIFICATIONS:
1. SPECIALIZING IN MANUFACTURING THE ROOFING SYSTEM TO BE PROVIDED.
2. MINIMUM TEN YEARS OF EXPERIENCE MANUFACTURING THE ROOFING SYSTEM TO BE PROVIDED.
3. ABLE TO PROVIDE A NO DOLLAR LIMIT, SINGLE SOURCE ROOF SYSTEM WARRANTY THAT IS BACKED BY CORPORATE ASSETS IN EXCESS OF ONE BILLION DOLLARS.
4. ISO 9002 CERTIFIED.
5. ABLE TO PROVIDE POLYISOCYANURATE INSULATION THAT IS PRODUCED IN OWN FACILITIES.
C. MANUFACTURER OF INSULATION AND COVER BOARD: SAME MANUFACTURER AS ROOF MEMBRANE.
D. MANUFACTURER OF METAL ROOF EDGING: SAME MANUFACTURER AS ROOF MEMBRANE.
1. METAL ROOF EDGING PRODUCTS BY OTHER MANUFACTURERS ARE NOT ACCEPTABLE.
2. FIELD- OR SHOP-FABRICATED METAL ROOF EDGINGS ARE NOT ACCEPTABLE.

2.02 ROOFING SYSTEM DESCRIPTION
A. ROOFING SYSTEM:
1. MEMBRANE: SELF ADHERING THERMOPLASTIC POLYOLEFIN (TPO).
2. THICKNESS: AS SPECIFIED ELSEWHERE.
3. MEMBRANE ATTACHMENT: FULLY ADHERED.
4. SLOPE: DECK IS SLOPED, BUT POSSIBLY NOT ENOUGH. PROVIDE ADDITIONAL SLOPE TO ACHEIVE 1/4 INCH PER FOOT (1:48) BY MEANS OF TAPERED INSULATION.
5. COMPLY WITH APPLICABLE LOCAL BUILDING CODE REQUIREMENTS.
6. PROVIDE ASSEMBLY HAVING UNDERWRITERS LABORATORIES, INC. (UL) CLASS A, B, C, FIRE HAZARD CLASSIFICATION.
7. PROVIDE ASSEMBLY COMPLYING WITH FACTORY MUTUAL CORPORATION (FM) ROOF ASSEMBLY CLASSIFICATION, FM DS 1-28 AND 1-29, AND MEETING MINIMUM REQUIREMENTS OF FM 1-[60, 90, 120, 160] WIND UPLIFT RATING.

B. INSULATION:
1. TOTAL SYSTEM R VALUE: 20, MINIMUM.
2. MAXIMUM BOARD THICKNESS: 2 INCHES (50 MM); USE AS MANY LAYERS AS NECESSARY; STAGGER JOINTS IN ADJACENT LAYERS.

SYSTEM R VALUE*	TOTAL ISO INSULATION THICKNESS, NOMINAL
20 R	3.5 INCHES
25 R	4.5 INCHES
30 R	5.25 INCHES
35 R	6.25 INCHES

USE OF FIRESTONE ISOGARD HD COVER BOARD CAN PROVIDE AN ADDITIONAL 2.5 R VS. GYPSUM BASED COVER BOARDS. [EXAMPLE: 1.66 INCH ISO (9.45 R) + 1.66 INCH ISO (9.45 R) + .5 INCH HD ISO COVER BOARD (2.5 R) = 21.4 R]
*LONG TERM THERMAL RESISTANCE (LTTR) VALUES PROVIDE A 15 YEAR TIME WEIGHTED AVERAGE IN ACCORDANCE WITH ASTM 1289-13.
3. BASE LAYER: POLYISOCYANURATE FOAM BOARD, NON-COMPOSITE.
a. ATTACHMENT: MECHANICAL FASTENING, CONTACT ADHESIVE OR LOW-RISE POLYURETHANE ADHESIVE.
4. TOP LAYER: POLYISOCYANURATE FOAM BOARD, NON-COMPOSITE.
a. ATTACHMENT: MECHANICAL FASTENING, CONTACT ADHESIVE OR LOW-RISE POLYURETHANE ADHESIVE.
C. COVER BOARD: HIGH DENSITY POLYISOCYANURATE COVER BOARD:
1. THICKNESS: 0.5 INCH (12.7MM).
2. R-VALUE: 2.5 BASED ON ASTM TESTS C158 AND C177.
a. ATTACHMENT: MECHANICAL FASTENING, CONTACT ADHESIVE OR LOW-RISE POLYURETHANE ADHESIVE. OR COVER BOARD: GYPSUM-BASED COVER BOARD:
1. THICKNESS: 0.25 INCH (6.4MM).
2. R-VALUE: NEGLIGIBLE.
a. ATTACHMENT: MECHANICAL FASTENING, CONTACT ADHESIVE OR LOW-RISE POLYURETHANE ADHESIVE.

2.03 TPO MEMBRANE MATERIALS
A. MEMBRANE: FLEXIBLE, HEAT WELDABLE SHEET COMPOSED OF THERMOPLASTIC POLYOLEFIN POLYMER AND ETHYLENE PROPYLENE RUBBER; COMPLYING WITH ASTM D 6878, WITH POLYESTER WEFT INSERTED REINFORCEMENT AND THE FOLLOWING ADDITIONAL CHARACTERISTICS:
1. THICKNESS: 0.060 INCH (1.15 MM) PLUS/MINUS 10 PERCENT, WITH COATING THICKNESS OVER REINFORCEMENT OF 0.021 INCH (0.54 MM) PLUS/MINUS 10 PERCENT.
2. PUNCTURE RESISTANCE: 300 LBF (1.334 N), MINIMUM, WHEN TESTED IN ACCORDANCE FTM 101C METHOD 2031.
3. SOLAR REFLECTANCE: 0.74, MINIMUM, WHEN TESTED IN ACCORDANCE WITH ASTM C 1549. [WHITE]
4. COLOR: WHITE (OR TAN OR GRAY BY SPECIAL ORDER ONLY)
5. ACCEPTABLE PRODUCT: ULTRAPLY TPO SA WITH SECURE BOND TECHNOLOGY BY FIRESTONE.
B. MEMBRANE FASTENERS: TYPE AND SIZE AS REQUIRED BY ROOF MEMBRANE MANUFACTURER FOR ROOFING SYSTEM AND WARRANTY TO BE PROVIDED; USE ONLY FASTENERS FURNISHED BY ROOF MEMBRANE MANUFACTURER.
C. CURB AND PARAPET FLASHING: SAME MATERIAL AS MEMBRANE, WITH ENCAPSULATED EDGE WHICH ELIMINATES NEED FOR SEAM SEALING THE FLASHING-TO-ROOF SPLICE; PRECUT TO 18 INCHES (457 MM) WIDE.
D. FORMABLE FLASHING: NON-REINFORCED, FLEXIBLE, HEAT WELDABLE SHEET, COMPOSED OF THERMOPLASTIC POLYOLEFIN POLYMER AND ETHYLENE PROPYLENE RUBBER.
1. THICKNESS: 0.060 INCH (1.52 MM) PLUS/MINUS 10 PERCENT.
2. TENSILE STRENGTH: 1550 PSI (10.7 MPA), MINIMUM, WHEN TESTED IN ACCORDANCE WITH ASTM D 638 AFTER HEAT AGING.
3. ELONGATION AT BREAK: 650 PERCENT, MINIMUM, WHEN TESTED IN ACCORDANCE WITH ASTM D 638 AFTER HEAT AGING.
4. TEARING STRENGTH: 12 LBF (53 N), MINIMUM, WHEN TESTED IN ACCORDANCE WITH ASTM D 1004 AFTER HEAT AGING.
5. COLOR: SAME AS FIELD MEMBRANE.
6. ACCEPTABLE PRODUCT: ULTRAPLY TPO FLASHING BY FIRESTONE.
E. TAPE FLASHING: 5-1/2 INCH (140 MM) NOMINAL WIDE TPO MEMBRANE LAMINATED TO CURED RUBBER POLYMER SEAMING TAPE, OVERALL THICKNESS 0.065 INCH (1.6 MM) NOMINAL; TPO QUICKSEAM FLASHING BY FIRESTONE.
F. POURABLE SEALER: TWO-PART POLYURETHANE, TWO-COLOR FOR MM). RELIABLE MIXING; POURABLE SEALER BY FIRESTONE.
G. SEAM PLATES: STEEL WITH BARBS AND GALVALUME COATING; CORROSION-RESISTANCE COMPLYING WITH FM 4470.
H. TERMINATION BARS: ALUMINUM BARS WITH INTEGRAL CAULK LEDGE; 1.3 INCHES (33 MM) WIDE BY 0.10 INCH (2.5 MM) THICK; FIRESTONE TERMINATION BAR BY FIRESTONE.
I. CUT EDGE SEALANT: SYNTHETIC RUBBER-BASED, FOR USE WHERE MEMBRANE REINFORCEMENT IS EXPOSED; ULTRAPLY TPO CUT EDGE SEALANT BY FIRESTONE.
J. GENERAL PURPOSE SEALANT: EPDM-BASED, ONE PART, WHITE GENERAL PURPOSE SEALANT; ULTRAPLY TPO GENERAL PURPOSE SEALANT BY FIRESTONE.
K. MOLDED FLASHING ACCESSORIES: UNREINFORCED TPO MEMBRANE PRE-MOLDED TO SUIT A VAR

ARCHITECTURAL SPECIFICATIONS - CONTINUED

2.04 ROOF INSULATION AND COVER BOARDS

A. POLYISOCYANURATE BOARD INSULATION: CLOSED CELL POLYISOCYANURATE FOAM WITH BLACK GLASS REINFORCED MAT LAMINATED TO FACES, COMPLYING WITH ASTM C 1289 TYPE II CLASS 1, WITH THE FOLLOWING ADDITIONAL CHARACTERISTICS: OWENS CORNING DENSDECK OR BETTER:
   1. THICKNESS: AS INDICATED ELSEWHERE.
   2. SIZE: 48 INCHES (1220 MM) BY 96 INCHES (2440 MM), NOMINAL.
   3. EXCEPTION: INSULATION TO BE ATTACHED USING ADHESIVE OR ASPHALT MAY BE NO LARGER THAN 48 INCHES (1220 MM) BY 48 INCHES (1220 MM), NOMINAL.
   4. R-VALUE (LTTR): 1.0 INCH (25 MM) THICKNESS: 5.7 R, MINIMUM.
   5. COMPRESSIVE STRENGTH: 20 PSI (138 KPA) WHEN TESTED IN ACCORDANCE WITH ASTM C 1289.
   6. OZONE DEPLETION POTENTIAL: ZERO; MADE WITHOUT CFC OR HCFC BLOWING AGENTS.
   7. RECYCLED CONTENT: 19 PERCENT POST-CONSUMER AND 15 PERCENT POST-INDUSTRIAL, AVERAGE.
   8. ACCEPTABLE PRODUCT: ISO 95+ POLYISO BOARD INSULATION BY FIRESTONE OR
   9. ACCEPTABLE PRODUCT: RESISTA POLYISO BOARD INSULATION BY FIRESTONE (OPTIONAL MOLD RESISTANT MATERIAL PER ASTM D3273) CHOOSE ONE/ ELIMINATE ONE. MATCH WITH ROOFING SYSTEM DESCRIPTION CHOICE ABOVE;

B. HIGH DENSITY POLYISOCYANURATE COVER BOARD: NON-COMBUSTIBLE, WATER RESISTANT HIGH DENSITY, CLOSED CELL POLYISOCYANURATE CORE WITH COATED GLASS MAT FACERS, COMPLYING WITH ASTM D 1623, AND WITH THE FOLLOWING ADDITIONAL CHARACTERISTICS:
   1. SIZE: 48 INCHES (1220 MM) BY 96 INCHES (2440 MM), NOMINAL.
      a. EXCEPTION: BOARD TO BE ATTACHED USING ADHESIVE OR ASPHALT MAY BE NO LARGER THAN 48 INCHES (1220 MM) BY 48 INCHES (1220 MM), NOMINAL.
   2. THICKNESS: 0.5 INCH (12.7MM).
   3. R-VALUE: 2.5 R BASED ON ASTM TESTS C158 AND C177.
   4. SURFACE WATER ABSORPTION: <3%, MAXIMUM, WHEN TESTED IN ACCORDANCE WITH ASTM C 209.
   5. COMPRESSIVE STRENGTH: 120PSI, WHEN TESTED IN ACCORDANCE WITH ASTM 1621.
   6. DENSITY: 5PCF, WHEN TESTED IN ACCORDANCE WITH ASTM 1622.
   7. FACTORY MUTUAL APPROVED FOR USE WITH FM 1-60 AND 1-90 RATED ROOFING ASSEMBLIES.
   8. MOLD GROWTH RESISTANCE: PASSED, WHEN TESTED IN ACCORDANCE WITH ASTM D 3273.
   9. ACCEPTABLE PRODUCT: ISOGARD HD COVER BOARD BY FIRESTONE.

B. GYPSUM-BASED COVER BOARD: NON-COMBUSTIBLE, WATER RESISTANT GYPSUM CORE WITH EMBEDDED GLASS MAT FACERS, COMPLYING WITH ASTM C 1177/C 1177M, AND WITH THE FOLLOWING ADDITIONAL CHARACTERISTICS:
   1. SIZE: 48 INCHES (1220 MM) BY 96 INCHES (2440 MM), NOMINAL.
      a. EXCEPTION: BOARD TO BE ATTACHED USING ADHESIVE OR ASPHALT MAY BE NO LARGER THAN 48 INCHES (1220 MM) BY 48 INCHES (1220 MM), NOMINAL.
   2. THICKNESS: 0.25 INCH (6.4MM).
   3. SURFACE WATER ABSORPTION: 2.5 G, MAXIMUM, WHEN TESTED IN ACCORDANCE WITH ASTM C 473.
   4. SPANNING CAPABILITY: AS RECOMMENDED BY MANUFACTURER FOR MAXIMUM FLUTE SPANS.
   5. SURFACE BURNING CHARACTERISTICS: FLAME SPREAD OF 0, SMOKE DEVELOPED OF 0, WHEN TESTED IN ACCORDANCE WITH ASTM E 84.
   6. COMBUSTIBILITY: NON-COMBUSTIBLE, WHEN TESTED IN ACCORDANCE WITH ASTM E 136.
   7. FACTORY MUTUAL APPROVED FOR USE WITH FM 1-60 AND 1-90 RATED ROOFING ASSEMBLIES.
   8. MOLD GROWTH RESISTANCE: ZERO GROWTH, WHEN TESTED IN ACCORDANCE WITH ASTM D 3273 FOR MINIMUM OF 4 WEEKS. RETAIN FOLLOWING ELEMENTS AS APPLICABLE TO YOUR PROJECT, ELIMINATE OTHERS.

C. INSULATION FASTENERS: TYPE AND SIZE AS REQUIRED BY ROOF MEMBRANE MANUFACTURER FOR ROOFING SYSTEM AND WARRANTY TO BE PROVIDED; USE ONLY FASTENERS FURNISHED BY ROOF MEMBRANE MANUFACTURER.

D. INSULATION ADHESIVE: TYPE AS REQUIRED BY ROOF MEMBRANE MANUFACTURER FOR ROOFING SYSTEM AND WARRANTY TO BE PROVIDED; USE ONLY ADHESIVE FURNISHED BY ROOF MEMBRANE MANUFACTURER.

2.05 METAL ACCESSORIES INCLUDE FOLLOWING ELEMENTS AS APPLICABLE TO YOUR PROJECT, ELIMINATE OTHERS;

A. METAL ROOF EDGING AND FASCIA: CONTINUOUS METAL EDGE MEMBER SERVING AS TERMINATION OF ROOF MEMBRANE AND RETAINER FOR METAL FASCIA; WATERTIGHT WITH NO EXPOSED FASTENERS; MOUNTED TO ROOF EDGE NAILER.
   1. WIND PERFORMANCE:
      a. MEMBRANE PULL-OFF RESISTANCE: 100 LBS/FT (1460 N/M), MINIMUM, WHEN TESTED IN ACCORDANCE WITH ANSI/SPRI ES-1 TEST METHOD RE-1, CURRENT EDITION.
      b. FASCIA PULL-OFF RESISTANCE: AT LEAST THE MINIMUM REQUIRED WHEN TESTED IN ACCORDANCE WITH ANSI/SPRI ES-1 TEST METHOD RE-2, CURRENT EDITION.
      c. PROVIDE PRODUCT LISTED IN CURRENT FACTORY MUTUAL RESEARCH CORPORATION APPROVAL GUIDE WITH AT LEAST FM 1-270 WIND UPLIFT RATING.
   2. DESCRIPTION: TWO-PIECE; 45 DEGREE SLOPED GALVANIZED STEEL SHEET EDGE MEMBER SECURING TOP AND BOTTOM EDGES OF FORMED METAL FASCIA; FIRESTONE EDGEGARD.
   3. FASCIA FACE HEIGHT: 5 INCHES (127 MM).
   4. EDGE MEMBER HEIGHT ABOVE NAILER: 1-1/4 INCHES (31
   5. LENGTH: 144 INCHES (3650 MM).
   6. FUNCTIONAL CHARACTERISTICS: FASCIA RETAINER SUPPORTS WHILE ALLOWING FOR FREE THERMAL CYCLING OF FASCIA.
   7. ALUMINUM BAR: CONTINUOUS 6063-T6 ALLOY ALUMINUM EXTRUSION WITH PRE-PUNCHED SLOTTED HOLES; MITERS WELDED; INJECTION MOLDED EPDM SPLICES TO ALLOW THERMAL EXPANSION.
   8. ANCHOR BAR CLEAT: 20 GAGE, 0.036 INCH (0.9 MM) G90 COATED COMMERCIAL TYPE GALVANIZED STEEL WITH PRE-PUNCHED HOLES.
   9. CURVED APPLICATIONS: FACTORY MODIFIED.
   10. FASTENERS: FACTORY-PROVIDED CORROSION RESISTANT FASTENERS, WITH DRIVERS; NO EXPOSED FASTENERS PERMITTED.
   11. SPECIAL SHAPED COMPONENTS: PROVIDE FACTORY-FABRICATED PIECES NECESSARY FOR COMPLETE INSTALLATION, INCLUDING MITERS, CORNERS, AND END CAPS; MINIMUM 14 INCH (355 MM) LONG LEGS ON CORNER PIECES.
   12. SCUPPERS: WELDED WATERTIGHT.
   13. ACCESSORIES: PROVIDE MATCHING BRICK WALL CAP, DOWNSPOUT, EXTENDERS, AND OTHER SPECIAL FABRICATIONS AS SHOWN ON THE DRAWINGS.

B. PARAPET COPINGS: FORMED METAL COPING WITH GALVANIZED STEEL ANCHOR/SUPPORT CLEATS FOR CAPPING ANY PARAPET WALL; WATERTIGHT, MAINTENANCE FREE, WITHOUT EXPOSED FASTENERS; BUTT TYPE JOINTS WITH CONCEALED SPLICE PLATES; MECHANICALLY FASTENED AS INDICATED; FIRESTONE PTCF.
   1. WIND PERFORMANCE:
      a. AT LEAST THE MINIMUM REQUIRED WHEN TESTED IN ACCORDANCE WITH ANSI/SPRI ES-1 TEST METHOD RE-3, CURRENT EDITION.
      b. PROVIDE PRODUCT LISTED IN CURRENT FACTORY MUTUAL RESEARCH CORPORATION APPROVAL GUIDE WITH AT LEAST FM 1-90 RATING.
   2. DESCRIPTION: COPING SECTIONS ALLOWED TO EXPAND AND CONTRACT FREELY WHILE LOCKED IN PLACE ON ANCHOR CLEATS BY MECHANICAL PRESSURE FROM HARDENED STAINLESS STEEL SPRINGS FACTORY ATTACHED TO ANCHOR CLEATS; 8 INCH (200 MM) WIDE SPLICE PLATES WITH FACTORY APPLIED DUAL NON-CURING SEALANT STRIPS CAPABLE OF PROVIDING WATERTIGHT SEAL.
   3. MATERIAL AND FINISH: 24 GAGE, 0.024 INCH (0.06 MM) THICK GALVANIZED STEEL WITH KYNAR 500 FINISH IN MANUFACTURER'S STANDARD COLOR; MATCHING CONCEALED JOINT SPLICE PLATES; FACTORY-INSTALLED PROTECTIVE PLASTIC FILM.
   4. DIMENSIONS:
      a. WALL WIDTH: AS INDICATED ON THE DRAWINGS.
      b. PIECE LENGTH: MINIMUM 144 INCHES (3650 MM).
      c. CURVED APPLICATION: FACTORY FABRICATED IN TRUE RADIUS.
   5. ANCHOR/SUPPORT CLEATS: 20 GAGE, 0.036 INCH (0.9 MM) THICK PREPUNCHED GALVANIZED CLEAT WITH 12 INCH (305 MM) WIDE STAINLESS STEEL SPRING MECHANICALLY LOCKED TO CLEAT AT 72 INCHES (1820 MM) ON CENTER.
   6. SPECIAL SHAPED COMPONENTS: PROVIDE FACTORY-FABRICATED PIECES NECESSARY FOR COMPLETE INSTALLATION, INCLUDING MITERS, CORNERS, INTERSECTIONS, CURVES, PIER CAPS, AND END CAPS; MINIMUM 14 INCH (355 MM) LONG LEGS ON CORNER, INTERSECTION, AND END PIECES.
   7. FASTENERS: FACTORY-FURNISHED; ELECTROLYTICALLY COMPATIBLE; MINIMUM PULL OUT RESISTANCE OF 240 POUNDS (109 KG) FOR ACTUAL SUBSTRATE USED; NO EXPOSED FASTENERS. 2.06 ACCESSORY MATERIALS

A. WOOD NAILERS: PS 20 DIMENSION LUMBER, STRUCTURAL GRADE NO. 2 OR BETTER SOUTHERN PINE, DOUGLAS FIR; OR PS 1 ,APA EXTERIOR GRADE PLYWOOD; PRESSURE PRESERVATIVE TREATED.
   1. WIDTH: 3-1/2 INCHES (90 MM), NOMINAL MINIMUM, OR AS WIDE AS THE NAILING FLANGE OF THE ROOF ACCESSORY TO BE ATTACHED TO IT.
   2. THICKNESS: SAME AS THICKNESS OF ROOF INSULATION.

0760 - FLASHING & SHEET METAL

A. GENERAL: PROVIDE FLASHING AND SHEET METAL, REGLETS, AND ACCESSORIES AS REQUIRED FOR ROOF REPAIRS AS FOR COMPLETE, WEATHERTIGHT INSTALLATION.

B. STANDARDS: CONFORM TO SMACNA "ARCHITECTURAL SHEET METAL MANUAL" REQUIREMENTS FOR FLASING AND SHEET METAL.

C. DESIGN REQUIREMENTS: ALLOW FOR MOVEMENT OF COMPONENTS WITHOUT CAUSING BUCKLING, FAILURE OF JOINT SEALS, UNDUE STRESS OF FASTENERS OR OTHER DETRIMENTAL EFFECTS WHEN SUBJECT TO 100 YEAR SEASONAL TEMPERATURE RANGES.

D. SUBMITTALS: FURNISH PRODUCT DATA FOR MANUFACTURED PRODUCTS.

E. WARRANTY: CORRECT FAILURE OF METAL FLASHING SYSTEM TO RESIST PENETRATION OF WATER AND DAMAGE FROM WIND; WARRANTY PERIOD TWO YEARS.

F. FLASHING AND SHEET METAL: MATCH EXISTING, BUT NOT LESS THAN FLOLLOWING:
   1. GALVANIZED METAL FLASHING: ASTM A526 GALVANIZED STEEL WITH MINIMUM 0.02 COOPER, AND WITH MINIMUM G90 GALVANIZED COATING; MINIMUM 20 GAGE.
   2. PREFINISHED METAL FLASHING: 20 GAGE GALVANIZED STEEL WITH FACTORY FINISHED KYNAR 500 TYPE FLUOROPOLYMER COATING AND STIPPABLE PROTECTIVE FILM; COLOR AS SELECTED FROM MANUFACTURER'S FULL RANGE OF COLORS.
   3. ALUMINUM FLASHING: ASTM B209, ALLOY AS REQUIRED TO MATCH FINISH SPECIFIED FOR OTHER ALUMINUM COMPONENTS; THICKNESS MINIMUM 0.050" SOFT TEMPER.
   4. STAINLESS STEEL SHEET METAL: ASTM A666, 2D ANNEALED FINISH, SOFT TEMPER EXCEPT WHERE HARDER TEMPER IS REQUIRED FOR FORMING OR PERFORMANCE; 0.050" (28 GAGE) TYPICAL.
   5. COPPER SHEET METAL: ASTM B370, COLD ROLLED 16OZ. (0.0216") THICK; SOFT TEMPER WHERE REQUIRED FOR FORMING.

G. REGLETS: FRY/SPRINGLOK OR MM SYSTEM/SNAP-TITE REGLETS; FABRICATE OF SAME METAL AS ADJACENT FLASHING AND SHEET METAL.

H. METAL TO METAL SEALANT: BUTYL TYPE; NOT-STAINING, NON-CORROSIVE, NON-SHRINKING, NON-SAGGING, UNTRA-VIOLET AND OZONE RESISTANT.

I. INSTALLATION: COMPLY WITH SMACNA MANUAL.
   1. INSTALL METAL FLASHING AND SHEET METAL IN ACCORDANCE WITH SMACNA ARCHITECTURAL SHEET METAL MANUAL; TIGHT IN PLACE, WITH CORNERS SQUARE, SURFACES TRUE AND STRAIGHT IN PLANES, AND LINES ACCURATE TO PROFILES AS INDICATED ON DRAWINGS.
   2. INSTALL SEALANTS WHERE REQUIRED TO PREVENT DIRECT WEATHER PENETRATION.
   3. COMPLETE INSTALLATION SHALL BE FREE OF RATTLES, NOISE DUE TO THERMAL AND AIR MOVEMENT AND WIND WHISTLES.

0790 -CAULKING & SEALANTS

A. DESCRIPTION:
   WORK INCLUDED: SUPPLY AND INSTALL ALL CAULKING AND SEALANTS WORK AS SHOWN ON DRAWINGS AND SPECIFIED HEREIN. THIS SHALL INCLUDE, BUT NOT IS LIMITED TO; THE FOLLOWING:
   a. ALUMINUM ENTRANCE SYSTEM & WINDOWS-SPECIFIED UNDER SECTION 0815 ALUMINUM ENTRANCE SYSTEM.
   b. TOILET FIXTURES: CAULK BY PLUMBING CONTRACTOR, COLOR- WHITE.
   c. WATER OR WASTE PENETRATIONS: CAULK BY PLUMBING CONTRACTOR, COLOR- WHITE
   d. COMPRESSION CUP MAY BE PROVIDED IN LIEU OF CAULK.
   e. TILE CORNERS CAULK BY GENERAL CONTRACTOR, COLOR - TBD
   f. TILE AT COOLER WALLS: CAULK BY GENERAL CONTRACTOR, COLOR -TBD
   g. TILE AT CEILING GRID: CAULK BY GENERAL CONTRACTOR, COLOR- TBD
   h. VANITY TOPS & WAITRESS STATION: CAULK BY GENERAL CONTRACTOR, COLOR- CLEAR.
   i. PAPER TOWEL DISPENSER: CAULK BY GENERAL CONTRACTOR, COLOR- CLEAR.
   j. HOLLOW METAL DOORS: CAULK BY GENERAL CONTRACTOR, COLOR- CLEAR
   k. HOOD WALLS: CAULK BY GENERAL CONTRACTOR, COLOR- TBD
   l. PASS THRU: CAULK BY GENERAL CONTRACTOR, COLOR- TBD
   m. EXTERIOR SEALANTS: SEALANT BY GENERAL CONTRACTOR, COLOR - TBD

B. MATERIALS
   GENERAL INTERIOR CAULK: ONE PART ACRYLIC LATEX CAULK. 90% SOLIDS MINIMUM. USE AS RECOMMENDED BY MANUFACTURER (AS GENERAL PURPOSE INTERIOR SEALANT). ACCEPTABLE MANUFACTURER: DOW CORNING.
   1.2. JOINT BACKING: COMPRESSIBLE ROD OF MATERIAL AS RECOMMENDED BY SEALANT MANUFACTURER FOR JOINT TYPES AND WIDTHS INDICATED ON CONSTRUCTION DRAWINGS.
   1.3. JOINT CLEANER, SEALERS, AND PRIMER SHALL BE USED AS RECOMMENDED BY MANUFACTURER.

C. INSTALLATION
   1.1. JOINT BACKING MATERIAL SHALL BE A WIDTH GREATER THAN THE JOINT, AS RECOMMENDED BY THE MANUFACTURER, TO GUARANTEE A TIGHT FIT WHEN FORCED INTO PLACE.
   1.2 APPLY MATERIALS IN STRICT ACCORDANCE WITH MANUFACTURER'S PRINTED INSTRUCTIONS: OBSERVE MANUFACTURER'S REQUIREMENTS REGARDING TEMPERATURE CONTROL, USABILITY OF MATERIALS, AND PROTECTION OF ADJACENT SURFACES.
   1.1. MAKING SEALING SURFACE SLIGHTLY CONCAVE FREE OF WRINKLES AND SKIPS: UNIFORMLY SMOOTH AND WITH PERFECT ADHESION ALONG BOTH SIDES OF JOINT. PROTECT ADJACENT SURFACES FROM EXCESS MATERIALS LEAVE JOINTS IN A CLEAN NEAT CONDITION. DEFECTIVE JOINTS SHALL BE REMOVED, CLEANED AND REPLACED AT NO ADDITIONAL COST TO THE OWNER.SET THRESHOLDS IN FULL BED OF CAULKING AND ANCHOR WITH EXPANSION ANCHORS.

0810 HOLLOW METAL DOORS & FRAMES

A. DESCRIPTION
   1.1. REFER TO DOOR SCHEDULE FOR LOCATIONS AND TYPES OF DOORS REQUIRED.

B. PRODUCTS
   1.1. HOLLOW METAL FRAMES- GENERAL
      a. COLD ROLLED 18 GAUGE LABELED FRAMES WHERE REQUIRED.
      b. FRAMES SHALL RECEIVE TWO COATS OF RUST INHIBITIVE PRIMER. PROVIDE THREE (3) RUBBER BUMPERS AT EACH DOOR.
      c. ALL FRAMES TO BE WELDED HOLLOW METAL.
      d. APPROVED MANUFACTURERS: STEELCRAFT, CECO, TRUSSBILT, AMWELD, AND FENESTRA
   1.2 HOLLOW METAL FRAMES - WELDED (INTERIOR & EXTERIOR)
      a. SAW MITER AND CONTINUOUSLY WELD CORNER JOINTS FOR FULL JAMB DEPTH AND WIDTH OF FRAME AND TRIM. CONTACT EDGES SHALL BE CLOSED TIGHT WELDS ON EXPOSED SURFACES DRESSED SMOOTH AND FLUSH. PRIME COAT PAINT.
      b. PROVIDE CHAMBER AT HINGE CUTOUTS TO ALLOW ATTACHMENT OF HINGES AFTER FRAME IS FILLED WITH GROUT.
   1.3 HOLLOW METAL DOORS
      a. DOORS SHALL BE FLUSH DESIGN, OF SIZE INDICATED ON DOOR SCHEDULE
      b. CORE SHALL CONSIST OF STRUCTURAL HONEYCOMB OR SOLID POLYSTYRENE CORE BANDED TO BOTH FACES.
      c. APPROVED MANUFACTURERS: STEELCRAFT, CECO, TRUSSBILT, AMWELD, AND FENESTRA

C. INSTALLATION
   1.1. FRAMES, WHICH ARE SCHEDULED FOR LABEL CONSTRUCTION, SHALL BE INSTALLED USING UL-APPROVED ANCHORING. FRAMES SHALL BE PROPERLY PREPARED TO RECEIVE UL-APPROVED HARDWARE AND SHALL HAVE PROPER LABEL ATTACHED AT THE FACTORY.
   1.2. ALL FRAMES SHALL BE COMPLETED WITH JAMB ANCHORS FOR ATTACHING TO MASONRY WALLS, OR OTHER ANCHORS, AS REQUIRED BY THE PARTICULAR INSTALLATION.
   1.3. AT THE TIME OF INSTALLATION, THE DOOR JAMBS SHOULD BE HELD ¼ " OFF THE EXISTING CONCRETE FLOOR, BEFORE FLOOR TILE IS INSTALLED.
   1.4. INSTALL ALL HOLLOW METAL DOORS AND FRAMES ACCORDING TO MANUFACTURER'S SPECIFICATIONS.
   1.5. FILL ALL WELDED FRAMES WITH MORTAR.

0815 ALUMINUM WINDOW SYSTEMS

A. DESCRIPTION
   1.1. FURNISH AND INSTALL ALL GLAZING, GLASS AND DOOR FRAMES, BARRIER BARS, AND EXTERIOR WINDOW WALL SYSTEM, INCLUDING ALL HARDWARE, ACCESSORIES, AND CAULKING, REQUIRED FOR A COMPLETE WATERTIGHT INSTALLATION AS DETAILED ON THE DRAWINGS AND HEREINAFTER SPECIFIED.

B. PRODUCTS
   1.1. ALUMINUM COMPONENTS: 22,000 PSI PER ULTIMATE TENSILE STRENGTH ALLOY, NOT LESS THAN 0.125 " WALL THICKNESS. 1-3/4 " X 4.5" FRAME SIZE.
   1.2. FASTENING: ALUMINUM, STAINLESS STEEL OR CADMIUM PLATED CARBON STEEL
   1.3. WEATHERSTOP DOOR OPENINGS WITH BLACK PLOY-PILE WEATHER-STRIPPING.
   1.4. GLASS STOPS: WITHOUT VISIBLE FASTENINGS SNAP-IN TYPE BLACK, FOR PUTTY LESS GLAZING.
   1.5. HARDWARE: REFER TO DOCUMENTS
   1.6. FINISH: REFER TO DOCUMENTS
   1.7. DOORS TO BE MEDIUM STILE TO MEET APPLICABLE AAMA REQUIREMENTS CONCERNING SILLS AND STRENGTHS.
   1.8. CAULKING COLOR TO MATCH FRAME.
   1.9. MANUFACTURERS:
      a. DOORS AND FRAMES: KAWNEER OR VISTAWALL.

C. INSTALLATION
   1.1. FABRICATE AND INSTALL EXTERIOR UNITS TO WITHSTAND WIND PRESSURE LOAD OF 26 POUNDS PER SQUARE FOOT OVER ENTIRE FRAME, AND PANEL AREA, ACTING INWARD AND OUTWARD.

0850 - PASS-THRU WINDOW

MANUAL OPERATED, SELF-CLOSING, BI-PARTING PASS-THRU WINDOW IN ANODIZED ALUMINUM FRAME.
PRE-GLAZED WINDOW, SEE EXTERIOR ELEVATION AND DOOR AND WINDOW SCHEDULE FOR ADDITION INFORMATION. UNIT AS MANUFACTURED BY:

QUICKSERV CORP.
P.O. BOX 40466
HOUSTON, TX 77240
CONTACT: WADE ARNOLD

0870 FINISH HARDWARE

A. DESCRIPTION
   1.1. INSTALL ALL FINISH HARDWARE ON DOORS INDICATED ON DOOR SCHEDULE.
   1.2. COORDINATION: HARDWARE TEMPLATES AND SCHEDULES SHALL BE SENT TO HOLLOW METAL MILLWORK WOOD DOOR SUPPLIER TO COORDINATE THE NECESSARY PREPARATION.

B. PRODUCTS
   1.1. ALL HARDWARE TO MEET REQUIREMENTS LISTED IN THE DOOR SCHEDULE UNLESS OTHERWISE NOTED.
   1.2. ALL ALUMINUM ENTRANCE SYSTEM HARDWARE ROLLING GRILLES & OVERHEAD FIRE DOORS & SHUTTER HARDWARE IS BY MANUFACTURER.

C. INSTALLATION
   1.1. MOUNT ALL HARDWARE UNITS AT HEIGHTS RECOMMENDED IN "RECOMMEND LOCATIONS FOR BUILDERS HARDWARE" BY NBHA, EXCEPT AS OTHERWISE SPECIFICALLY INDICATED OR REQUIRED TO COMPLY WITH GOVERNING HANDICAPPED REGULATIONS. THESE SHALL BE AS FOLLOWS:
      a. LOCK SETS AND LATCH SETS- 40"
      b. EXIT DEVICE CROSSBAR- 37"
      c. CENTER OF DOOR PULL- 42"
      d. CENTER OF PUSH PLATE- 48"
      e. DEADLOCK- 60"
   1.2 INSTALL HARDWARE ITEMS COMPLYING WITH MANUFACTURER'S INSTRUCTIONS AND RECOMMENDATIONS. REMOVE HARDWARE FROM SURFACES TO BE FINISHED AFTER INSTALLATION AND STORE UNTIL SURFACE FINISH IS APPLIED; THEN REINSTALL.
   1.3. ADJUST EACH OPERATING ITEM OF HARDWARE TO INSURE PROPER OPERATION OF FUNCTION OF UNIT.
   1.4 LUBRICATE MOVING PARTS AS RECOMMENDED BY MANUFACTURER.
   1.5 INSTALL ALL WEATHER-STRIPPING IN STRICT ACCORDANCE WITH MANUFACTURER'S WRITTEN RECOMMENDATIONS. FIT WEATHER-STRIPPING TIGHTLY AT CORNERS TO MAINTAIN CONTINUITY AROUND PERIPHERY OF DOOR.
   1.6 CLEAN HARDWARE AS RECOMMENDED BY MANUFACTURER.

0880 GLASS & GLAZING

A. DESCRIPTION
   1.1. FURNISH AND INSTALL ALL GLASS INDICATED ON THE DRAWINGS AND SPECIFIED HEREIN.

B. MATERIALS
   1.1. GLAZING COMPOUND:
      a. (TT-P-781), TYPE 1 OR TYPE 2 MINIMUM AND ACCESSORIES SUCH AS POINTS, SETTING BLOCKS, SHIMS, STOP BEADS, ANGLES, WIRING SPRING CLIPS SHALL BE THE TYPE RECOMMENDED BY THE GLASS MANUFACTURER.

C. TYPES:
   1.1. 5/8 " TEMPERED INSULATING GLASS IN EXTERIOR ALUMINUM DOORS.
   1.2. 1" TEMPERED INSULATING GLASS @ EXTERIOR LOCATIONS.
   1.3. 1/4" TEMPERED GLASS @ INTERIOR LOCATIONS.
   1.4. PROVIDE 35% DUAL REFLECTIVE WINDOW FILM ON 2ND SURFACE (INSIDE).

D. INSTALLATION
   1.1. PERFORM ALL GLAZING WORK IN ACCORDANCE WITH THE MINIMUM STANDARDS OF THE FLAT GLASS JOBBERS ASSOCIATION (FGJA) GLAZING MANUAL.
   1.2. ALL GLASS FACTORY LABELED ON EACH PANE. DIMENSIONS SHOWN ON DRAWINGS ARE GIVEN ONLY AS A GUIDE FOR ESTIMATING PURPOSES, AND ACTUAL SIZE SHALL BE DETERMINED BY MEASUREMENT OF THE ACTUAL OPENINGS. GLASS SHALL BE ACCURATELY CUT TO FIT THESE OPENINGS.
   1.3. INSPECT WINDOWS AND OTHER FRAMES TO DETERMINE THAT THE FRAMES, SASH AND STOPS ARE SET TRUE AND STRAIGHT. SASH RABBETS AND STOPS SHALL BE CLEAN AND DRY AT THE TIME OF GLAZING. BEFORE GLAZING METAL SASH REMOVE ANY OIL, LACQUER, OR OTHER MATERIAL TO WHICH THE COMPOUND WILL NOT READILY ADHERE OR WHICH WILL TEND TO DELAMINATE FROM THE METAL AND CAUSE A LEAK THROUGH THE GLAZING SEAL.

0925 GYPSUM DRYWALL

A. DESCRIPTION
   1.1. PROVIDE ALL LABOR AND MATERIALS NECESSARY TO COMPLETE THE INSTALLATION OF THE GYPSUM WALLBOARD AND METAL STUD FRAMING SYSTEM INDICATED.
   1.2. COMPLY WITH ALL APPLICABLE REQUIREMENTS OF "AMERICAN STANDARDS SPECIFICATION FOR THE APPLICATION AND FINISHING OF GYPSUM WALLBOARD" BY THE AMERICAN STANDARDS ASSOCIATION, EXCEPT WHERE MORE STRINGENT REQUIREMENTS ARE CALLED FOR HEREIN, IN LOCAL CODES, OR BY MANUFACTURER OF WALLBOARD.
   1.3. MAINTAIN TEMPERATURE OF DRYWALL SPACE IN RANGE OF 55 DEGREES TO 90 DEGREES F. UNTIL BUILDING IS ENTIRELY CLOSED AND VENTILATED, AS REQUIRED TO ELIMINATE EXCESSIVE MOISTURE BUILD UP IN THE BUILDING.

B. PRODUCTS
   1.1. METAL FRAMING SYSTEM
      a. RUNNER: MINIMUM 20 GAUGE EXTERIOR WALL GALVANIZED STEEL WITH LEGS NOT LESS THAN ONE INCH HIGH, SLIGHTLY BENT IN TO HOLD THE STUDS BY FRICTION.
      b. STUDS: 20 GAUGE 6", 3-5/8", 2-1/2", AND 1-1/2" PUNCHED, SCREW-TYPE, MINIMUM ASTM C645. HOT DIPPED STEEL OR ELECTRO-GALVANIZED STEEL, WITH FLANGES NOT LESS THAN 1-1/4" SIDE. STUD DEPTH SHALL BE AS REQUIRED FOR WALL-FINISHED THICKNESS ON DRAWINGS.
      c. FURRING CHANNELS: ASTM C 645, 22 GAUGE, HAT SHAPED.
      d. MANUFACTURERS: CELOTEX,FLINTKOTE, JOHNS-MANVILLE, KAISER, NATIONAL GYPSUM, US GYPSUM, WHELLING CORRUGATING CO.
   2.1. GYPSUM WALLBOARD
      a. GYPSUM WALLBOARD: USE 5/8" TYPE X THROUGHOUT UNLESS OTHERWISE INDICATED.
      b. MOISTURE RESISTANT WALLBOARD: USE 5/8" ON ALL WET WALLS IN RESTROOMS, UTILITY, AND KITCHEN.
      c. HARDWARE AND ACCESSORIES REQUIRED FOR COMPLETE INSTALLATION TO BE PROVIDED BY THE CONTRACTOR INCLUDING THE FOLLOWING:
      d. CORNER BEAD, "L" TYPE METAL TRIM AT EXPOSED DRYWALL EDGES AND WHERE DRYWALL ABUTS DISSIMILAR CONSTRUCTION.
      e. RESILIENT CHANNELS AND FURRING CHANNELS AS REQUIRED.
      f. JOINT FINISHING MATERIALS TO BE MANUFACTURER'S BEST-RECOMMENDED MATERIALS FOR A THREE COMPOUND TREATMENT.
      g. APPROVED DRYWALL MANUFACTURERS: CELOTEX, FLINTKOTE, GEORGIA-PACIFIC, JOHNS-MANVILLE, KAISER GYPSUM, NATIONAL GYPSUM, US GYPSUM.

C. INSTALLATION
   1.1. FRAMING: ANCHORAGE RUNNER SHALL BE ALIGNED ACCURATELY AT FLOOR AND CEILING AND SECURELY ANCHORED APPROXIMATELY TWO (2) INCHES FROM THE RUNNER ENDS. FLOOR RUNNER AND CEILING RUNNER SHALL BE SECURED MAXIMUM 24" O.C.
   1.2 TAPING & FINISHING
      a. MIX JOINT AND FINISHING COMPOUND PER MANUFACTURER'S DIRECTIONS.
      b. CENTER TAPE OVER JOINT AND EMBED IN UNIFORM LAYER OF JOINT COMPOUND OF SUFFICIENT WIDTH AND DEPTH TO PROVIDE FIRM AND COMPLETE BOND. APPLY SKIN COAT OVER EMBEDDED TAPE.
      c. TREAT ANGLES WITH REINFORCING TAPE FOLDED TO CONFORM TO ADJACENT SURFACES AND STRAIGHT TRUE ANGLES.
      d. ALLOW COMPOUND TO THOROUGHLY DRY FOR AT LEAST 24 HOURS.
      e. OVER JOINT COMPOUND AND TAPE, APPLY COAT OF FINISHING COMPOUND. SPREAD EVENLY AND FEATHER OUT BEYOND EDGE OF BOARD. AFTER FIRST FINISHING COAT IS THOROUGHLY DRY (AT LEAST 24 HOURS), COVER WITH SECOND COAT, WITH EDGES FEATHERED OUT SLIGHTLY BEYOND PRECEDING COAT.
      f. GIVE ALL DIMPLES AT FASTENER HEADS, AND ALL MARRED SPOTS ON SURFACE OF BOARD, ONE COAT JOINT COMPOUND AND TWO COATS FINISHING COMPOUND APPLIED, AS EACH COAT IS APPLIED TO JOINTS.
      g. INSTALL METAL CORNER REINFORCEMENT AT ALL EXTERNAL CORNERS, EXCEPT ENDS OF HOOD WALL. CONCEAL FLANGES OR METAL REINFORCEMENT WITH AT LEAST TWO COATS OF COMPOUND. WHEN COMPLETED COMPOUND SHALL EXTEND APPROXIMATELY 8 INCHES TO 10 INCHES ON EACH SIDE OF METAL NOSING.
      h. AFTER EACH APPLICATION OF JOINT OR FINISHING COMPOUND HAS DRIED, LIGHTLY SAND ALL JOINTS. LEAVE ALL BOARD AND TREATED AREAS UNIFORMLY SMOOTH AND READY FOR TEXTURING. DO NOT ROUGH PAPER.

0950 ACOUSTICAL TREATMENT

A. GENERAL: PROVIDE ACOUSTICAL CEILINGS INCLUDING SUSPENSION SYSTEM, TRIM AND ACCESSORIES AS REQUIRED FOR COMPLETE FINISHED INSTALLATION.

B. STANDARDS: CONFORM TO ASTM C635 FOR METAL SUSPENSION SYSTEM AND ASTM C636 FOR INSTALLATION OF ACOUSTICAL CEILINGS.

C. PERFORMANCE REQUIREMENTS: PROVIDE PRODUCTS LISTED BY UNDERWRITERS LABORATORIES (UL)
   1. FLAME SPREAD/ MODE DENSITY: PROVIDE PRODUCTS MEETING CODE REQUIREMENTS OR MAXIMUM 25 FLAME SPREAD AND SMOKE DEVELOPED INDEX 50 OR LESS.

D. SEISMIC REQUIREMENTS: COMPLY WITH STATE AND LOCAL CODE REQUIREMENTS FOR SEISMIC BRACING OF CEILING SUSPENSION SYSTEM, AND WITH ASTM E580.

E. SUBMITTALS: SUBMIT PRODUCT DATA, SHOP DRAWINGS INDICATION LAYOUT, AND SAMPLES OF GRID, TRIM AND CEILING UNITS.

F. INSTALLER: FIRM WITH MINIMUM THREE YEARS SUCCESSFUL EXPERIENCE IN PROJECTS OF SIMILAR TYPE AND SCOPE: ACCEPTANCE TO MANUFACTURER OF ACOUSTICAL UNITS.

G. PROJECT CONDITION: DO NOT INSTALL CEILING UNTIL BUILDING IS ENCLOSED, SUFFICIENT HEAT IS PROVIDED, DUST GENERATING ACTIVITIES HAVE TERMINATED AND OVERHEAD MECHANICAL WORK IS COMPLETED, TESTED AND APPROVED: ALLOW WET WORK T

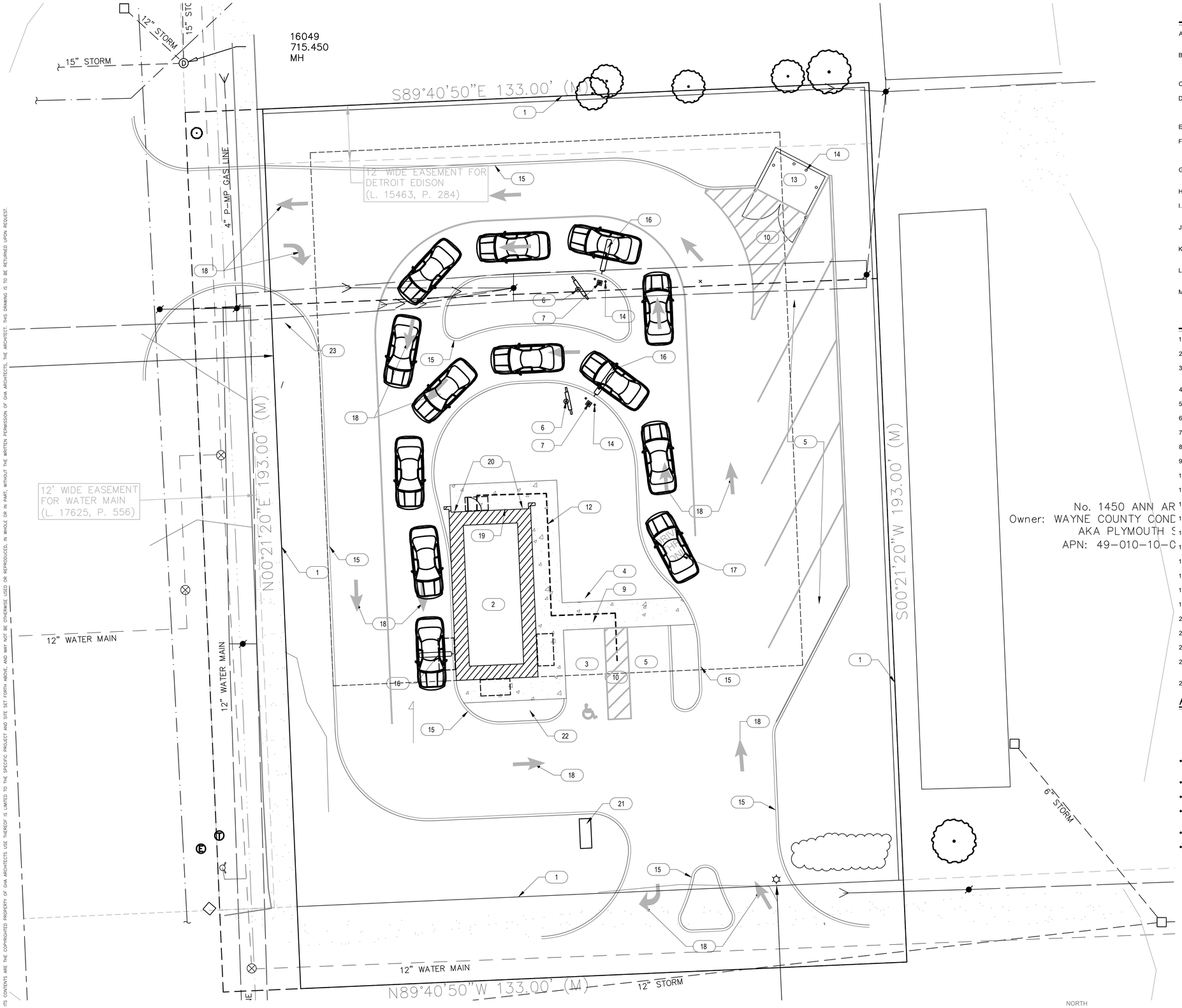

1 ENLARGED SITE PLAN

SCALE: 1" = 10'-0"

GENERAL NOTES

A. CONTRACTOR SHALL FIELD VERIFY TYPE OF SOILS. IF CORROSIVE SOILS ARE ENCOUNTERED, TAKE NECESSARY PRECAUTIONS FOR ALL UNDER GROUND WORK

B. NO STRUCTURE OF ANY KIND TO BE CONSTRUCTED ON, OVER OR PLACED WITHIN THE PUBLIC UTILITY EASEMENTS EXCEPT WOOD, WIRE OR REMOVABLE SECTION TYPE FENCING AND/OR PAVING

C. CONTRACTOR TO COORDINATE STAGING AREAS AS REQUIRED

D. ANY DAMAGE BY CONTRACTOR OR SUBCONTRACTOR TO EXISTING ASPHALT PAVEMENT AND/OR EXISTING LANDSCAPING OUTSIDE OF CONSTRUCTION LIMIT LINE SHALL BE REPAIRED BY CONTRACTOR

E. CONTRACTOR SHALL FIELD VERIFY ANY (E) SITE CONDITIONS THAT MAY IMPEDE

F. NO MATERIALS SHALL BE STORED ON PUBLIC PROPERTY UNLESS AN ENCROACHMENT PERMIT IS FIRST OBTAINED FROM THE PUBLIC WORKS DEPARTMENT

G. CONTRACTOR SHALL PROVIDE CONSTRUCTION FENCE FOR PEDESTRIAN PROTECTION ACCORDING TO LOCAL REGULATIONS & BUILDING CODE

H. TEMPORARY TOILET FACILITIES SHALL BE PROVIDED

I. CONTRACTOR SHALL TAKE NECESSARY PRECAUTIONS TO ENSURE THE SAFETY OF THE OCCUPANTS & WORKERS AT ALL TIMES

J. ALL DEBRIS SHALL BE REMOVED FROM THE PREMISE DAILY & WORK AREAS SHALL BE LEFT IN A CLEAN (BROOM) CONDITION AT ALL TIMES

K. CIVIL DRAWINGS SHALL GOVERN ON CONFLICTS WITH OTHER DISCIPLINE'S DRAWINGS

L. CONTRACTORS SHALL BE RESPONSIBLE FOR COMPLETE SECURITY & SAFETY OF THE SITE WHILE THE JOB IS IN PROGRESS & UNTIL THE JOB IS COMPLETE

M. CONTRACTORS SHALL VERIFY ALL DIMENSIONS ON DRAWINGS FOR CONFLICTS PRIOR TO CONSTRUCTION; THE CONTRACTOR WILL NOTIFY THE ARCHITECT OF ANY DISCREPANCIES

KEYNOTES

X

1. PROPERTY LINE
2. NEW DRIVE-THRU COFFEE KIOSK, SEE SHEET A2.1
3. ACCESSIBLE PARKING SPACE WITH 2% MAX RUNNING AND CROSS SLOPE, SEE CIVIL DRAWINGS
4. ACCESSIBLE PARKING SIGN, SEE CIVIL DRAWINGS
5. EMPLOYEE PARKING
6. MENU BOARD, BY OTHERS
7. SPEAKER POST, BY OTHERS
8. HEIGHT CLEARANCE BAR, SEE DETAIL 3/A6.2
9. ACCESSIBLE RAMP, SEE CIVIL DRAWINGS
10. PAINTED STRIPPING AND MARKINGS, SEE CIVIL DRAWINGS & DETAIL 5/A6.2
11. "ONE WAY DRIVE THRU ONLY" SIGNAGE, SEE DETAIL 7/A6.2
12. ACCESSIBLE PATH OF TRAVEL
13. TRASH ENCLOSURE; LOCATE PER CIVIL DRAWINGS, SEE 1/A6.1
14. BOLLARDS, SEE CIVIL DRAWINGS - PAINT POSITIVE RED SHERMAN WILLIAMS SW6871
15. NEW CONCRETE CURB, SEE CIVIL DRAWINGS
16. LOOP SENSOR FOR MENU BOARD SPEAKER AND DRIVE THRU WINDOW, SEE DETAIL 2/A6.2
17. PAINTED SIGNAGE, SEE DETAIL 6/A6.2
18. PAINTED DIRECTION ARROW, SEE DETAIL 5/A6.2
19. ELECTRICAL SES METER, SEE ELECTRICAL DRAWINGS
20. ROOF DRAINS TO CONNECT TO UNDERGROUND DRAIN PIPE
21. MONUMENT SIGN, SEE ELECTRICAL DRAWINGS; SUBMITTED SEPARATELY
22. FLAGPOLE, SEE DETAIL 8/A6.2 AND STRUCTURAL DRAWINGS
23. ILLUMINATED DIRECTIONAL SIGN DISPLAY, SEE ELECTRICAL DRAWINGS; SUBMITTED SEPARATELY
24. STOP SIGN

ACCESSIBLE PATH OF TRAVEL

ACCESSIBLE PATH OF TRAVEL; SHALL BE MINIMUM 48" WIDE FROM ARRIVAL POINT TO THE MAIN ENTRANCE

- ACCESSIBLE PATH OF TRAVEL; SHALL BE MINIMUM 48" WIDE FROM ARRIVAL POINT TO THE MAIN ENTRANCE TO BE A BARRIER FREE ACCESS ROUTE
- WITHOUT ANY ABRUPT LEVEL CHANGES EXCEEDING 1/2"
- AT LEAST 48" IN WIDTH
- CROSS SLOPE DOES NOT EXCEED 2% AND SLOPE IN THE DIRECTION OF TRAVEL IS LESS THAN 5%
- SURFACE IS STABLE, FIRM AND SLIP RESISTANT
- FREE OF OVERHANGING OBSTRUCTIONS TO 80" MINIMUM, PROTRUDING OBJECTS GREATER THAN 4" PROJECTION FROM WALL & ABOVE 27" AND LESS THAN 80"

GHA
Architecture / Development
14901 Quorum Drive
Suite 300
Dallas Texas 75254
Ph: (972) 239-8884
Fax: (972) 239-5054

STATE OF MICHIGAN
KEVIN J. HENDERSON
ARCHITECT
No. 1301054109
LICENSED ARCHITECT
12/21/2021

EST. 1998
SCOOTER'S COFFEE

PROJECT ADDRESS:
1490 WEST ANN ARBOR ROAD
PLYMOUTH, MI 48170

REVISIONS:

TITLE:
ARCHITECTURAL SITE PLAN

DATE:
12/21/2021

PROJECT NO.
210536

- ☐ DESIGN DEVELOPMENT
- ☒ PERMIT SUBMITTAL
- ☒ BID PACKAGE
- ☐ CONSTRUCTION ISSUE

SHEET NO.

A1.1

THIS DRAWING AND ITS CONTENTS ARE THE COPYRIGHTED PROPERTY OF GHA ARCHITECTS USE THEREOF IS LIMITED TO THE SPECIFIC PROJECT AND SITE SET FORTH ABOVE, AND MAY NOT BE OTHERWISE USED OR REPRODUCED, IN WHOLE OR IN PART, WITHOUT THE WRITTEN PERMISSION OF GHA ARCHITECTS, THE ARCHITECT. THIS DRAWING IS TO BE RETURNED UPON REQUEST.

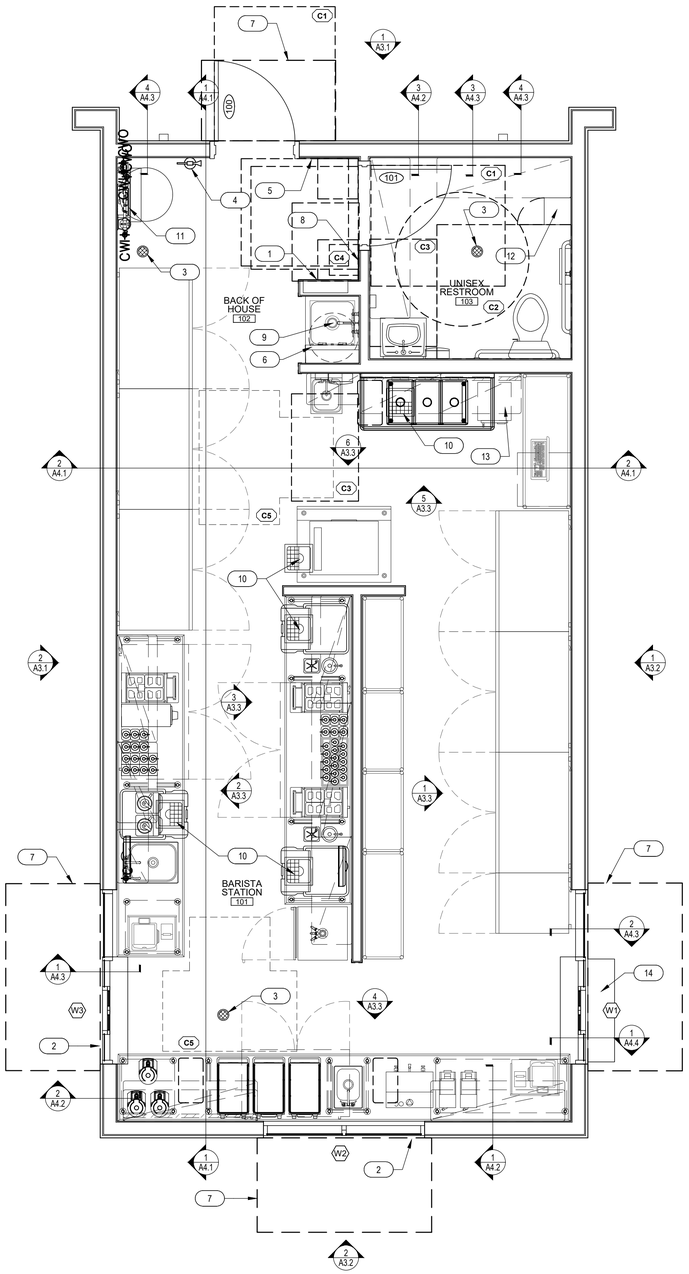

2 FLOOR PLAN

SCALE: 3/8" = 1'-0"

NORTH

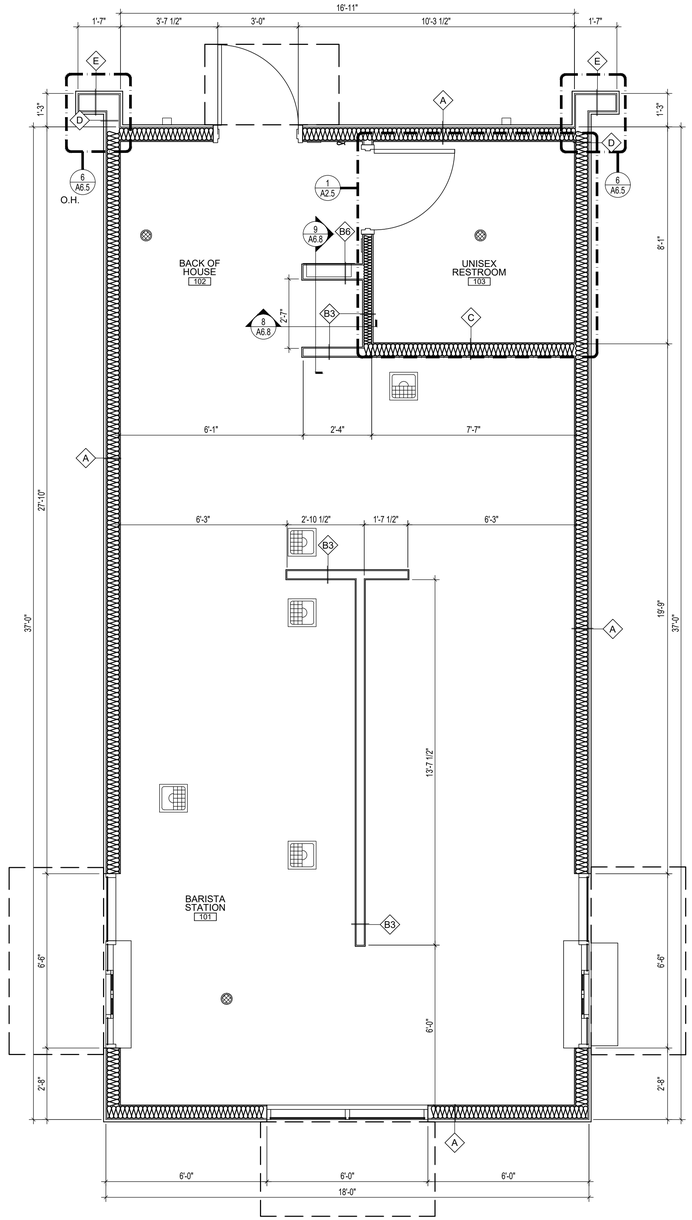

1 DIMENSION PLAN

SCALE: 3/8" = 1'-0"

NORTH

GENERAL NOTES

A. PROVIDE PAINTED METAL ACCESS PANELS IN WALLS AND CEILINGS AT CONCEALED ITEMS SUCH AS VALVES, SHOCK ABSORBERS, CONTROLS, SWITCHES, ETC. AND ANY ITEMS WHICH MAY REQUIRE ACCESS NOT OTHERWISE PROVIDED.
B. GENERAL CONTRACTOR WILL FURNISH AND INSTALL 5LB MULTIPURPOSE DRY CHEMICAL (2A/10BC) RATED FIRE EXTINGUISHERS WITH MOUNTING BRACKETS AND ACCESSORIES AT 4'-0" A.F.F. AS REQUIRED BY GOVERNMENTAL AUTHORITIES. MAXIMUM TRAVEL DISTANCE OF 75'-0" FOR PLACEMENT.
C. IT IS THE GENERAL CONTRACTOR'S RESPONSIBILITY TO COORDINATE, LOCATE, AND CONFIRM ALL FLOOR SINK, UNDERGROUND / OVERHEAD PLUMBING AND ELECTRICAL STUB-UPS.
D. SEE ROOM FINISH SCHEDULE FOR ALL ROOM FINISHES, SHEET A2.2.
E. SEE KITCHEN DRAWINGS FOR EQUIPMENT INFORMATION, SHEET K1.0
F. GENERAL CONTRACTOR TO CAULK AND SEAL ALL EXPANSION AND SAW CUT JOINTS AT ALL EXTERIOR/INTERIOR CONCRETE - SEE JOINT SEALERS SPECIFICATIONS.
G. ALL ITEMS SUCH AS LIGHT SWITCHES, FIRE EXTINGUISHERS, FIRE ALARM PULLS AND OTHER ITEMS TO BE LOCATED AS CLOSE AS POSSIBLE TO THE ADJACENT DOOR FRAME.
H. AT MOP SINK AND SINKS, PROVIDE 120 CLEANING SOLUTION DISPENSER ON HOSE BIBB SIDE.
I. THERE SHALL BE A MAXIMUM 1/2" OFFSET AT ALL THRESHOLDS AND AT ANY CHANGE OF FLOORING MATERIALS. OFFSETS GREATER THAN 1/4" REQUIRE A MAXIMUM BEVELED SLOPE OF 1 UNIT VERTICAL TO 2 UNITS HORIZONTAL.
J. ALL DOORS ARE 4" OFF ADJACENT WALLS UNO.
K. ALL EXTERIOR DOOR LANDING GRADES SHALL HAVE A SMOOTH TRANSITION TO THE ADJACENT PAVED SURFACE, AND THE MAX. RUNNING AND CROSS SLOPE OF ALL LANDINGS WILL BE 2%.
L. PROVIDE THERMOMETER ACCURATE TO 2 DEGREES FAHRENHEIT IN REFRIGERATORS IF ONE IS NOT INCLUDED WITH FIXTURE.
M. ALL HAND SINKS MUST BE PROVIDED WITH A HAND WASHING SIGN, PAPER TOWEL DISPENSER AND HAND SOAP DISPENSER.

WALL LEGEND

FRAMING / DIMENSIONING NOTE:
ALL DIMENSIONS ARE TO FACE OF STUD, TYP.

A — EXTERIOR WALL:
THIN BRICK/STONE VENEER OVER MORTAR SETTING BED OVER WEATHER RESISTANT BARRIER (WRB) OVER SHEATHING OVER 2x6" WOOD STUDS @ 16" O.C., 12" CEMENT BOARD AT BASE W/ 1/2" PLYWOOD ABOVE AND FRP PANEL TO 10'-6" A.F.F., PROVIDE BATT INSULATION PER COMCHECK IN ALL EXTERIOR WALLS.

B3 — INTERIOR PARTITION WALL:
2x4" WOOD STUDS @ 16" O.C., 12" CEMENT BOARD AT BASE W/ 1/2" PLYWOOD ABOVE AND FRP PANEL FINISH TO 10'-6" A.F.F. BOTH SIDES. PROVIDE R-13 ACOUSTICAL BATT INSULATION AT RESTROOM.

B6 — INTERIOR PARTITION WALL:
2x6" WOOD STUDS @ 16" O.C., 12" CEMENT BOARD AT BASE W/ 1/2" PLYWOOD ABOVE AND FRP PANEL FINISH TO 10'-6" A.F.F. BOTH SIDES. PROVIDE R-13 ACOUSTICAL BATT INSULATION AT RESTROOM.

C — PLUMBING PARTITION:
2x6" WOOD STUDS @ 16" O.C. 12" CEMENT BOARD AT BASE W/ 1/2" MOISTURE RESISTANT GYP BD ON RESTROOM SIDE AND 12" CEMENT BOARD AT BASE W/ 1/2" PLYWOOD FOR BACK OF HOUSE WITH FRP PANEL TO 10'-6" A.F.F. BOTH SIDES. PROVIDE R-13 ACOUSTICAL BATT INSULATION IN PARTITION.

D — EXTERIOR WING WALL:
HARDIE BOARD OVER WEATHER RESISTANT BARRIER (WRB) OVER SHEATHING OVER 2x6" WOOD STUDS @ 16" O.C., SHEATHING AND BREAK METAL ONE SIDE.

E — EXTERIOR WING WALL:
2x8" WOOD STUDS @ 16" O.C. OVER WEATHER RESISTANT BARRIER (WRB) OVER SHEATHING AND BREAK METAL BOTH SIDES.

KEYNOTES - FLOOR PLAN (X)

1. NEW ELECTRICAL PANEL, SEE ELECTRICAL DRAWINGS
2. GRAPHICS ON WINDOW BY OWNER
3. FLOOR DRAIN, SEE PLUMBING DRAWINGS
4. 2A-10BC MINIMUM RATED FIRE EXTINGUISHER
5. PROVIDE TACTILE EXIT SIGN AT EXIT DISCHARGE
6. WATER HEATER ABOVE, SEE PLUMBING DRAWINGS
7. LINE OF CANOPY ABOVE BY OTHERS
8. ACCESSIBLE RESTROOM SIGN
9. MOP SINK, SEE PLUMBING DRAWINGS
10. FLOOR SINK, SEE PLUMBING DRAWINGS
11. R.O. SYSTEM, SEE PLUMBING DRAWINGS
12. 6 DOOR EMPLOYEE LOCKERS ANCHORED TO WALL BY GC
13. FLOOR SAFE BY OWNER, BOLTED TO FLOOR BY G.C.
14. SERVICE SHELF EQ. TO QUICKSERV SHELF MODEL # QSS-4612-S/S

CLEARANCE KEYNOTE (XX)

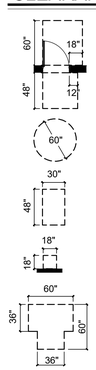

C1 DOOR WITH A CLOSER AND A LATCH

C2 CIRCULAR TURNABOUT

C3 CLEAR FLOOR SPACE

C4 TACTILE SIGNS

C5 T-TURN

DOOR LEGEND	
#	DOOR TAG. REFER TO SCHEDULE ON SHEET A5.2
WINDOW LEGEND	
#	WINDOW TAG. REFER TO DETAILS ON SHEET A5.1

GHA
Architecture / Development
14901 Quorum Drive
Suite 300
Dallas Texas 75254
Ph: (972) 239-8884
Fax: (972) 239-5054

STATE OF MICHIGAN
KEVIN HENDERSON
ARCHITECT
No. 1301058109
LICENSED ARCHITECT
12/21/2021

EST. 1998 SCOOTER'S COFFEE

PROJECT ADDRESS:
1490 WEST ANN ARBOR ROAD
PLYMOUTH, MI 48170

REVISIONS:

TITLE:
DIMENSION PLAN & FLOOR PLAN

DATE:
12/21/2021

PROJECT NO.
210536

- [ ] DESIGN DEVELOPMENT
- [x] PERMIT SUBMITTAL
- [x] BID PACKAGE
- [ ] CONSTRUCTION ISSUE

SHEET NO.
A2.1

THIS DRAWING AND ITS CONTENTS ARE THE COPYRIGHTED PROPERTY OF GHA ARCHITECTS USE THEREOF IS LIMITED TO THE SPECIFIC PROJECT AND SITE SET FORTH ABOVE, AND MAY NOT BE OTHERWISE USED OR REPRODUCED, IN WHOLE OR IN PART, WITHOUT THE WRITTEN PERMISSION OF GHA ARCHITECTS. THE ARCHITECT, THIS DRAWING IS TO BE RETURNED UPON REQUEST.

FINISH SCHEDULE

X

CODE	DESCRIPTION	MANUFACTURER	STYLE / PATTERN / COLOR	NOTES
FRP	FIBER REINFORCED PLASTIC	CRANE COMPOSITES	WHITE (GLASBOARD WITH SURFASEAL)	
B-1	VINYL WALL BASE	JOHNSONITE	40 BLACK B (4" H X .80" THICK)	PROVIDE SILICONE SEALANT AT FLOOR
B-2	QUARRY TILE	DALITE	DIAMOND TREAD (SANDED GROUT)	ALTERNATE AS REQUIRED BY JURISDICTION
F-1	SEALED CONCRETE	SHERMAN WILLIAMS	LEVEL 2 FINISH, SHER-HARD CLEAR SEALER	SEALER SHALL BE HEALTH DEPARTMENT APPROVED
F-2	QUARRY TILE	DALITE	DIAMOND TREAD (SANDED GROUT)	ALTERNATE AS REQUIRED BY JURISDICTION
P-1	PAINT	SHERMAN WILLIAMS	SITEWHITE #7070	INTERIOR DOOR AND INSIDE OF EXTERIOR DOOR
P-2	PAINT	SHERMAN WILLIAMS	INKWELL #6992	OUTSIDE OF EXTERIOR DOOR

NOTE:
NO ALTERATIONS ON FINISHES WITHOUT CORPORATE APPROVAL

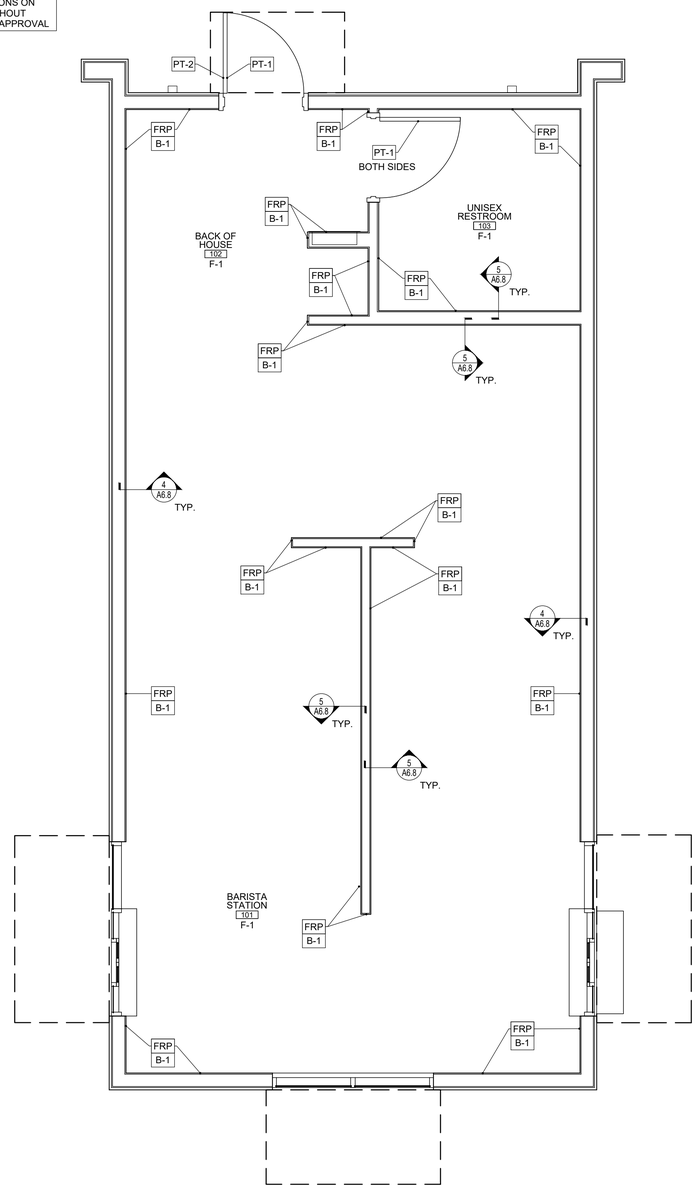

1 FINISH FLOOR PLAN
SCALE: 3/8" = 1'-0"

NORTH

GENERAL NOTES

A. REFER TO WALL SECTIONS AND ELEVATIONS FOR ADDITIONAL INFORMATION AND REQUIREMENTS.

B. INTERIOR WALL AND CEILING FINISH MATERIALS SHALL BE INSTALLED IN ACCORDANCE WITH ALL APPLICABLE CODES.

C. ALL FINISHES SHALL MEET FLAME SPREAD AND SMOKE DEVELOPMENT RATINGS FOR THEIR USE, AS REQUIRED BY LOCAL CODES.

D. G.C SHALL CAULK JOINT BETWEEN CEILING GRID & FRP WALL PANELS IN ALL KITCHEN, JANITOR AND OFFICE AREAS.

E. ALL HOLLOW METAL DOORS AND FRAMES (U.N.O.), SHALL BE PRIMED & PAINTED

F. INSTALL MATERIAL OF THE LONGEST PRACTICAL LENGTHS & SIZES TO MINIMIZE THE NUMBER OF JOINTS

G. IF APPLICABLE, G.C. SHALL APPLY DIAMOND 35 SEALANT AND WAX TO ALL QUARRY TILE & COVE BASE. VERIFY WITH OWNER THE TIMING AND APPLICATION OF SEALER.

H. THE ARCHITECT ASSUMES THE GENERAL CONTRACTOR HAS INCLUDED IN HIS BID THE HIGHEST QUALITY AND GREATEST QUANTITY FOR THE PURPOSE OF RESOLVING ANY CONFLICTS IN THE CONSTRUCTION DOCUMENTS WHICH ARE IMPLIED OR UNDEFINED.

I. ANY DECORATIONS USED SHALL BE NON-COMBUSTIBLE OR FLAME PROOFED IN AN APPROVED MANNER.

J. THE CONTRACTOR SHALL PROTECT ALL ADJACENT MATERIALS AND EQUIPMENT AGAINST DAMAGE FROM SPILLAGE, DRIPPING AND SPATTER OF COATING MATERIALS. REPLACE DAMAGED TILE AS REQUIRED. ALL BUILDING MATERIALS AND EQUIPMENT SHALL BE LEFT CLEAN, WITH ALL DAMAGED SURFACES CORRECTED. PROVIDE "WET PAINT" SIGNS TO INDICATE NEWLY PAINTED SURFACES.

K. ALL GROUT TO CONTAIN ACRYLIC ADDITIVE SEALER.

L. ALL FINISHES SHALL BE CLASS C WITH FLAME SPREAD INDEX OF 76-200 AND SMOKE DEVELOPMENT INDEX OF 0-450.

GHA
Architecture / Development
14901 Quorum Drive
Suite 300
Dallas Texas 75254
Ph: (972) 239-8884
Fax: (972) 239-5054

STATE OF MICHIGAN
KEVIN HENDERSON
ARCHITECT
No. 4001054109
LICENSED ARCHITECT
12/21/2021

EST. 1998
SCOOTER'S COFFEE

PROJECT ADDRESS:
1490 WEST ANN ARBOR ROAD
PLYMOUTH, MI 48170

REVISIONS:

TITLE:
FLOOR FINISH AND FINISH SCHEDULE

DATE:
12/21/2021

PROJECT NO.
210536

- [ ] DESIGN DEVELOPMENT
- [x] PERMIT SUBMITTAL
- [x] BID PACKAGE
- [ ] CONSTRUCTION ISSUE

SHEET NO.
A2.2

THIS DRAWING AND ITS CONTENTS ARE THE COPYRIGHTED PROPERTY OF GHA ARCHITECTS. USE THEREOF IS LIMITED TO THE SPECIFIC PROJECT AND SITE SET FORTH ABOVE, AND MAY NOT BE OTHERWISE USED OR REPRODUCED, IN WHOLE OR IN PART, WITHOUT THE WRITTEN PERMISSION OF GHA ARCHITECTS, THE ARCHITECT. THIS DRAWING IS TO BE RETURNED UPON REQUEST.

ROOF DRAIN CALCULATIONS

ROOF AREA: 554 SQ.FT.
PARAPET AREA: 496/2 = 248 SQ.FT.
TOTAL AREA: 802 SQ.FT.

MINIMUM REQUIRED SCUPPER (WORSE CASE 6" PER HOUR): 2" X 3"
PROVIDED: (1) 4"X6" MAIN SCUPPER AND (1) 4"X6" OVERFLOW SCUPPER

NOTE: ROOF IS DESIGNED TO HOLD ANY POTENTIAL PONDING WATER IF ONE ROOF SCUPPER SHOULD BECOME CLOGGED

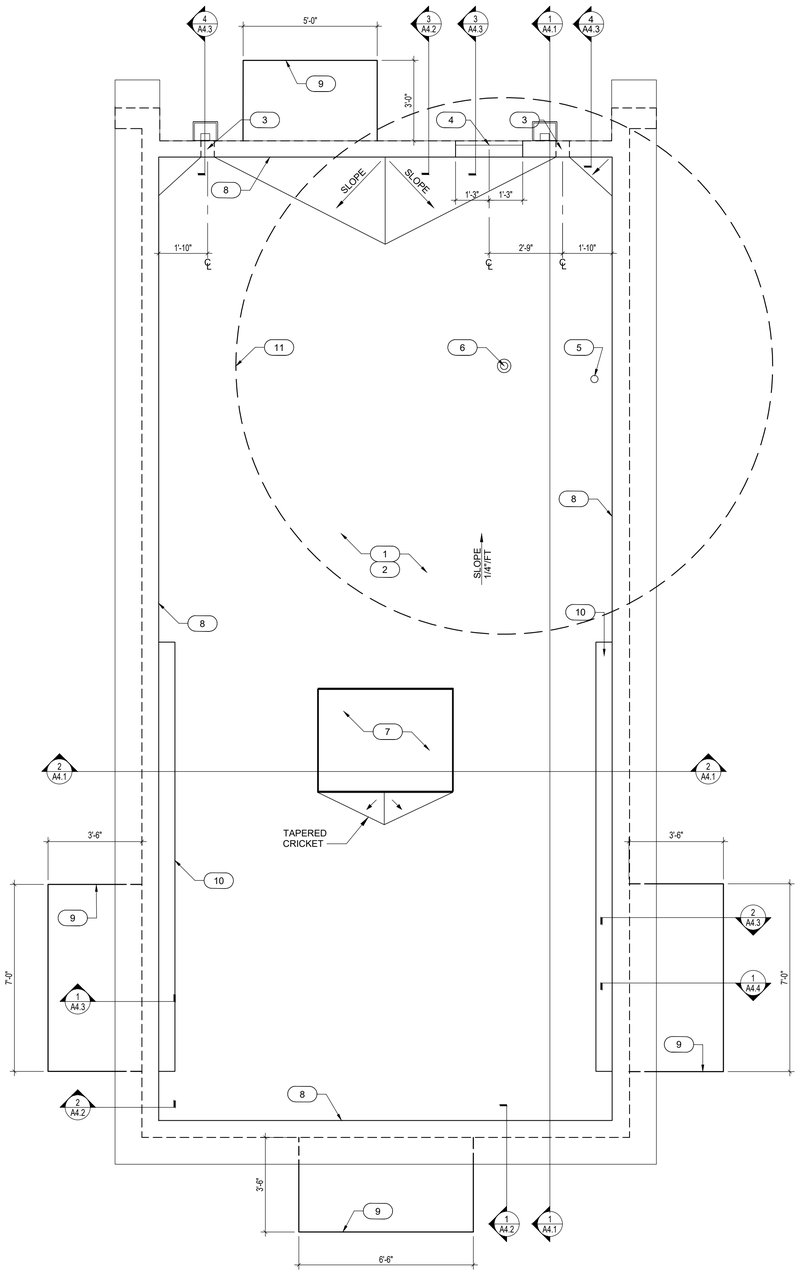

2 ROOF PLAN
SCALE: 3/8" = 1'-0"

NORTH

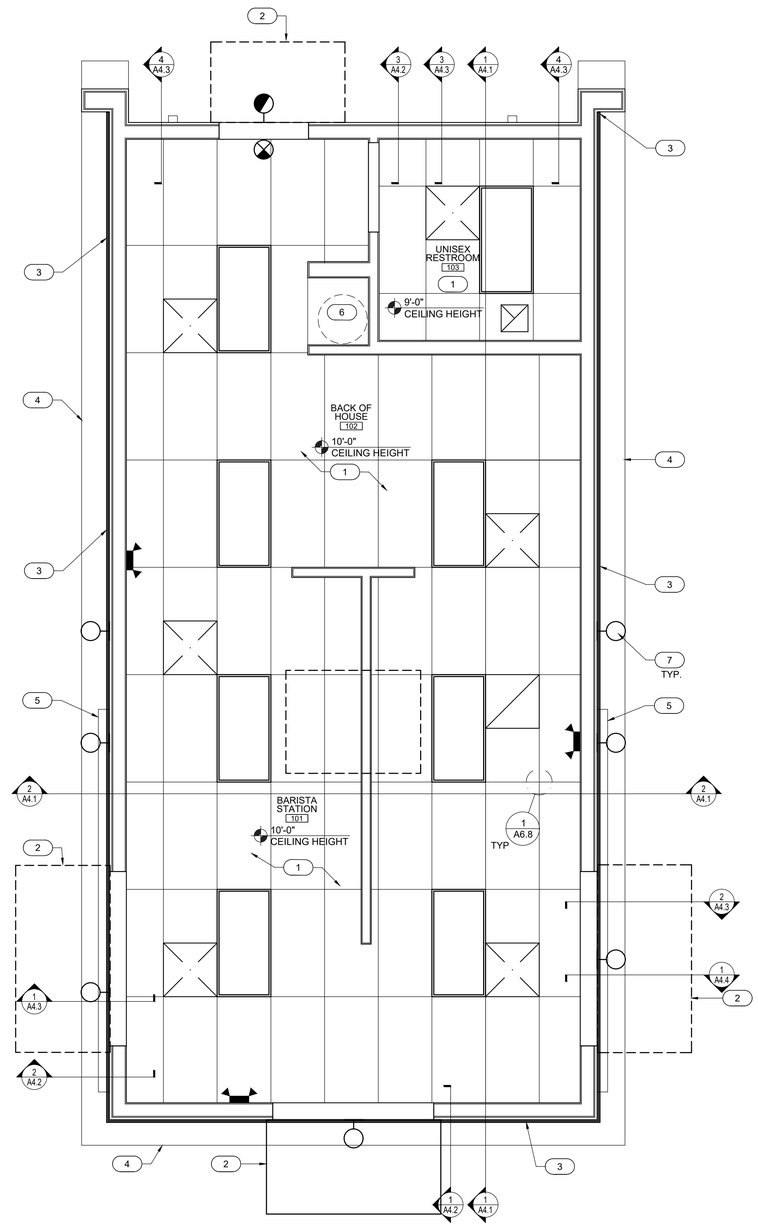

1 REFLECTED CEILING PLAN
SCALE: 3/8" = 1'-0"

NORTH

CEILING LEGEND

SYMBOL	FIXTURE	NOTES
	2'x4' SURFACE MOUNTED LIGHT FIXTURE WITH PRISMATIC LENS	MOUNTING - LAY-IN GRID
	SUPPLY AIR GRILLE TITUS TMS 3 BLADE DIFFUSER OR SIMILAR	MOUNTING - LAY-IN GRID
	RETURN AIR RH45T COMMERCIAL T-BAR ALUMINUM GRILLE	MOUNTING - LAY-IN GRID
	TOILET ROOM EXHAUST FAN	MOUNTING - RECESSED
	EXTERIOR WALL SCONCE	
	EXTERIOR EMERGENCY WALL SCONCE	
	LED EXIT SIGN	
	EMERGENCY LIGHT W/BUG EYE	
	PERIMETER LED STRIP LIGHT	

NOTE: ALL LIGHTS TO BE PURCHASED BY FRANCHISEE OR GENERAL CONTRACTOR AND INSTALLED BY GENERAL CONTRACTOR.

CEILING MATERIAL LEGEND

ITEM	MFR (OR EQUAL)	MODEL NUMBER
TYPE "A"	ARMSTRONG	24" x 48" ARMSTRONG KITCHEN ZONE OR EQUAL TILES TO BE SMOOTH AND WASHABLE

GENERAL NOTES

A. WHERE LIGHT FIXTURES ARE MOUNTED IN A LAY-IN CEILING, PROVIDE A MINIMUM OF 2 SUPPORT WIRES ATTACHED DIRECTLY BETWEEN EACH LIGHT FIXTURE AND THE BUILDING STRUCTURE. SUPPORT WIRES SHALL BE A MINIMUM OF 12 GAUGE GALVANIZED STEEL WIRE, SOFT ANNEALED.

B. FIXTURES ARE REQUIRED AT ALL LIGHTING OUTLETS SHOWN ON THE DRAWINGS. APPROVED LIGHTING FIXTURE WIRE IS REQUIRED IN ALL FIXTURES AND FIXTURE RACEWAYS. WEATHERPROOF WIRING IS REQUIRED FOR EXTERIOR FIXTURES. ALL PARTS OF FIXTURES AND WIRING SHALL BE IN ACCORDANCE WITH NECESSARY REQUIREMENTS.

C. ALL FIXTURES SHALL CARRY UL AND ETL LABELS. ALL FLUORESCENT FIXTURE BALLASTS SHALL BE HIGH FREQUENCY ELECTRONIC BALLASTS WITH A "TOTAL HARMONIC DISTORTION: OF LESS THAN 20%, REGARDLESS OF THE NUMBER OF LAMPS CONNECTED TO EACH BALLAST AND SHALL HAVE CBM LABEL. ALL FLUORESCENT FIXTURES INSTALLED SHALL INCORPORATE BALLAST PROTECTION. ALL FLUORESCENT BALLASTS SHALL HAVE AN AUDIBLE NOISE RATING OF "CLASS A" OR BETTER. ALL FLUORESCENT BALLASTS SHALL HAVE A POWER FACTOR GREATER THAN 98% WHEN USED WITH PRIMARY LAMP.

D. REFER TO SPECIFICATIONS FOR ROOF ASSEMBLY.

CEILING SPECIFICATION
ACOUSTICAL CEILING SYSTEM
EXPOSED TEE GRID USG DOWN DX GRID SYSTEMS AS MANUFACTURED BY USG INTERIORS OR EQUIVALENT.

HANGER WIRE, MINIMUM 12 GA. AWG GALVANIZED SOFT ANNEALED, MILD STEEL WIRE.

HANGER CUPS, PREFABRICATED METAL CLAMPS FOR FASTENING TO STRUCTURAL STEEL MEMBERS.

KEYNOTES- REFLECTED CEILING

1. NEW 2'X4' WASHABLE LAY-IN CEILING TILES. (FIRE RATING - CLASS A)
2. RED CANVAS AWNING FURNISHED AND INSTALLED BY OTHERS
3. PERIMETER LED AT EXTERIOR SOFFIT
4. BREAK METAL SOFFIT & CORNICE
5. SIGNAGE FURNISHED AND INSTALLED BY OTHERS. UNDER A SEPARATE PERMIT.
6. 24" x 30" OPENING FOR HOT WATER HEATER.
7. EXTERIOR LIGHTING, SEE ELEVATIONS, SEE ALSO ELECTRICAL DRAWINGS.

KEYNOTES-ROOF

1. 60 MIL TPO FULLY ADHERED OVER 1/2" DENSGLASS OVER POLYISOCYANURATE INSULATION (PER BUILDING COMCHECK ON G0.4) OVER SHEATHING, SEE DETAIL A6.4
2. CONTRACTOR ALTERNATIVE, AS ALLOWED BY CODE: 60 MIL TPO FULLY ADHERED OVER 1/2" DENSGLASS WITH BATT INSULATION APPLIED TO UNDERSIDE OF DECK
3. THRU WALL ROOF SCUPPER, SEE DETAIL 8/A6.3
4. OPENING IN PARAPET FOR ROOF ACCESS
5. VENT, SEE PLUMBING DRAWINGS, SEE ALSO DETAIL 2/A6.4
6. 6" GOOSENECK FOR EXHAUST, SEE DETAIL 2/A6.4 SIM.
7. ROOF TOP UNIT & CURB, SEE MECHANICAL DRAWINGS, SEE ALSO DETAIL 3/A6.4
8. PRE-FINISHED METAL PARAPET CAP
9. RED CANVAS AWNING BELOW, FURNISHED AND INSTALLED BY OTHERS
10. ROOFER TO FLASH ELECTRICAL RACEWAY FOR SIGNAGE ON SIDE OF PARAPET WALL - SIGNAGE UNDER SEPERATE PERMIT
11. PER CODE - NO AIR INTAKES MAY BE WITHIN A 10' RADIUS OF A VENT OR EXHAUST.

GHA
Architecture / Development
14901 Quorum Drive
Suite 300
Dallas Texas 75254
Ph: (972) 239-8884
Fax: (972) 239-5054

STATE OF MICHIGAN
KEVIN HENDERSON
ARCHITECT
No. 4501058109
LICENSED ARCHITECT
12/21/2021

EST. 1998
SCOOTER'S COFFEE

PROJECT ADDRESS:
1490 WEST ANN ARBOR ROAD
PLYMOUTH, MI 48170

REVISIONS:

TITLE:
REFLECTED CEILING PLAN & ROOF PLAN

DATE:
12/21/2021

PROJECT NO.
210536

- [ ] DESIGN DEVELOPMENT
- [x] PERMIT SUBMITTAL
- [x] BID PACKAGE
- [ ] CONSTRUCTION ISSUE

SHEET NO.
A2.4

THIS DRAWING AND ITS CONTENTS ARE THE COPYRIGHTED PROPERTY OF GHA ARCHITECTS USE THEREOF IS LIMITED TO THE SPECIFIC PROJECT AND SITE SET FORTH ABOVE, AND MAY NOT BE OTHERWISE USED OR REPRODUCED, IN WHOLE OR IN PART, WITHOUT THE WRITTEN PERMISSION OF GHA ARCHITECTS. THE ARCHITECT. THIS DRAWING IS TO BE RETURNED UPON REQUEST.

ACCESSORY FIXTURES (X)

EQ. NO.	ITEM NAME	QTY	MANUFACTURER	MODEL #	REMARKS#
F-1	36" STAINLESS STEEL GRAB BAR	1	BOBRICK	#B-5806x36	
F-2	42" STAINLESS STEEL GRAB BAR	1	BOBRICK	#B-5806x42	
F-3	18" STAINLESS STEEL GRAB BAR	1	BOBRICK	#B-5806x18	
F-4	WALL HUNG LAVATORY	1	BOBRICK		
F-5	PAPER TOWEL DISPENSER	1	BOBRICK	#B-2621	SURFACE MOUNTED
F-6	TOILET TISSUE DISPENSER	1	BOBRICK	#B-2840	SURFACE MOUNTED
F-7	WATER CLOSET	1			
F-8	SOAP DISPENSER	1	BOBRICK	#B-2111	SURFACE MOUNTED
F-9	WALL MOUNTED ACCESSIBLE SIGN	1			
F-10	WALL MOUNTED MIRROR	1	BOBRICK	#B-290	SURFACE MOUNTED

GENERAL NOTES

A. SEE SHEET G0.3 FOR FURTHER ACCESSIBILITY INFORMATION
B. SEE FINISH SCHEDULE SHEET A2.2 FOR FINISHES
C. SEE PLUMBING PLANS FOR ADDITIONAL FIXTURE INFORMATION
D. PROVIDE WOOD BLOCKING AS REQUIRED
E. DIMENSIONS NOTED ON THIS PLAN ARE TO FINISH SURFACE U.N.O.

CLEARANCE KEYNOTES (XX)

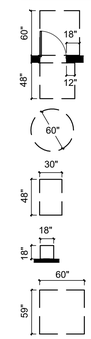

C1 DOOR WITH A CLOSER AND A LATCH
C2 CIRCULAR TURNABOUT
C3 CLEAR FLOOR SPACE
C4 TACTILE SIGNS
C5 WATER CLOSET

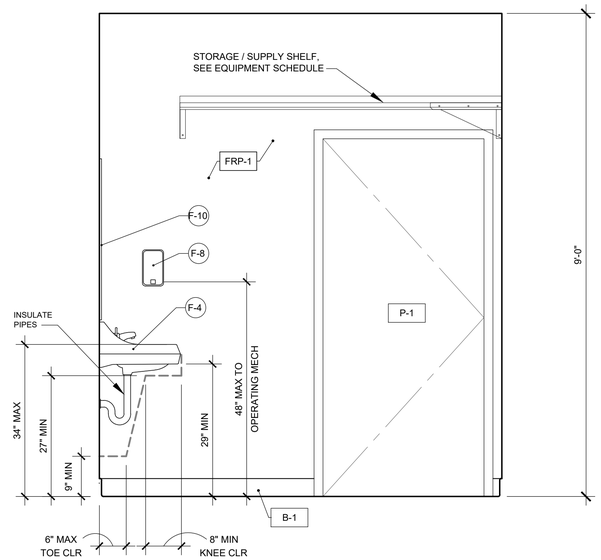

5 RESTROOM ELEVATION
SCALE: 3/4" = 1'-0"

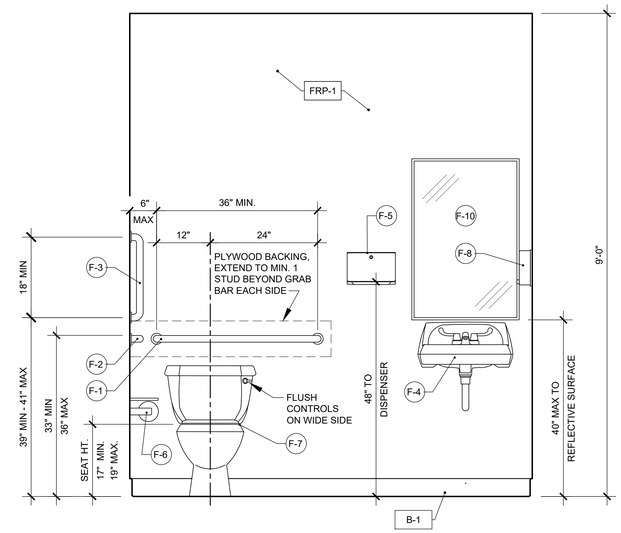

4 RESTROOM ELEVATION
SCALE: 3/4" = 1'-0"

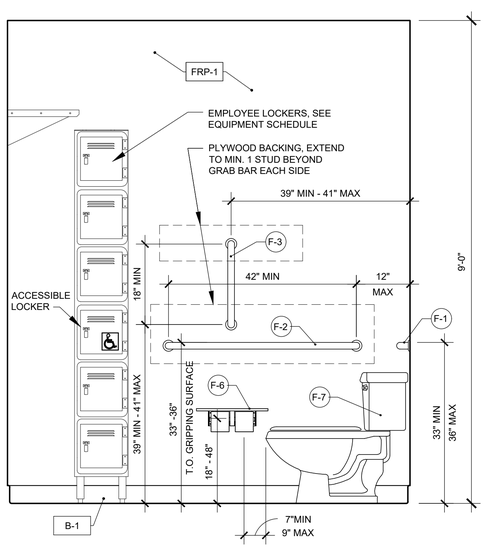

3 RESTROOM ELEVATION
SCALE: 3/4" = 1'-0"

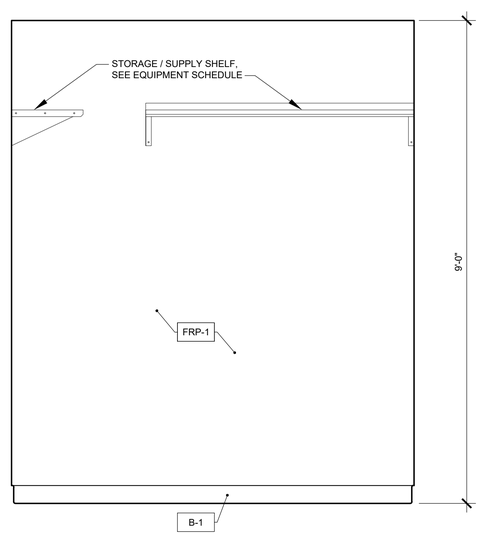

2 RESTROOM ELEVATION
SCALE: 3/4" = 1'-0"

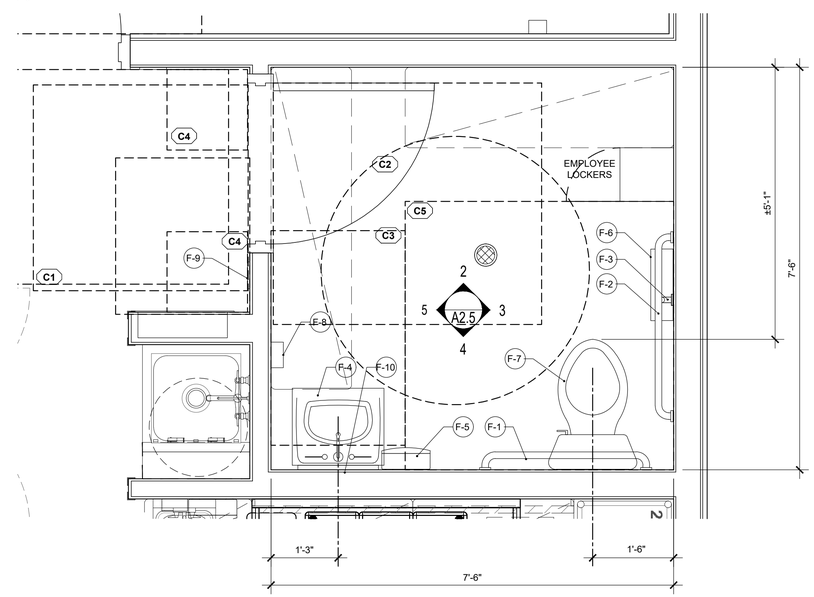

1 ENLARGED RESTROOM PLAN
SCALE: 3/4" = 1'-0"

GHA
Architecture / Development
14901 Quorum Drive
Suite 300
Dallas Texas 75254
Ph: (972) 239-8884
Fax: (972) 239-5054

STATE OF MICHIGAN KEVIN HENDERSON ARCHITECT No. 6501054109 LICENSED ARCHITECT
12/21/2021

EST. 1998 SCOOTER'S COFFEE

PROJECT ADDRESS:
1490 WEST ANN ARBOR ROAD
PLYMOUTH, MI 48170

REVISIONS:

TITLE:
ENLARGED RESTROOM PLAN AND ELEVATIONS

DATE:
12/21/2021

PROJECT NO.
210536

- [ ] DESIGN DEVELOPMENT
- [x] PERMIT SUBMITTAL
- [x] BID PACKAGE
- [ ] CONSTRUCTION ISSUE

SHEET NO.
A2.5

THIS DRAWING AND ITS CONTENTS ARE THE COPYRIGHTED PROPERTY OF GHA ARCHITECTS USE THEREOF IS LIMITED TO THE SPECIFIC PROJECT AND SITE SET FORTH ABOVE, AND MAY NOT BE OTHERWISE USED OR REPRODUCED, IN WHOLE OR IN PART, WITHOUT THE WRITTEN PERMISSION OF GHA ARCHITECTS, THE ARCHITECT. THIS DRAWING IS TO BE RETURNED UPON REQUEST.

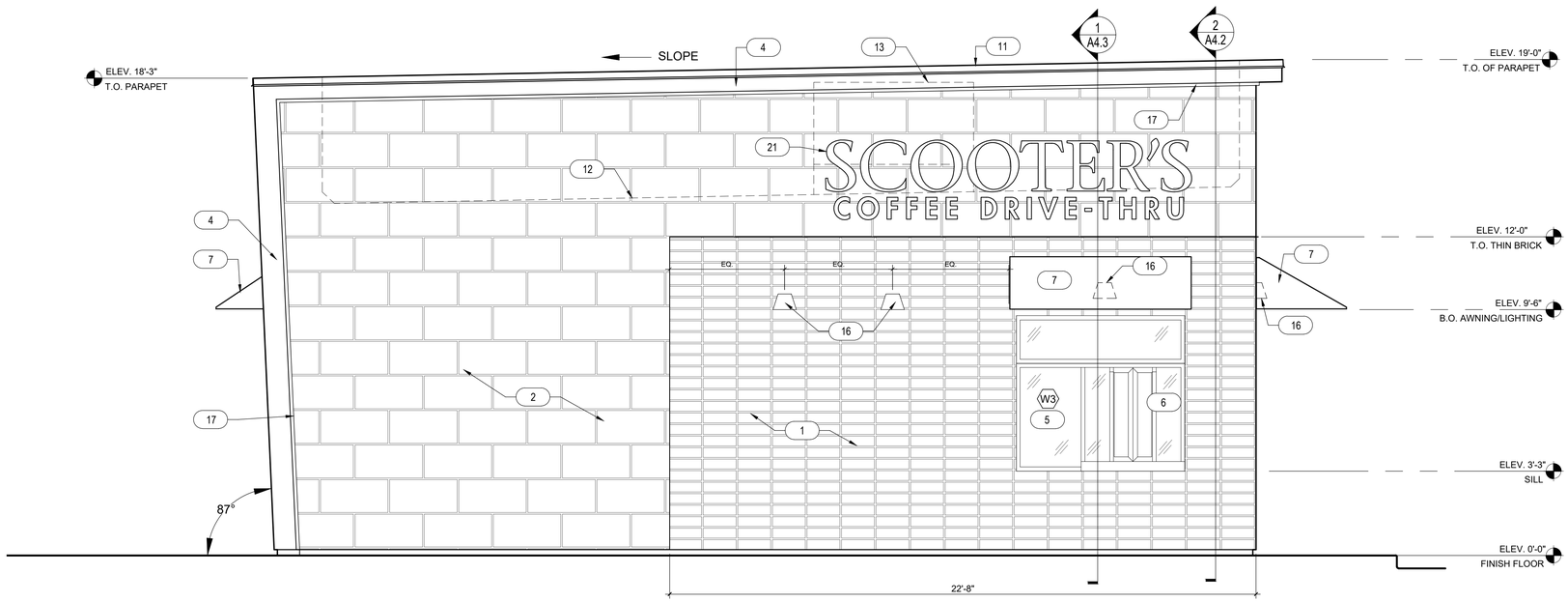

2 EXTERIOR ELEVATIONS

SCALE: 3/8" = 1'-0"

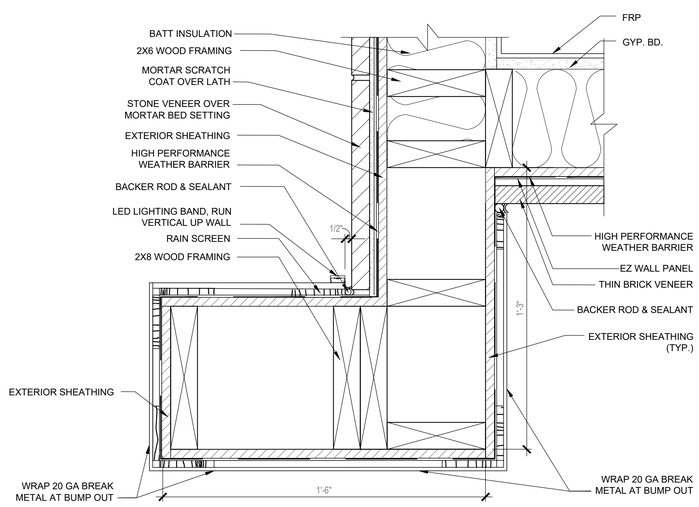

3 BREAK METAL TO THIN BRICK TRANSITION

SCALE: 3" = 1'-0"

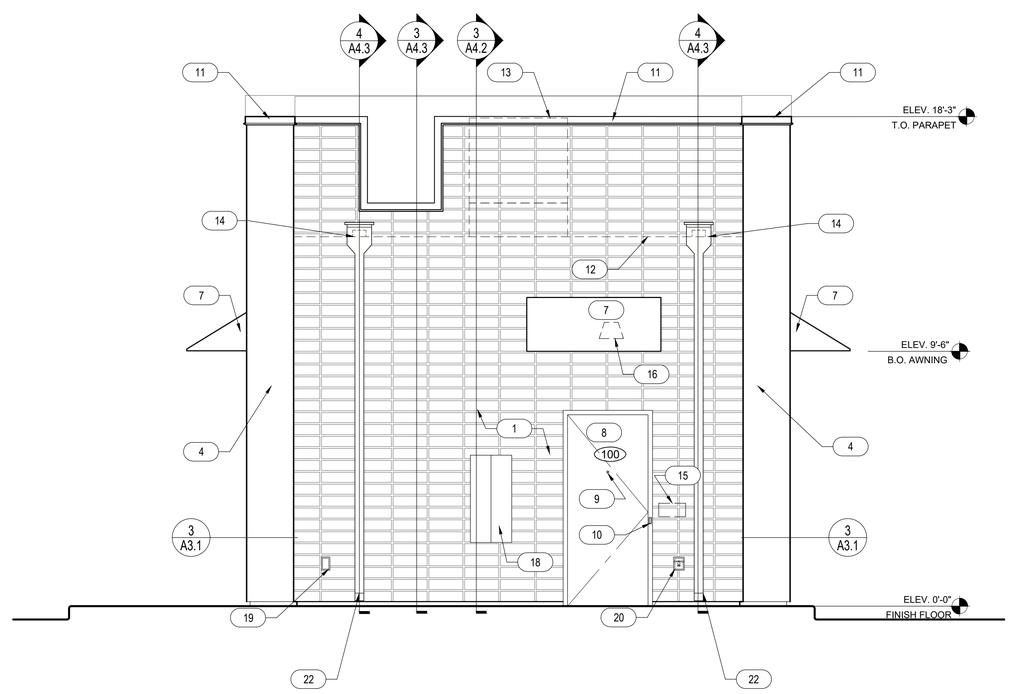

1 EXTERIOR ELEVATIONS

SCALE: 3/8" = 1'-0"

KEYNOTES

X

1. GLEB-GERY THIN BRICK VENEER, STACKED BOND - COLOR: ROSEWOOD, PAPERCUT
2. EL DORADO STONE MARQUEE24 - COLOR: DOVE TAIL
3. NOT USED
4. 20 GUAGE METAL ACCENTS AND SOFFITS - COLOR: DARK BRONZE
5. INSULATED DARK BRONZE ALUMINUM WINDOWS WITH DUAL PANE TEMPERED GLASS
6. QUICKSERVE 48X48 WINDOW - COLOR: DARK BRONZE
7. AWNING BY OTHERS - COLOR: RED
8. INSULATED HOLLOW METAL DOOR AND FRAME COLOR: SHERWIN WILLIAMS SW6356 COPPER MOUNTAIN EGGSHELL FINISH
9. PEEP HOLE, BY DOOR MANUFACTURER
10. DOOR BELL
11. 20 GUAGE METAL PARAPET CAP
12. LINE OF ROOF BEYOND
13. ROOF TOP UNIT BEYOND, SEE MECHANICAL DRAWINGS
14. ROOF SCUPPER AND DOWNSPOUT, SEE DETAIL 8/A6.3
15. MAILBOX BY OWNER
16. WALL MOUNTED LIGHT FIXTURE, SEE ELECTRICAL DRAWINGS
17. LED LIGHT BAND, SEE ELECTRICAL DRAWINGS
18. SES PANEL, SEE ELECTRICAL DRAWINGS
19. ELECTRICAL OUTLETS, SEE ELECTRICAL DRAWINGS
20. HOSE BIBB, SEE PLUMBING DRAWINGS
21. SIGNAGE BY OTHERS, UNDER A SEPARATE PERMIT
22. CONNECT DOWNSPOUTS TO UNDERGROUND PIPING, REF. CIVIL.
23. SPANDREL GLASS
24. SERVICE COUNTER BY BI-PARTING WINDOW MANUFACTURER
25. SECONDARY SIGNAGE BY OTHERS, PENDING PLANNING COMMISSION APPROVAL

GHA
Architecture / Development
14901 Quorum Drive
Suite 300
Dallas Texas 75254
Ph: (972) 239-8884
Fax: (972) 239-5054

STATE OF MICHIGAN
KEVIN HENDERSON
ARCHITECT
No. 1301058109
LICENSED ARCHITECT
12/21/2021

EST. 1998
SCOOTER'S COFFEE

PROJECT ADDRESS:
1490 WEST ANN ARBOR ROAD
PLYMOUTH, MI 48170

REVISIONS:

TITLE:
EXTERIOR ELEVATIONS

DATE:
12/21/2021

PROJECT NO.
210536

- ☐ DESIGN DEVELOPMENT
- ☒ PERMIT SUBMITTAL
- ☒ BID PACKAGE
- ☐ CONSTRUCTION ISSUE

SHEET NO.
A3.1

THIS DRAWING AND ITS CONTENTS ARE THE COPYRIGHTED PROPERTY OF GHA ARCHITECTS USE THEREOF IS LIMITED TO THE SPECIFIC PROJECT AND SITE SET FORTH ABOVE, AND MAY NOT BE OTHERWISE USED OR REPRODUCED, IN WHOLE OR IN PART, WITHOUT THE WRITTEN PERMISSION OF GHA ARCHITECTS. THE ARCHITECT. THIS DRAWING IS TO BE RETURNED UPON REQUEST.

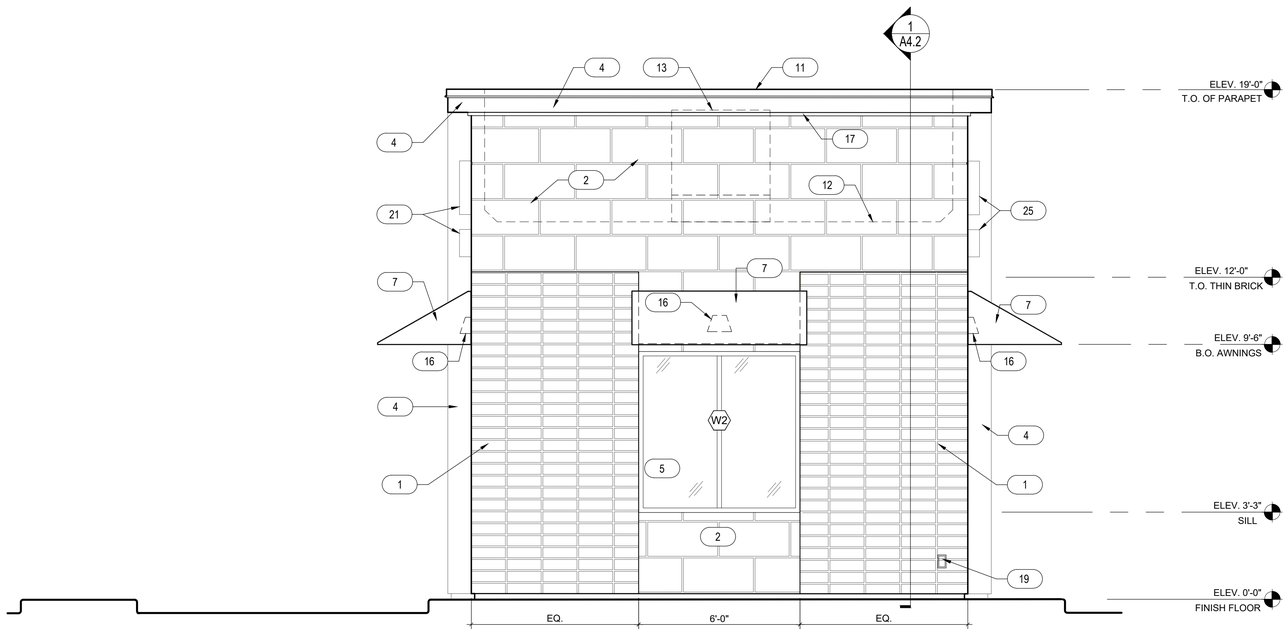

2 EXTERIOR ELEVATIONS

SCALE: 3/8" = 1'-0"

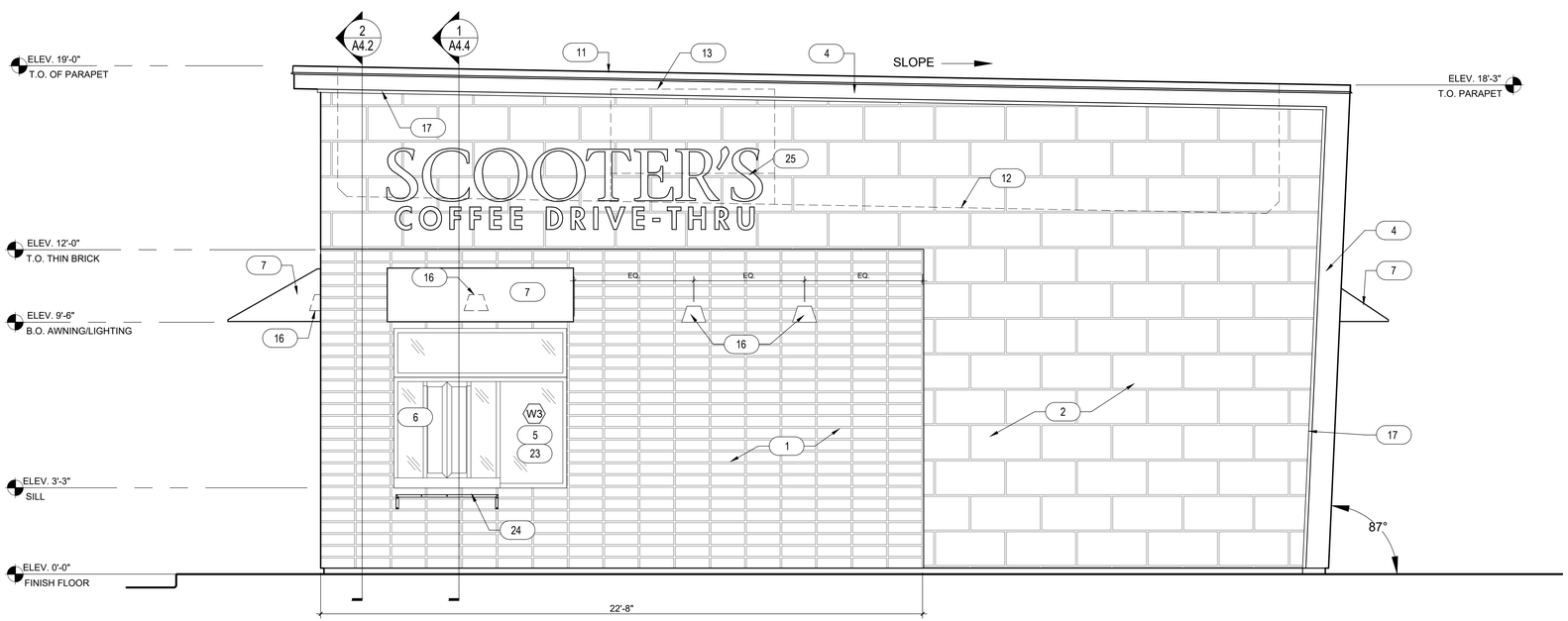

1 EXTERIOR ELEVATIONS

SCALE: 3/8" = 1'-0"

KEYNOTES

X

1. GLEB-GERY THIN BRICK VENEER, STACKED BOND - COLOR: ROSEWOOD, PAPERCUT
2. EL DORADO STONE MARQUEE24 - COLOR: DOVE TAIL
3. NOT USED
4. 20 GUAGE METAL ACCENTS AND SOFFITS - COLOR: DARK BRONZE
5. INSULATED DARK BRONZE ALUMINUM WINDOWS WITH DUAL PANE TEMPERED GLASS
6. QUICKSERVE 48X48 WINDOW - COLOR: DARK BRONZE
7. AWNING BY OTHERS - COLOR: RED
8. INSULATED HOLLOW METAL DOOR AND FRAME COLOR: SHERWIN WILLIAMS SW6356 COPPER MOUNTAIN EGGSHELL FINISH
9. PEEP HOLE, BY DOOR MANUFACTURER
10. DOOR BELL
11. 20 GUAGE METAL PARAPET CAP
12. LINE OF ROOF BEYOND
13. ROOF TOP UNIT BEYOND, SEE MECHANICAL DRAWINGS
14. ROOF SCUPPER AND DOWNSPOUT, SEE DETAIL 8/A6.3
15. MAILBOX BY OWNER
16. WALL MOUNTED LIGHT FIXTURE, SEE ELECTRICAL DRAWINGS
17. LED LIGHT BAND, SEE ELECTRICAL DRAWINGS
18. SES PANEL, SEE ELECTRICAL DRAWINGS
19. ELECTRICAL OUTLETS, SEE ELECTRICAL DRAWINGS
20. HOSE BIBB, SEE PLUMBING DRAWINGS
21. SIGNAGE BY OTHERS, UNDER A SEPARATE PERMIT
22. CONNECT DOWNSPOUTS TO UNDERGROUND PIPING, REF. CIVIL.
23. SPANDREL GLASS
24. SERVICE COUNTER BY BI-PARTING WINDOW MANUFACTURER
25. SECONDARY SIGNAGE BY OTHERS, PENDING PLANNING COMMISSION APPROVAL

GHA
Architecture / Development
14901 Quorum Drive
Suite 300
Dallas Texas 75254
Ph: (972) 239-8884
Fax: (972) 239-5054

STATE OF MICHIGAN
KEVIN J. HENDERSON
ARCHITECT
No. 1301058109
LICENSED ARCHITECT
12/21/2021

EST. 1998
SCOOTER'S COFFEE

PROJECT ADDRESS:
1490 WEST ANN ARBOR ROAD
PLYMOUTH, MI 48170

REVISIONS:

TITLE:
EXTERIOR ELEVATIONS

DATE:
12/21/2021

PROJECT NO.
210536

- [ ] DESIGN DEVELOPMENT
- [x] PERMIT SUBMITTAL
- [x] BID PACKAGE
- [ ] CONSTRUCTION ISSUE

SHEET NO.

A3.2

THIS DRAWING AND ITS CONTENTS ARE THE COPYRIGHTED PROPERTY OF GHA ARCHITECTS. USE THEREOF IS LIMITED TO THE SPECIFIC PROJECT AND SITE SET FORTH ABOVE, AND MAY NOT BE OTHERWISE USED OR REPRODUCED, IN WHOLE OR IN PART, WITHOUT THE WRITTEN PERMISSION OF GHA ARCHITECTS. THE ARCHITECT. THIS DRAWING IS TO BE RETURNED UPON REQUEST.

GENERAL NOTES

A. REFER TO SHEET A2.2 FOR FINISH DESIGNATION.
B. REFER TO SHEET K1.0 FOR EQUIPMENT CALLOUT INFORMATION.

KEY NOTES

#

1. NEW STOREFRONT WINDOWS, SEE WINDOW SCHEDULE ON A5.1
2. NEW DRIVE-THRU WINDOW, SEE WINDOW SCHEDULE ON A5.1
3. FLOOR SINKS, SEE PLUMBING DRAWINGS
4. 24" x 24" DATA RACK, SEE ELECTRICAL DRAWINGS
5. MOP SINK, SEE PLUMBING DRAWINGS
6. HOT WATER HEATER ON PLATFORM, SEE PLUMBING AND ELECTRICAL DRAWINGS
7. SPANDREL GLASS BEHIND REACH REACH-IN FRIDGE.

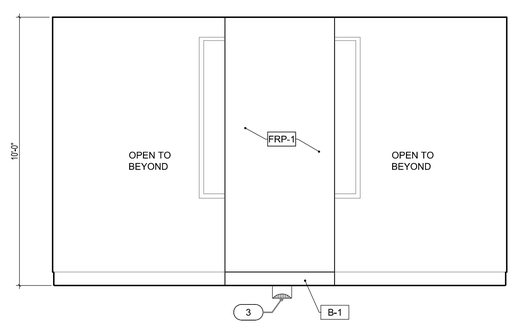

6 INTERIOR ELEVATION
SCALE: 3/8" = 1'-0"

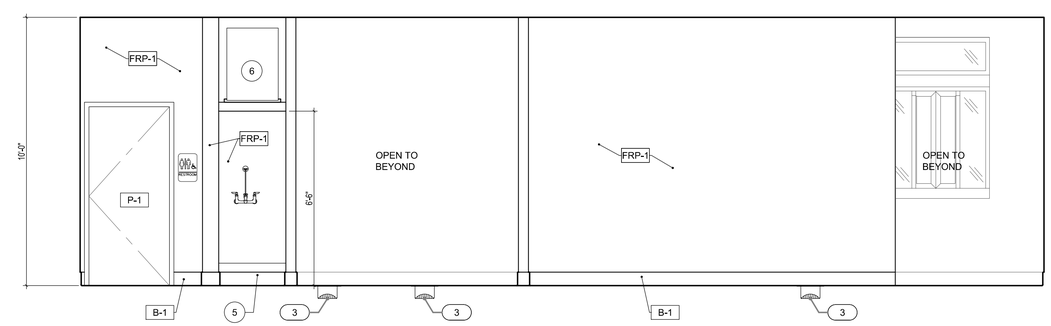

3 INTERIOR ELEVATION
SCALE: 3/8" = 1'-0"

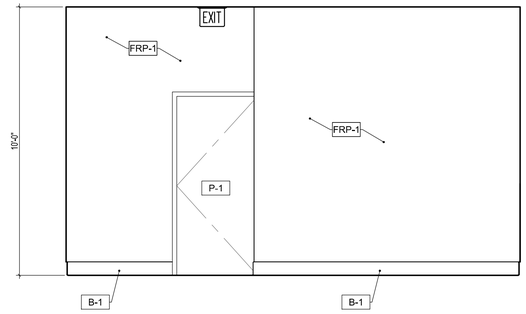

5 INTERIOR ELEVATION
SCALE: 3/8" = 1'-0"

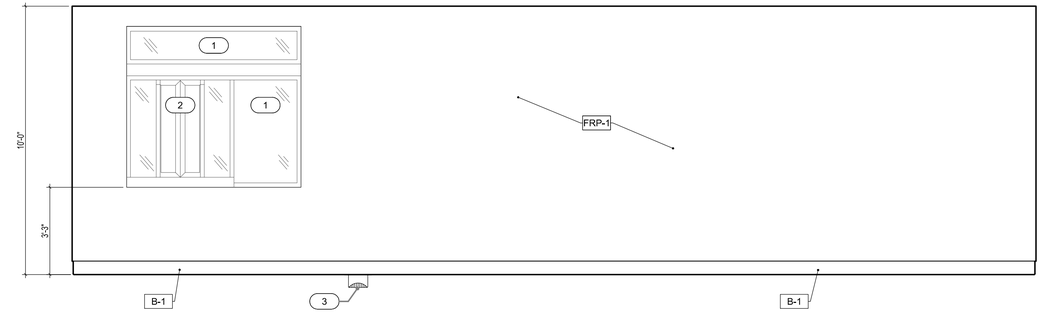

2 INTERIOR ELEVATION
SCALE: 3/8" = 1'-0"

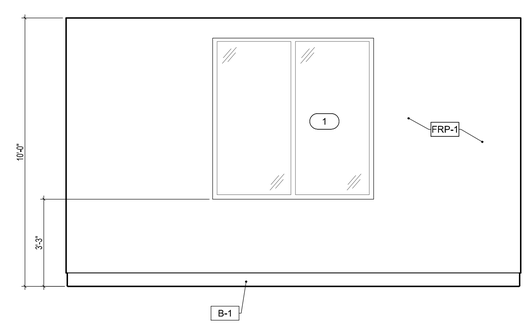

4 INTERIOR ELEVATION
SCALE: 3/8" = 1'-0"

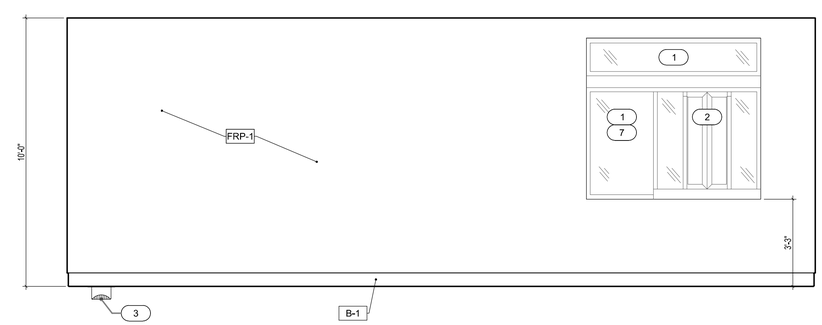

1 INTERIOR ELEVATION
SCALE: 3/8" = 1'-0"

GHA
Architecture / Development
14901 Quorum Drive
Suite 300
Dallas Texas 75254
Ph: (972) 239-8884
Fax: (972) 239-5054

STATE OF MICHIGAN
KEVIN HENDERSON
ARCHITECT
No. 4001058109
LICENSED ARCHITECT
12/21/2021

EST. 1998
SCOOTER'S COFFEE

PROJECT ADDRESS:
1490 WEST ANN ARBOR ROAD
PLYMOUTH, MI 48170

REVISIONS:

TITLE:
INTERIOR ELEVATIONS

DATE:
12/21/2021

PROJECT NO.
210536

- [ ] DESIGN DEVELOPMENT
- [x] PERMIT SUBMITTAL
- [x] BID PACKAGE
- [ ] CONSTRUCTION ISSUE

SHEET NO.
A3.3

THIS DRAWING AND ITS CONTENTS ARE THE COPYRIGHTED PROPERTY OF GHA ARCHITECTS. USE THEREOF IS LIMITED TO THE SPECIFIC PROJECT AND SITE SET FORTH ABOVE, AND MAY NOT BE OTHERWISE USED OR REPRODUCED, IN WHOLE OR IN PART, WITHOUT THE WRITTEN PERMISSION OF GHA ARCHITECTS, THE ARCHITECT. THIS DRAWING IS TO BE RETURNED UPON REQUEST.

GENERAL NOTES

A. REFER TO SHEET A2.2 FOR FINISH DESIGNATION

B. REFER TO SHEET K1.0 FOR EQUIPMENT INFORMATION

C. REFER TO SHEET G0.4 FOR BUILDING ENVELOPE REQUIREMENTS; BUILDING ENVELOPE MINIMUMS MUST BE MET

GHA

Architecture / Development
14901 Quorum Drive
Suite 300
Dallas Texas 75254
Ph: (972) 239-8884
Fax: (972) 239-5054

STATE OF MICHIGAN
KEVIN HENDERSON
ARCHITECT
No. 6501054109
LICENSED ARCHITECT

12/21/2021

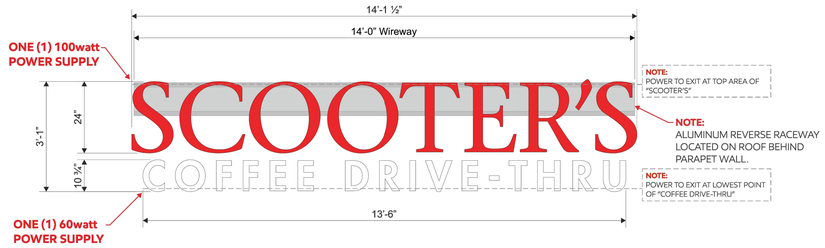

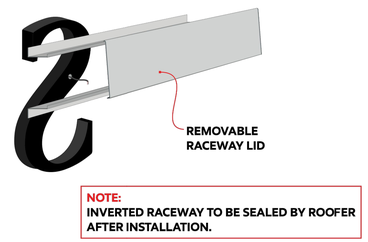

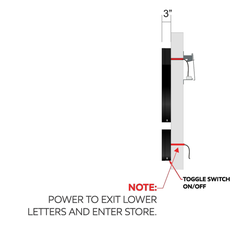

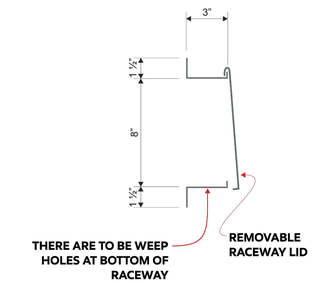

3 INVERTED RACEWAY DETAIL

SCALE: NTS

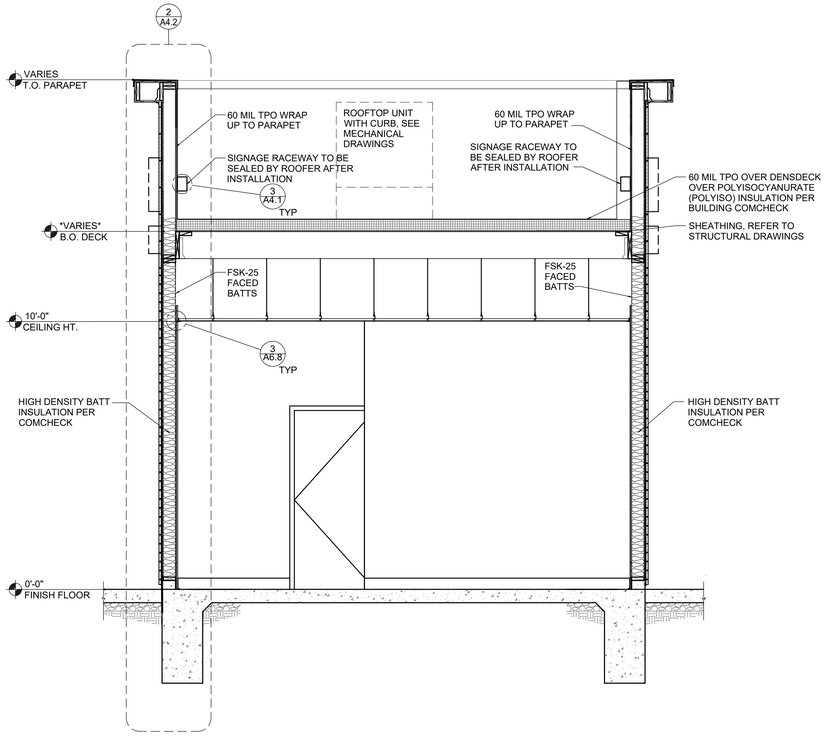

2 BUILDING SECTION

SCALE: 3/8" = 1'-0"

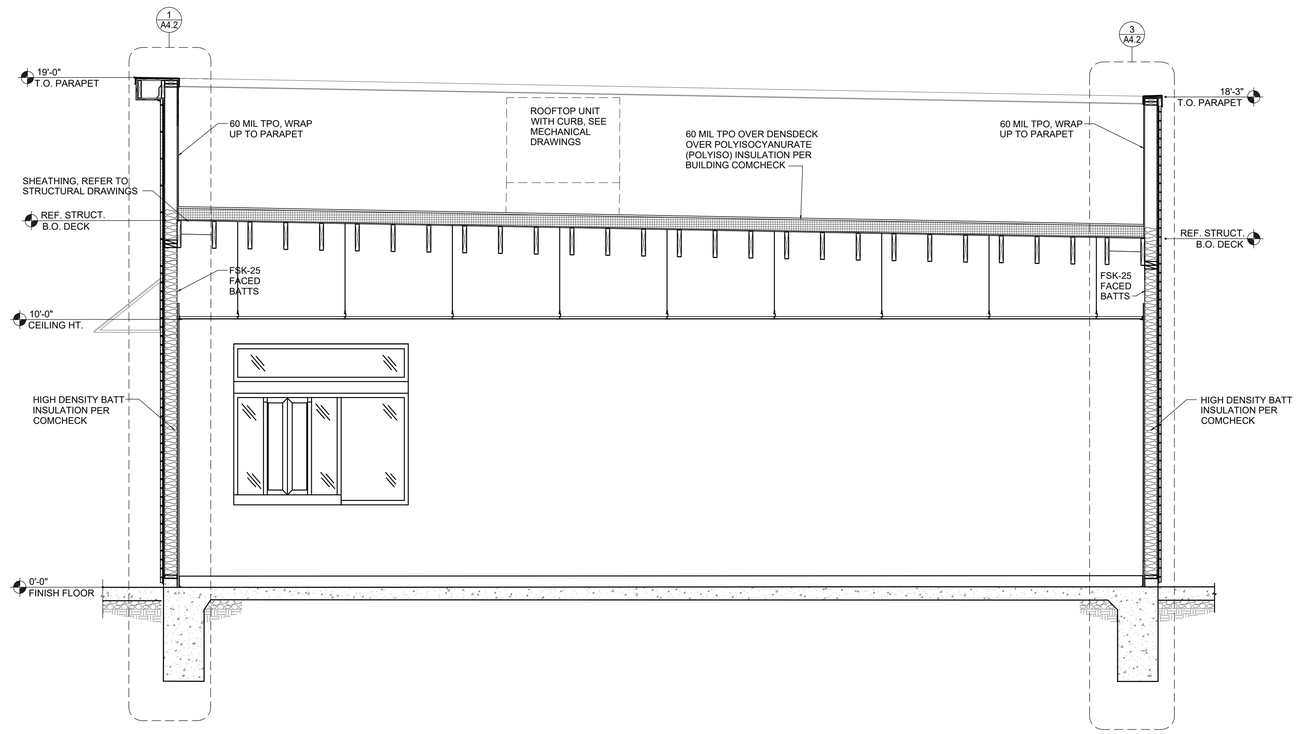

1 BUILDING SECTION

SCALE: 3/8" = 1'-0"

EST. 1998 SCOOTER'S COFFEE

PROJECT ADDRESS:
1490 WEST ANN ARBOR ROAD
PLYMOUTH, MI 48170

REVISIONS:

TITLE:
BUILDING SECTIONS

DATE:
12/21/2021

PROJECT NO.
210536

- [ ] DESIGN DEVELOPMENT
- [x] PERMIT SUBMITTAL
- [x] BID PACKAGE
- [ ] CONSTRUCTION ISSUE

SHEET NO.

A4.1

THIS DRAWING AND ITS CONTENTS ARE THE COPYRIGHTED PROPERTY OF GHA ARCHITECTS USE THEREOF IS LIMITED TO THE SPECIFIC PROJECT AND SITE SET FORTH ABOVE, AND MAY NOT BE OTHERWISE USED OR REPRODUCED, IN WHOLE OR IN PART, WITHOUT THE WRITTEN PERMISSION OF GHA ARCHITECTS, THE ARCHITECT. THIS DRAWING IS TO BE RETURNED UPON REQUEST.

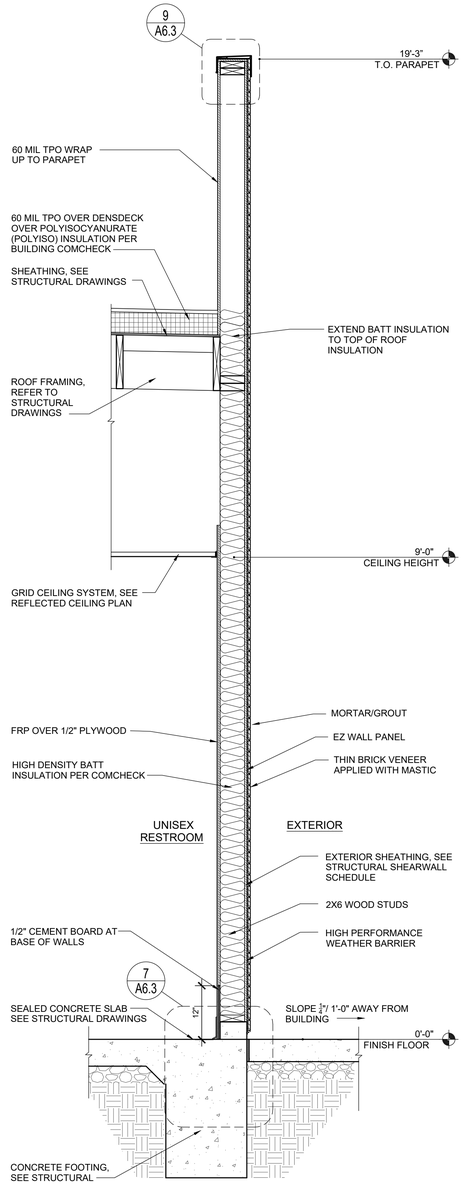

3 WALL SECTION
SCALE: 3/4" = 1'-0"

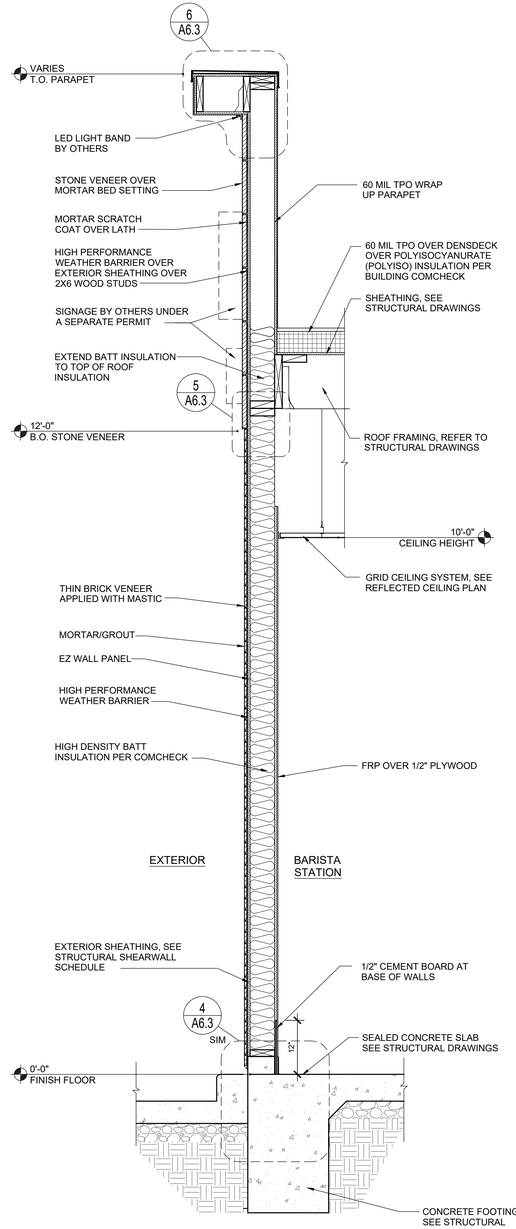

2 WALL SECTION
SCALE: 3/4" = 1'-0"

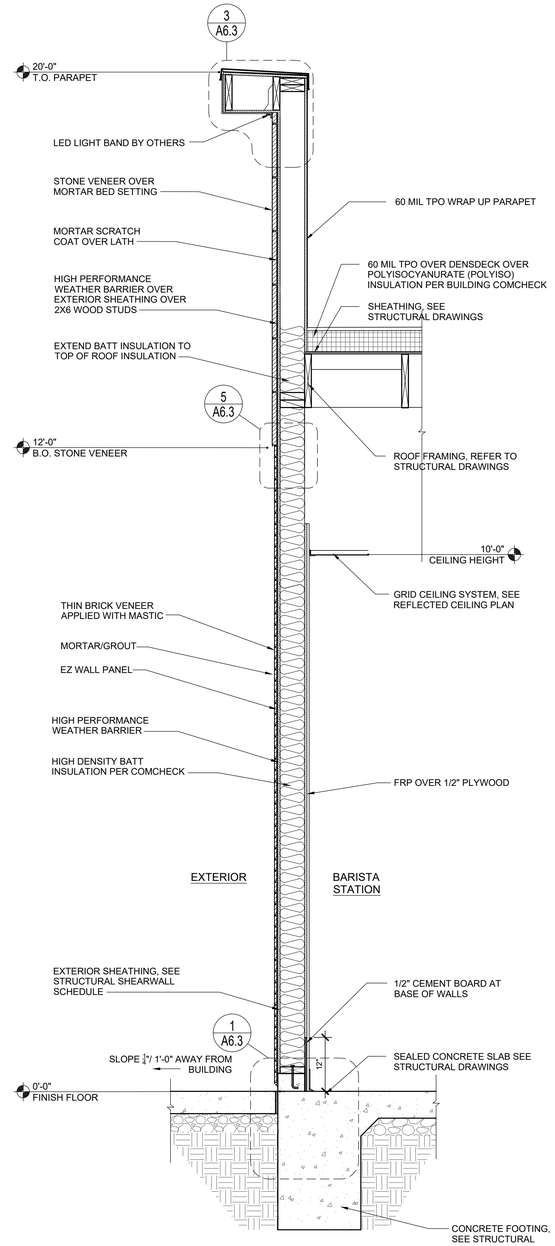

1 WALL SECTION
SCALE: 3/4" = 1'-0"

THIS DRAWING AND ITS CONTENTS ARE THE COPYRIGHTED PROPERTY OF GHA ARCHITECTS USE THEREOF IS LIMITED TO THE SPECIFIC PROJECT AND SITE SET FORTH ABOVE, AND MAY NOT BE OTHERWISE USED OR REPRODUCED, IN WHOLE OR IN PART, WITHOUT THE WRITTEN PERMISSION OF GHA ARCHITECTS. THE ARCHITECT. THIS DRAWING IS TO BE RETURNED UPON REQUEST.

GHA
Architecture / Development
14901 Quorum Drive
Suite 300
Dallas Texas 75254
Ph: (972) 239-8884
Fax: (972) 239-5054

STATE OF MICHIGAN
KEVIN HENDERSON
ARCHITECT
No. 1301058109
LICENSED ARCHITECT
12/21/2021

EST. 1998
SCOOTER'S COFFEE

PROJECT ADDRESS:
1490 WEST ANN
ARBOR ROAD
PLYMOUTH, MI 48170

REVISIONS:

TITLE:
WALL SECTIONS

DATE:
12/21/2021

PROJECT NO.
210536

- [ ] DESIGN DEVELOPMENT
- [x] PERMIT SUBMITTAL
- [x] BID PACKAGE
- [ ] CONSTRUCTION ISSUE

SHEET NO.
A4.2

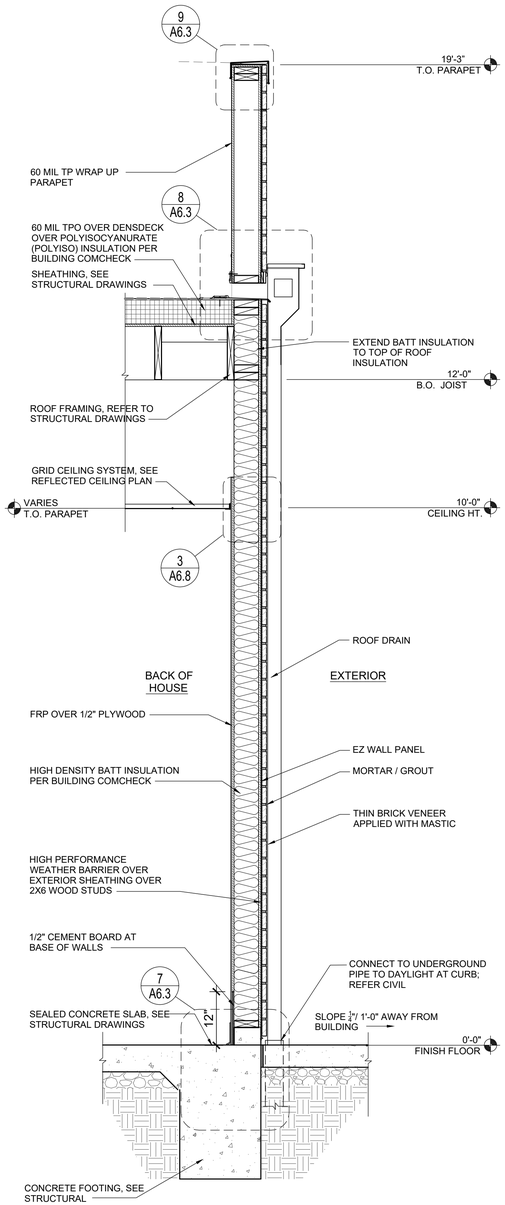

4 WALL SECTION
SCALE: 3/4" = 1'-0"

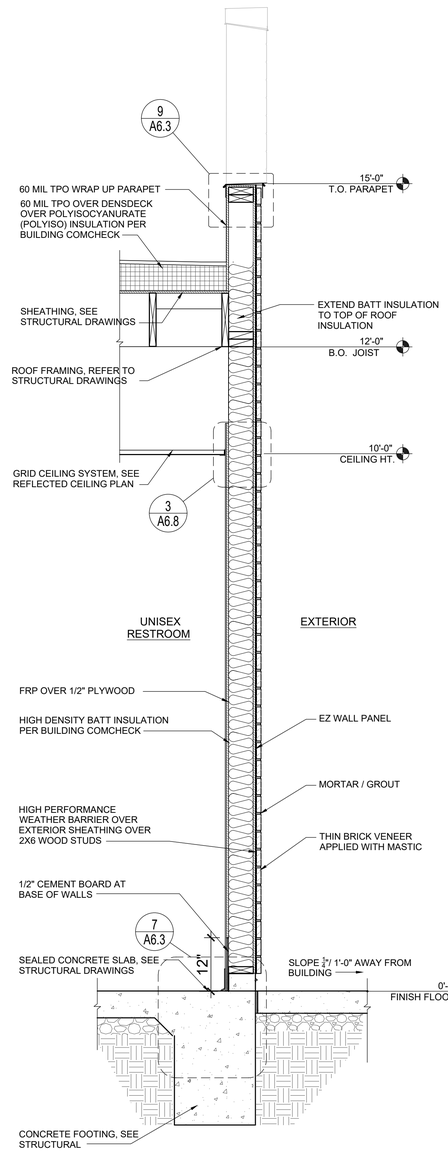

3 WALL SECTION
SCALE: 3/4" = 1'-0"

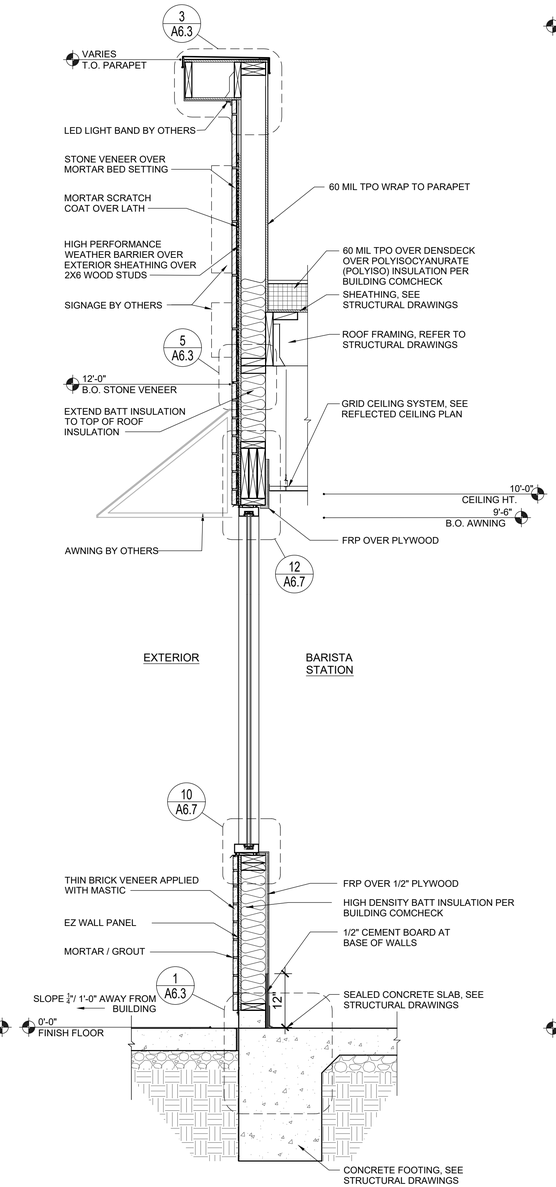

2 WALL SECTION
SCALE: 3/4" = 1'-0"

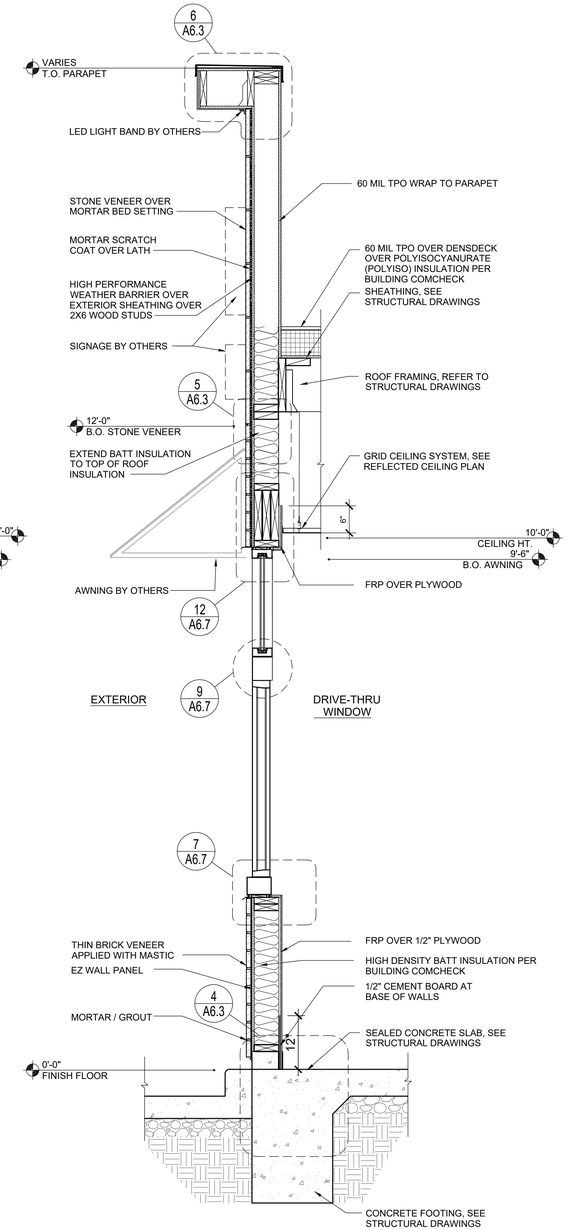

1 WALL SECTION
SCALE: 3/4" = 1'-0"

THIS DRAWING AND ITS CONTENTS ARE THE COPYRIGHTED PROPERTY OF GHA ARCHITECTS USE THEREOF IS LIMITED TO THE SPECIFIC PROJECT AND SITE SET FORTH ABOVE, AND MAY NOT BE OTHERWISE USED OR REPRODUCED, IN WHOLE OR IN PART, WITHOUT THE WRITTEN PERMISSION OF GHA ARCHITECTS. THE ARCHITECT. THIS DRAWING IS TO BE RETURNED UPON REQUEST.

GHA
Architecture / Development
14901 Quorum Drive
Suite 300
Dallas Texas 75254
Ph: (972) 239-8884
Fax: (972) 239-5054

STATE OF MICHIGAN
KEVIN J. HENDERSON
ARCHITECT
No. 1301054109
LICENSED ARCHITECT
12/21/2021

EST. 1998
SCOOTER'S COFFEE

PROJECT ADDRESS:
1490 WEST ANN
ARBOR ROAD
PLYMOUTH, MI 48170

REVISIONS:

TITLE:
WALL SECTIONS

DATE:
12/21/2021

PROJECT NO.
210536

- [ ] DESIGN DEVELOPMENT
- [x] PERMIT SUBMITTAL
- [x] BID PACKAGE
- [ ] CONSTRUCTION ISSUE

SHEET NO.
A4.3

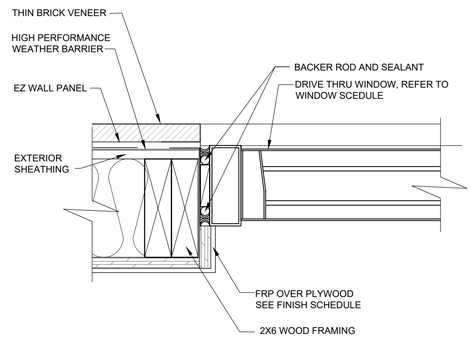

3 DETAIL AT JAMB DRIVE-THRU

SCALE: 3" = 1'-0" G.C. VERIFY DETAIL PER MANUFACTURES INSTRUCTIONS

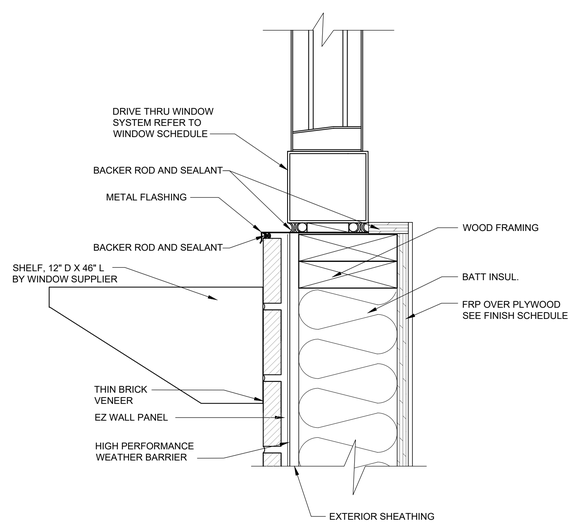

2 DETAIL AT SILL WALK UP WINDOW

SCALE: 3" = 1'-0" G.C. VERIFY DETAIL PER MANUFACTURES INSTRUCTIONS

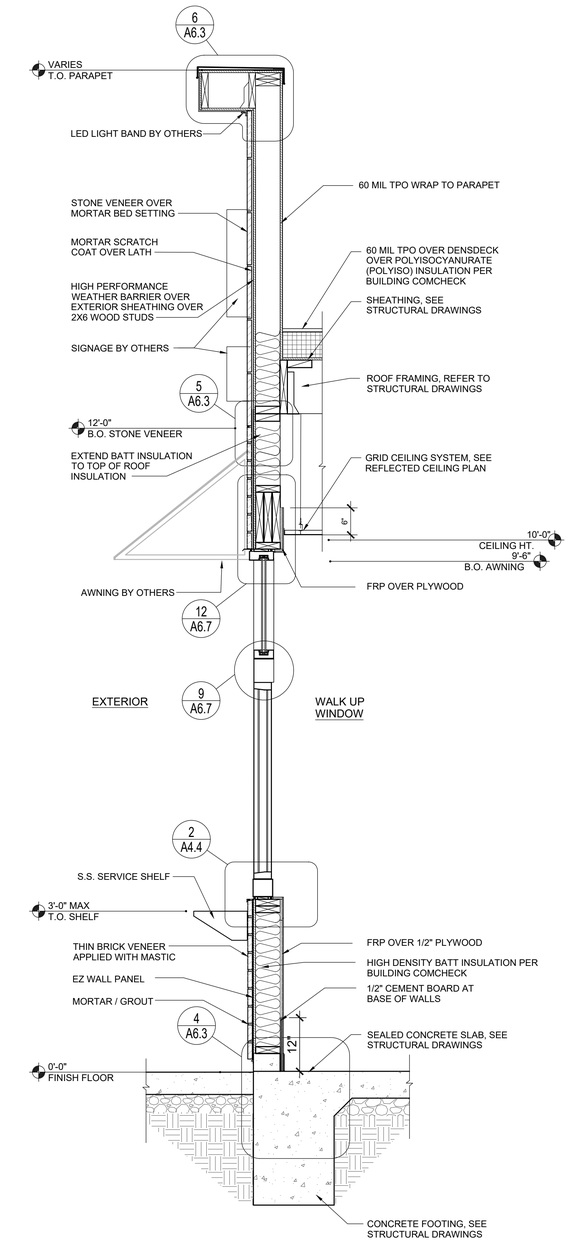

1 WALL SECTION

SCALE: 3/4" = 1'-0"

GHA
Architecture / Development
14901 Quorum Drive
Suite 300
Dallas Texas 75254
Ph: (972) 239-8884
Fax: (972) 239-5054

STATE OF MICHIGAN KENNETH HENDERSON ARCHITECT No. 4001054019 LICENSED ARCHITECT

12/21/2021

EST. 1998 SCOOTER'S COFFEE

PROJECT ADDRESS:
1490 WEST ANN ARBOR ROAD
PLYMOUTH, MI 48170

REVISIONS:

TITLE:
WALK-UP WINDOW DETAILS

DATE:
12/21/2021

PROJECT NO.
210536

- [ ] DESIGN DEVELOPMENT
- [x] PERMIT SUBMITTAL
- [x] BID PACKAGE
- [ ] CONSTRUCTION ISSUE

SHEET NO.

A4.4

THIS DRAWING AND ITS CONTENTS ARE THE COPYRIGHTED PROPERTY OF GHA ARCHITECTS. USE THEREOF IS LIMITED TO THE SPECIFIC PROJECT AND SITE SET FORTH ABOVE, AND MAY NOT BE OTHERWISE USED OR REPRODUCED, IN WHOLE OR IN PART, WITHOUT THE WRITTEN PERMISSION OF GHA ARCHITECTS. THE ARCHITECT. THIS DRAWING IS TO BE RETURNED UPON REQUEST.

THIS DRAWING AND ITS CONTENTS ARE THE COPYRIGHTED PROPERTY OF GHA ARCHITECTS. USE THEREOF IS LIMITED TO THE SPECIFIC PROJECT AND SITE SET FORTH ABOVE, AND MAY NOT BE OTHERWISE USED OR REPRODUCED, IN WHOLE OR IN PART, WITHOUT THE WRITTEN PERMISSION OF GHA ARCHITECTS. THE ARCHITECT. THIS DRAWING IS TO BE RETURNED UPON REQUEST.

WINDOW TYPES	W1	W2	W3
	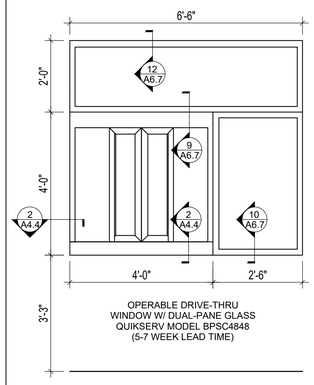 OPERABLE DRIVE-THRU WINDOW W/ DUAL-PANE GLASS QUIKSERV MODEL BPSC4848 (5-7 WEEK LEAD TIME)	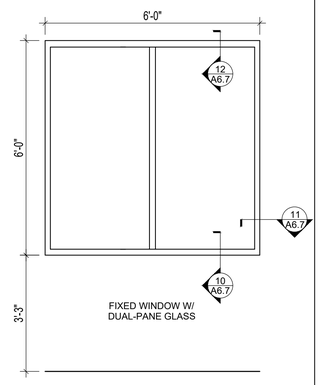 FIXED WINDOW W/ DUAL-PANE GLASS	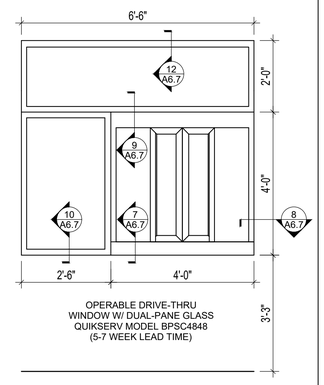 OPERABLE DRIVE-THRU WINDOW W/ DUAL-PANE GLASS QUIKSERV MODEL BPSC4848 (5-7 WEEK LEAD TIME)
MATERIAL / FINISH	DARK BRONZE	AL / DARK BRONZE	DARK BRONZE
GLASS	1" INSULATED DUAL PANE TEMPERED CLEAR GLASS	1" INSULATED DUAL PANE TEMPERED CLEAR GLASS	1" INSULATED DUAL PANE TEMPERED CLEAR GLASS
R.O. DIMENSIONS	6'-6" W X 6'-0" H	6'-0" W X 6'-0" H	6'-6" W X 6'-0" H
NOTES	CONTRACTOR TO INSTALL 35% WINDOW TINT FILM ON 2ND SURFACE (INSIDE)	CONTRACTOR TO INSTALL 35% WINDOW TINT FILM ON 2ND SURFACE (INSIDE)	CONTRACTOR TO INSTALL 35% WINDOW TINT FILM ON 2ND SURFACE (INSIDE)

Integral Flanged window aFter water-resistive barrier (wrb) is Installed

Method applies to following products:
- DuPont™ StraightFlash™
- DuPont™ FlexWrap™

SteP 1
Prepare WRB for window installation:

A. Make an "I-Cut" (Standard I-Cut) in the WRB (modified I-Cut is also accepted). For an "I-Cut", begin with a horizontal cut across the bottom and the top of the window frame (for round top windows, the cut should begin above the mull joint). From the center, cut straight down to the sill.

B. Cut two 45 degree slits a minimum of 8" from the corner of the header to create a flap above the rough opening to expose sheathing or framing members to allow head flashing installation (see step 4). Flip head flap up (B) and temporarily secure with DuPont™Tyvek®Tape. Some windows and flashing widths may require longer slits.

C. Fold side flaps into rough opening, cut excess flaps, and secure.

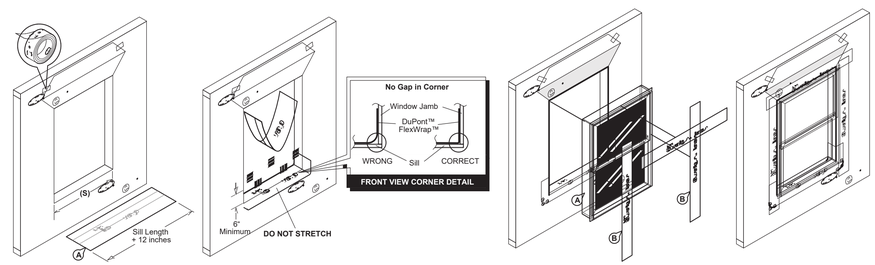

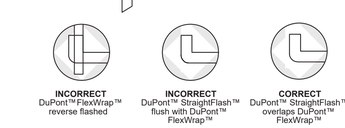

SteP 5
A. Flip down upper flap of WRB so it lays flat across head flashing.

B. Tape down diagonal seams of WRB.

C. Tape seams as shown. do noT TAPE at bottom of window. At the head, continuous tape seams as shown with DuPont™Tyvek®Tape; if an air barrier is not required or if additional drainage is desired, then skip-tape at the head.

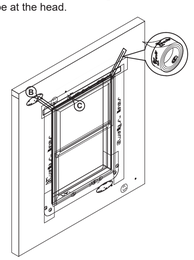

SteP 6
Final Step

A. Tool sealant around the window opening at the interior, using DuPont™Weatherization Sealant or DuPont Recommended Low Expansion Foam (and backer rod as necessary). Sealant and backer rod will also serve as a back dam.

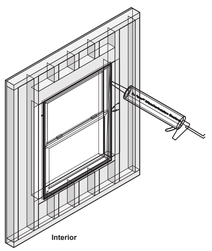

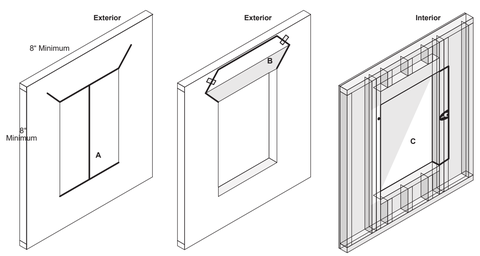

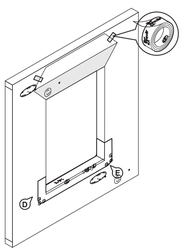

1 FLASHING DETAILS
SCALE: NTS

GHA
Architecture / Development
14901 Quorum Drive
Suite 300
Dallas Texas 75254
Ph: (972) 239-8884
Fax: (972) 239-5054

STATE OF MICHIGAN
KEVIN HENDERSON
ARCHITECT
No. 4001054019
LICENSED ARCHITECT
12/21/2021

EST. 1998 SCOOTER'S COFFEE

SCOOTER'S COFFEE
QUIKSERV NATIONAL ACCOUNT

SALES
OFFICE: 713.849.5882
EMAIL: SALES@QUIKSERV.COM
11441 BRITTMOORE PARK DR
HOUSTON, TX 77041

SERVICE & WARRANTY
WADE ARNOLD - ACCOUNT MANAGER
OFFICE: 832.305.3300
EMAIL: WARNOLD@QUIKSERV.COM

BRIAN COBLE - WARRANTY
MIKE KEMP - PARTS
PAULO RODRIGUEZ - PARTS
EMAIL: SERVICE@QUIKSERV.COM
PHONE: 713.849.5882

PROJECT ADDRESS:
1490 WEST ANN ARBOR ROAD
PLYMOUTH, MI 48170

REVISIONS:

TITLE:
WINDOW SCHEDULE

DATE:
12/21/2021

PROJECT NO.
210536

- [ ] DESIGN DEVELOPMENT
- [x] PERMIT SUBMITTAL
- [x] BID PACKAGE
- [ ] CONSTRUCTION ISSUE

SHEET NO.
A5.1

THIS DRAWING AND ITS CONTENTS ARE THE COPYRIGHTED PROPERTY OF GHA ARCHITECTS USE THEREOF IS LIMITED TO THE SPECIFIC PROJECT AND SITE SET FORTH ABOVE, AND MAY NOT BE OTHERWISE USED OR REPRODUCED, IN WHOLE OR IN PART, WITHOUT THE WRITTEN PERMISSION OF GHA ARCHITECTS, THE ARCHITECT. THIS DRAWING IS TO BE RETURNED UPON REQUEST.

DOOR SCHEDULE

MARK	DOOR						FRAME			HARDWARE SET	REMARKS & DOOR NOTES
	TYPE	WIDTH	HEIGHT	THK	MATERIAL	FINISH	TYPE	MATERIAL	FINISH		
100	A	3'-0"	7'-0"	1-3/4"	INSULATED METAL U=0.70	PAINT	-	HM	PAINT	1	KEY PLATE INSIDE FACE
101	B	3'-0"	7'-0"	1-3/4"	HM	PAINT	-	HM	PAINT	2	KEY PLATE INSIDE FACE

HARDWARE SCHEDULE

SET NUMBER 1 - (ENTRY)

QTY.	PART	DESCRIPTION	MFGR.
1 1/2 PR.	BUTT HINGES	FULL MORTISE BB1279-450 4.5" x4.5", US26D/652, 5 KNUCKLE NON-REMOVABLE PIN	HAGER OR EQ.
1	CLOSER	LCN 1450 SURFACE MOUNTED, PULL SIDE, ALUM. FINISH (689)	LCN - EQ.
1	THRESHOLD	LOW PROFILE 2008_PK	PEMKO - EQ.
1	DOOR SWEEP	36" 225_V DOOR BOTTOM SWEEP	PEMKO - EQ.
1	WEATHER STRIP	AT PERIMETER OF DOOR OPENINGS	PEMKO - EQ.
1	VIEWER	698PB619 WIDE-ANGLE (190-200 DEGREES) AT 60" A.F.F. MAX	SCHLAGE OR EQ.
1	KICKPLATE	34" x 30" STAINLESS STEEL, PUSH SIDE ONLY	
1	DOOR HOLD OPEN	DOOR MOUNTED	
1	LOCK SET	LEVER TYPE, MECHANICAL PUSHBUTTON LOCK W/ FREE EGRESS, SATIN CHROME FINISH	SCHLAGE OR EQ.

SET NUMBER 2 - (RESTROOM)

	PART	DESCRIPTION	MFGR.
1 1/2 PR.	BUTT HINGES	FULL MORTISE 4"x4" BB1191-ANSI-A2112, BRASS WITH S/S PIN, US26D	HAGER OR EQ.
1	LOCK SET	PRIVACY LEVER TYPE (626)	SCHLAGE OR EQ.
1	CLOSER	LCN 1450 SURFACE MOUNTED, PULL SIDE, ALUM. FINISH (689)	LCN - EQ.
1	KICKPLATE	34"X12" STAINLESS STEEL, PUSH SIDE ONLY	-
1	SILENCER	AT PERIMETER OF DOOR	PEMKO - EQ.
1	DOOR HOLD OPEN	DOOR MOUNTED	
1	INDICATOR LOCK	NON-HANDED MEDIUM DUTY DEAD LOCK WITH THUMB TURN (KEYLESS) NOTE: THUMBTURN MUST OPERATE WITHOUT TIGHT GRASPING, TWISTING OR EXCESSIVE WRIST MOVEMENT (FLAG TYPE)	FALCON - EQ.

GENERAL DOOR NOTES

1. GC TO VERIFY THAT EGRESS DOOR & HARDWARE COMPLIES WITH ACCESSIBILITY REQUIREMENTS.
2. ENTRY DOOR TO BE MARKED "THIS DOOR TO REMAIN UNLOCKED WHEN SPACE IS OCCUPIED" - TO BE MOUNTED ABOVE THE DOOR WITH 1" HIGH LETTERS, COLOR IN CONTRAST TO THE BACKGROUND.
3. ALL DOORS SHALL OPERATE WITH A SINGLE EFFORT BY LEVER TYPE HARDWARE, PANIC BARS, OR PUSH PULL ACTIVATION BARS. SEE SPECIFICATIONS.
4. DOOR CLOSER, IF PRESENT MUST BE SET SO THAT IT TAKES DOOR AT LEAST 5 SECONDS TO CLOSE FROM AN OPEN POSITION OF 90 DEGREES TO WITHIN 12 DEGREES OF LATCH.
5. EFFORTS TO OPERATE DOORS WITHIN PRESSURES ALLOWED: INTERIOR DOORS 5LBS. MAXIMUM PRESSURE TO OPERATE, FIRE DOORS 15 LBS. MAXIMUM PRESSURE TO OPERATE
6. THE WIDTH OF THE OF THE LEVEL AREA ON THE SIDE OF WHICH THE DOOR SWINGS SHALL EXTEND 24" PAST THE STRIKE EDGE OF THE DOOR FOR EXTERIOR DOORS AND 18" PAST THE STRIKE EDGE FOR INTERIOR WALLS.
7. PROVIDE DOOR BOTTOMS AND EXIT SADDLES ON ALL EXTERIOR DOORS.
8. ALL EXITS ARE TO BE OPENABLE FROM INSIDE WITHOUT THE USE OF KEY OR SPECIAL KNOWLEDGE.
9. ALL EGRESS/EXIT DOORS SHALL BE OF THE PIVOTED OR SIDE-HINGED SWINGING TYPE PER SECTION 1008.12.
10. G.C. TO VERIFY QUANTITY OF MASTER KEYS TO PROVIDE.
11. ALL DOOR HARDWARE (LOCKSETS, PUSH / PULLS, DEADLOCKS, ETC.) SHALL BE MOUNTED NOT LESS THAN 34" A.F.F., NOR MORE THAN 48" A.F.F.

ABBREVATIONS

AL	ALUMINUM
SC	SOLID CORE WOOD DOOR
HM	HOLLOW METAL
GL	GLASS

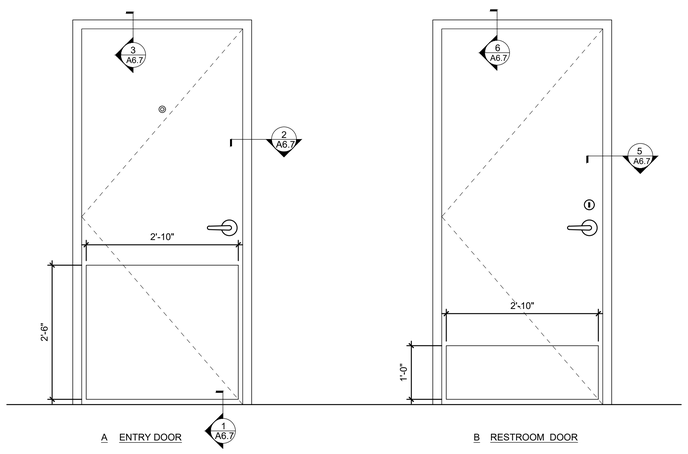

A ENTRY DOOR

B RESTROOM DOOR

2 TYPICAL DOOR ELEVATIONS

SCALE: 3/4"=1'-0"

a. FOR NON-FlaNgeD DOORS ONly

SteP 6a

A. Prepare head flashing by cutting a piece of DuPont™StraightFlash™VF at least twelve (12) inches longer than the head length.

B. Remove the release paper from one side of DuPont™ StraightFlash™VF.

C. Center the flashing along the length of the door and position so that it contacts the door frame.

D. At the corner of the door frame, cut the DuPont™ StraightFlash™VF along the corner at a 45° angle.

E. Fold it down flat in the vertical direction parallel to the door frame.

F. Fold remaining head flashing ears to the jamb.

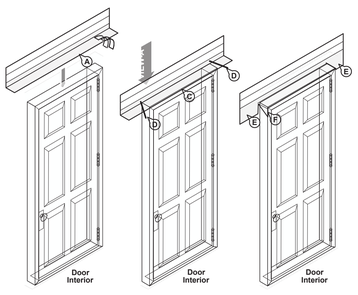

SteP 7a

A. Prepare jamb flashing by cutting a piece of DuPont™StraightFlash™VF at least six (6) inches longer than the jamb length.

B. Remove the release paper from one side of DuPont™ StraightFlash™VF.

C. Position so that it contacts the door frame up to the exterior face of the door. Ensure that the jamb flashing is positioned 1-1/2 inches below top of head flashing. Jamb flashing adhesive must **come in contact with head flashing adhesive and overlap by one inch.**

D. Repeat step for the other jamb.

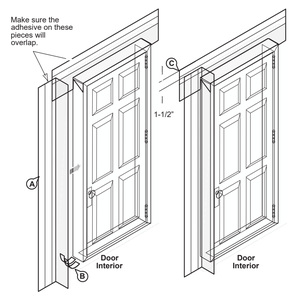

SteP 8a

A. At the corner of the door frame cut the DuPont™StraightFlash™VF along the corner at a 45° angle and fold it over flat to adhere it against the head flashing.

B. Repeat on opposite jamb.

C. Cut two 3" x 3" DuPont™ FlexWrap™squares and add patches to corners of the door. Staple to wooden frame.

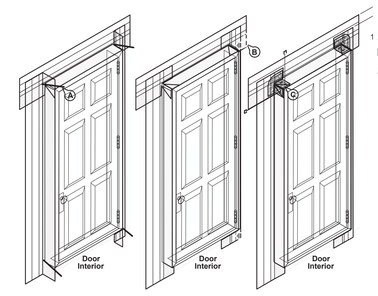

SteP 8

Final Step

A. Tool sealant around the window opening at the interior, using DuPont™Weatherization Sealant or DuPont Recommended Low Expansion Foam (and backer rod as necessary). Sealant and backer rod will also serve as a back dam.

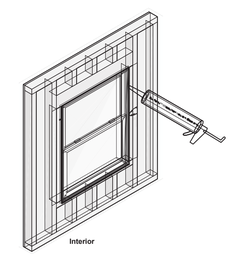

1 FLASHING DETAILS

SCALE: NTS

GHA
Architecture / Development
14901 Quorum Drive
Suite 300
Dallas Texas 75254
Ph: (972) 239-8884
Fax: (972) 239-5054

STATE OF MICHIGAN
KEVIN HENDERSON
ARCHITECT
No. 4001058108
LICENSED ARCHITECT
12/21/2021

EST. 1998
SCOOTER'S COFFEE

PROJECT ADDRESS:
1490 WEST ANN ARBOR ROAD
PLYMOUTH, MI 48170

REVISIONS:

TITLE:
DOOR SCHEDULE

DATE:
12/21/2021

PROJECT NO.
210536

- [ ] DESIGN DEVELOPMENT
- [x] PERMIT SUBMITTAL
- [x] BID PACKAGE
- [ ] CONSTRUCTION ISSUE

SHEET NO.

A5.2

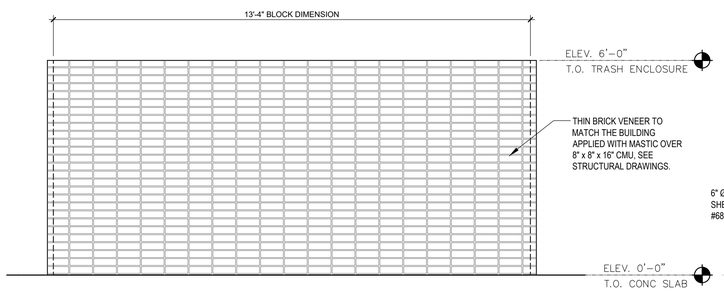

7 TRASH ENCLOSURE - BACK ELEVATION

SCALE: 1/2" = 1'-0"

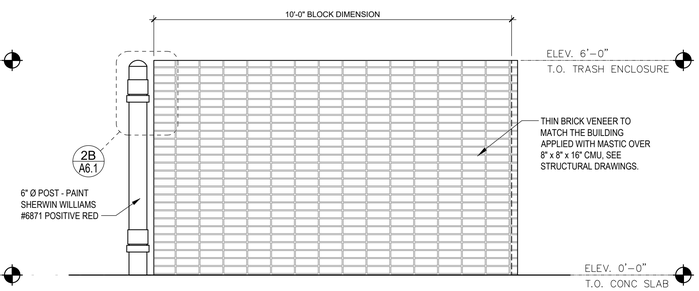

6 TRASH ENCLOSURE - SIDE BACK ELEVATION

SCALE: 1/2" = 1'-0"

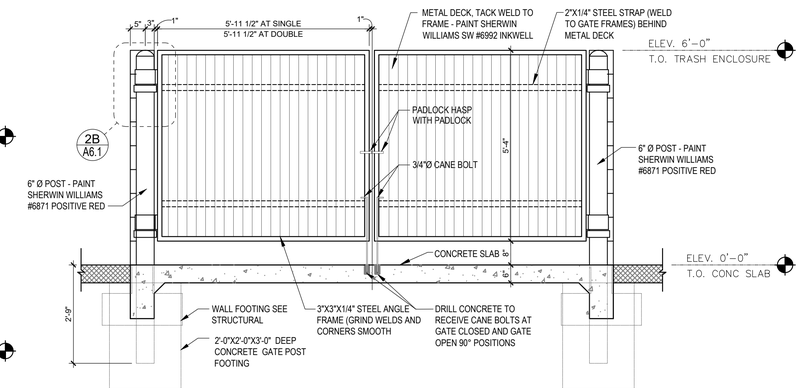

5 TRASH ENCLOSURE -FRONT ELEVATION

SCALE: 1/2" = 1'-0"

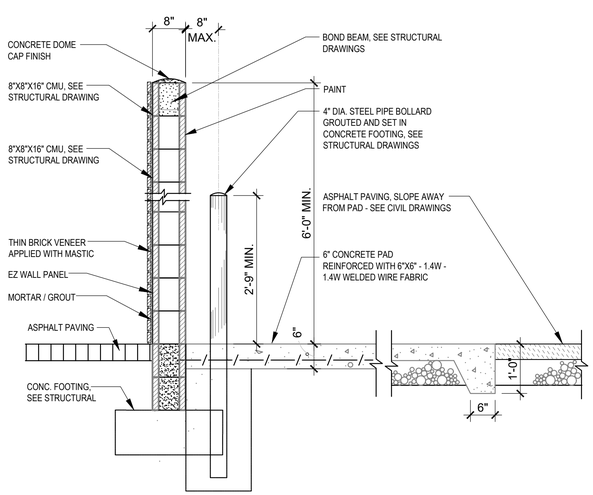

3 SECTION AT TRASH ENCLOSURE

SCALE: 3/4" = 1'-0"

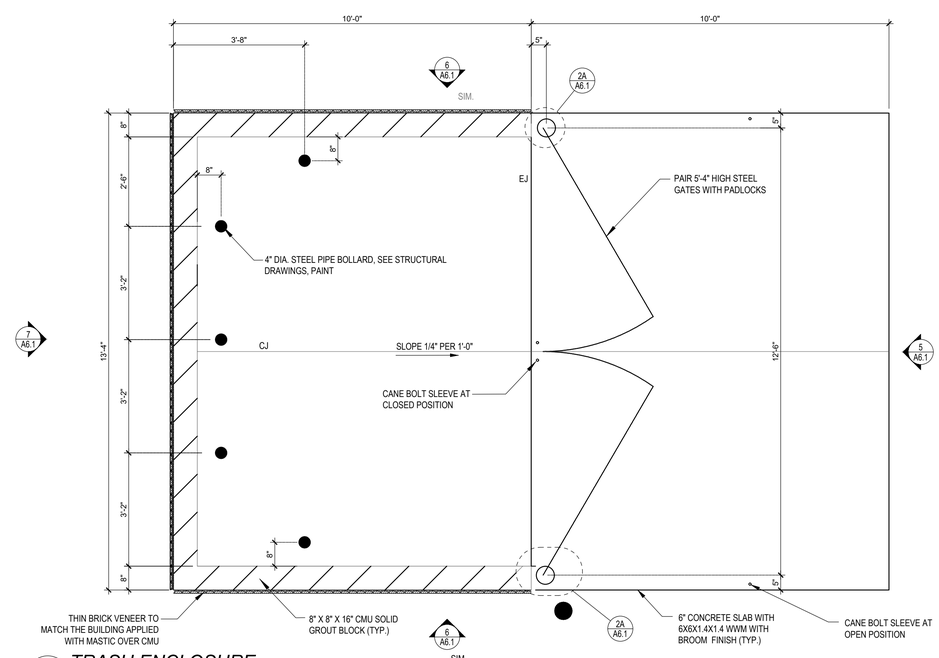

1 TRASH ENCLOSURE

SCALE: 1/2" = 1'-0"

THIS DRAWING AND ITS CONTENTS ARE THE COPYRIGHTED PROPERTY OF GHA ARCHITECTS. THE ARCHITECT. THIS DRAWING IS TO BE RETURNED UPON REQUEST. USE THEREOF IS LIMITED TO THE SPECIFIC PROJECT AND SITE SET FORTH ABOVE, AND MAY NOT BE OTHERWISE USED OR REPRODUCED, IN WHOLE OR IN PART, WITHOUT THE WRITTEN PERMISSION OF GHA ARCHITECTS.

GHA
Architecture / Development
14901 Quorum Drive
Suite 300
Dallas Texas 75254
Ph: (972) 239-8884
Fax: (972) 239-5054

STATE OF MICHIGAN
KEVIN HENDERSON
ARCHITECT
No. #801054019
LICENSED ARCHITECT
12/21/2021

EST. 1998
SCOOTER'S COFFEE

PROJECT ADDRESS:
1490 WEST ANN ARBOR ROAD
PLYMOUTH, MI 48170

REVISIONS:

TITLE:
TRASH ENCLOSURE ELEVATIONS & DETAILS

DATE:
12/21/2021

PROJECT NO.
210536

- [ ] DESIGN DEVELOPMENT
- [x] PERMIT SUBMITTAL
- [x] BID PACKAGE
- [ ] CONSTRUCTION ISSUE

SHEET NO.
A6.1

THIS DRAWING AND ITS CONTENTS ARE THE COPYRIGHTED PROPERTY OF GHA ARCHITECTS USE THEREOF IS LIMITED TO THE SPECIFIC PROJECT AND SITE SET FORTH ABOVE, AND MAY NOT BE OTHERWISE USED OR REPRODUCED, IN WHOLE OR IN PART, WITHOUT THE WRITTEN PERMISSION OF GHA ARCHITECTS, THE ARCHITECT. THIS DRAWING IS TO BE RETURNED UPON REQUEST.

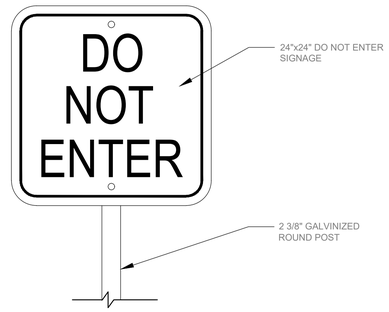

7 DO NOT ENTER SIGNAGE
SCALE: NTS

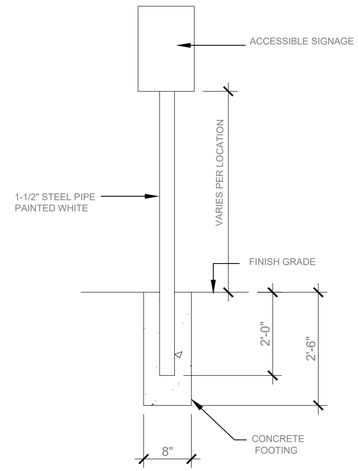

4 SIGN DETAIL
SCALE: NTS

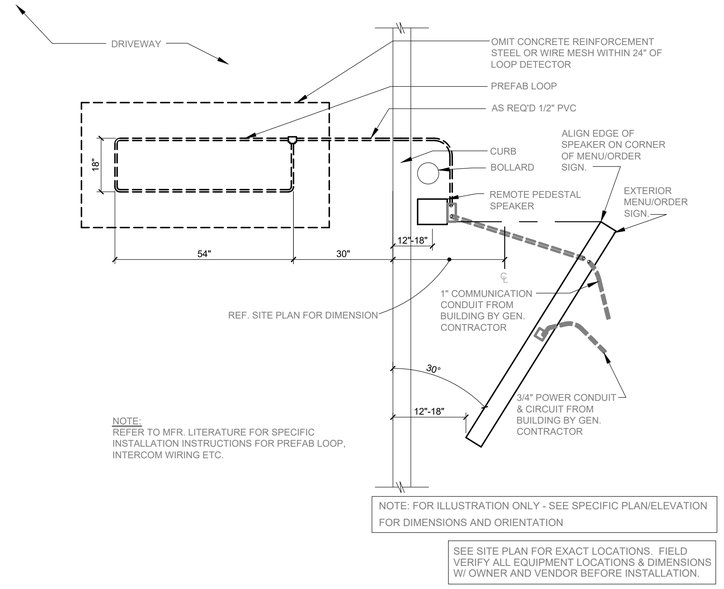

NOTE:
REFER TO MFR. LITERATURE FOR SPECIFIC INSTALLATION INSTRUCTIONS FOR PREFAB LOOP, INTERCOM WIRING ETC.

NOTE: FOR ILLUSTRATION ONLY - SEE SPECIFIC PLAN/ELEVATION FOR DIMENSIONS AND ORIENTATION

SEE SITE PLAN FOR EXACT LOCATIONS. FIELD VERIFY ALL EQUIPMENT LOCATIONS & DIMENSIONS W/ OWNER AND VENDOR BEFORE INSTALLATION.

2 MAGNETIC DETECTOR LOOP PLACEMENT
SCALE: NTS

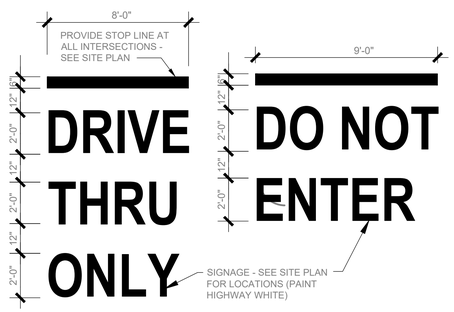

6 PAINTED SIGNAGE AT PAVING
SCALE: NTS

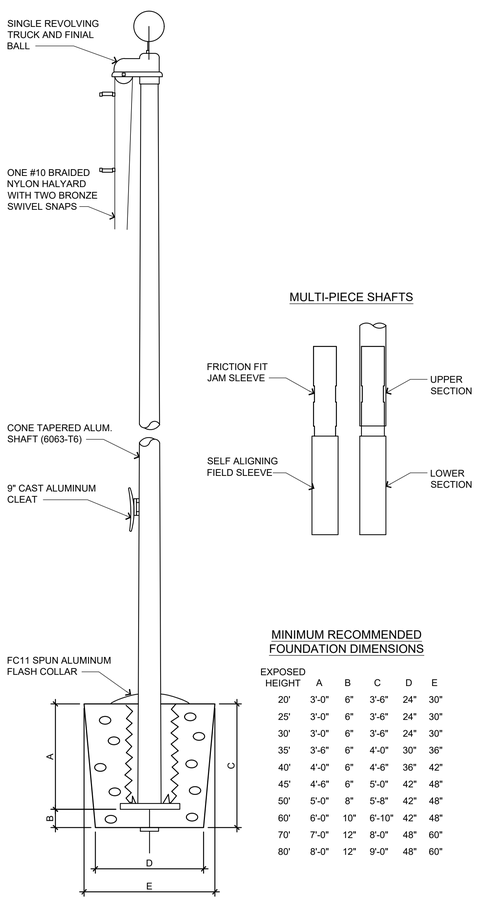

MINIMUM RECOMMENDED FOUNDATION DIMENSIONS

EXPOSED HEIGHT	A	B	C	D	E
20'	3'-0"	6"	3'-6"	24"	30"
25'	3'-0"	6"	3'-6"	24"	30"
30'	3'-0"	6"	3'-6"	24"	30"
35'	3'-6"	6"	4'-0"	30"	36"
40'	4'-0"	6"	4'-6"	36"	42"
45'	4'-6"	6"	5'-0"	42"	48"
50'	5'-0"	8"	5'-8"	42"	48"
60'	6'-0"	10"	6'-10"	42"	48"
70'	7'-0"	12"	8'-0"	48"	60"
80'	8'-0"	12"	9'-0"	48"	60"

8 FLAGPOLE GROUND SET INSTALLATION
SCALE: NTS

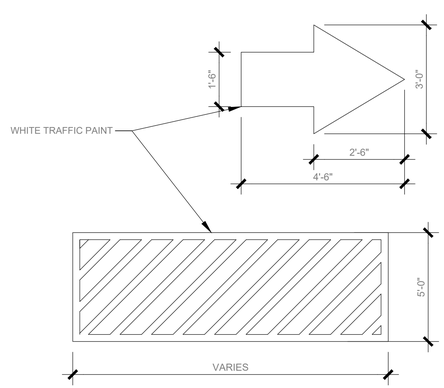

5 PAINTED TRAFFIC SYMBOLS
SCALE: NTS

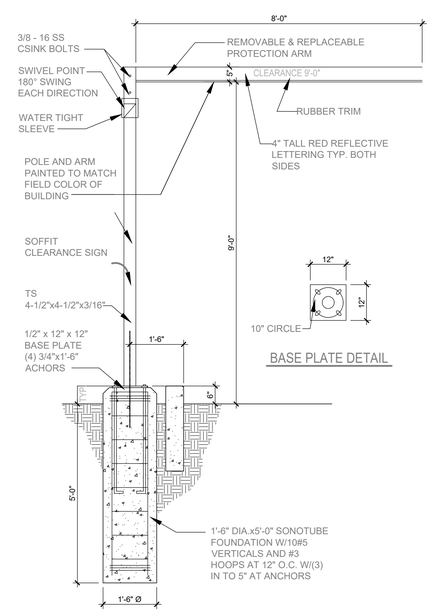

3 HEIGHT CLEARANCE SIGN DETAIL
SCALE: NTS

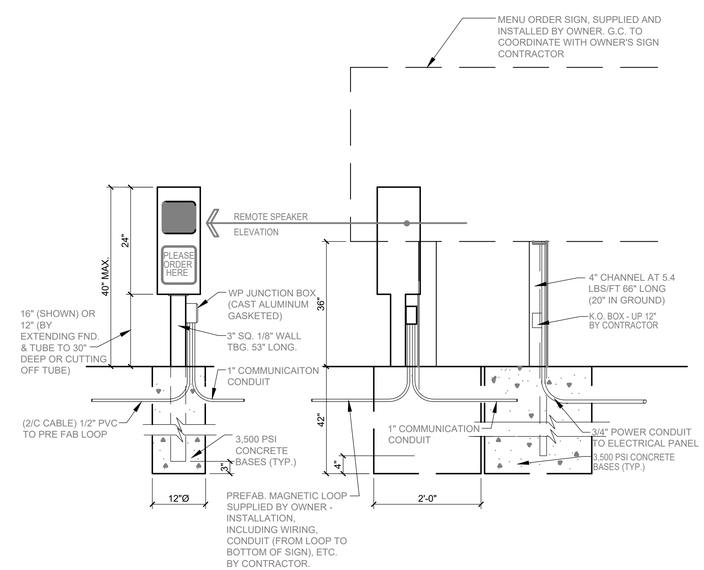

1 MENU BOARD CALLL BOX DETAIL
SCALE: NTS

GHA
Architecture / Development
14901 Quorum Drive
Suite 300
Dallas Texas 75254
Ph: (972) 239-8884
Fax: (972) 239-5054

STATE OF MICHIGAN
KEVIN J. HENDERSON
ARCHITECT
No. 1301105439
LICENSED ARCHITECT
12/21/2021

EST. 1998
SCOOTER'S COFFEE

PROJECT ADDRESS:
1490 WEST ANN ARBOR ROAD
PLYMOUTH, MI 48170

REVISIONS:

TITLE:
SITE DETAILS

DATE:
12/21/2021

PROJECT NO.
210536

- [ ] DESIGN DEVELOPMENT
- [x] PERMIT SUBMITTAL
- [x] BID PACKAGE
- [ ] CONSTRUCTION ISSUE

SHEET NO.
A6.2

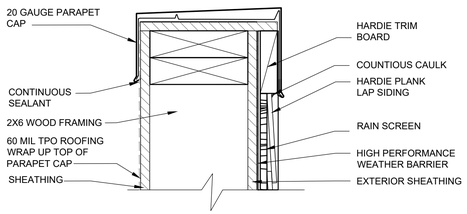

9 DETAIL AT PARAPET

SCALE: 3" = 1'-0" G.C. VERIFY DETAIL PER MANUFACTURES INSTRUCTIONS

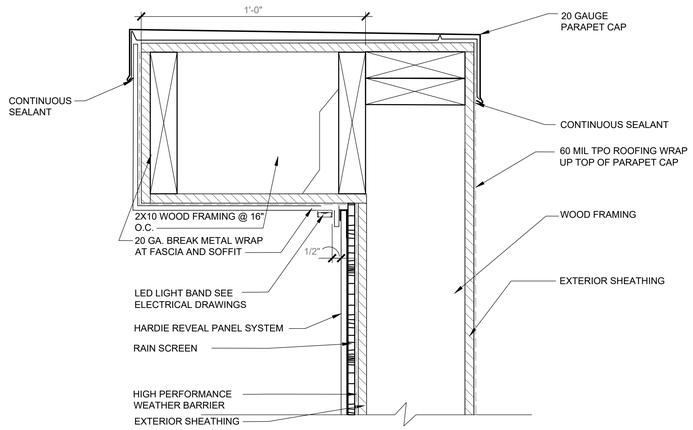

6 DETAIL AT PARAPET

SCALE: 3" = 1'-0" G.C. VERIFY DETAIL PER MANUFACTURES INSTRUCTIONS

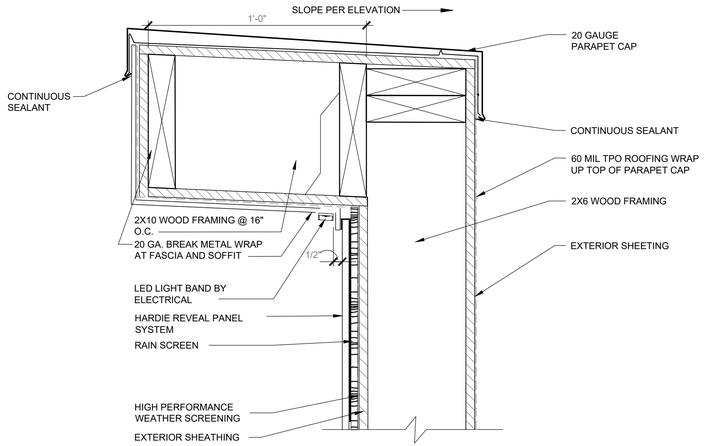

3 DETAIL AT PARAPET

SCALE: 3" = 1'-0" G.C. VERIFY DETAIL PER MANUFACTURES INSTRUCTIONS

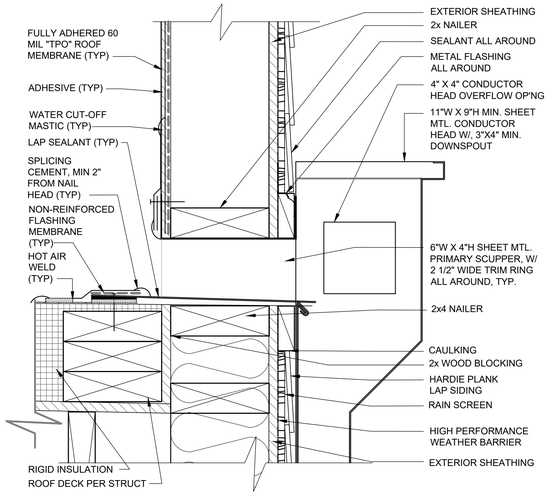

8 DETAIL AT ROOF SCUPPER

SCALE: 3" = 1'-0"

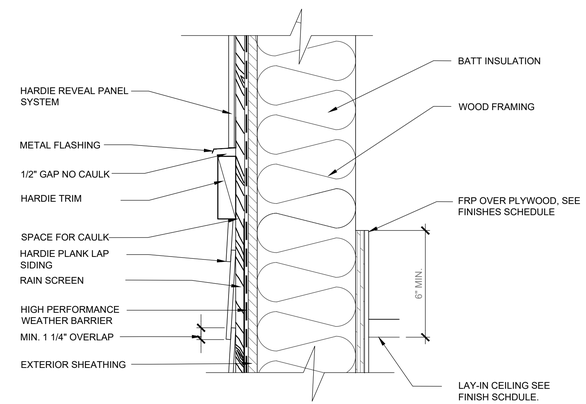

5 DETAIL AT HARDIE TRIM

SCALE: 3" = 1'-0" G.C. VERIFY DETAIL PER MANUFACTURES INSTRUCTIONS

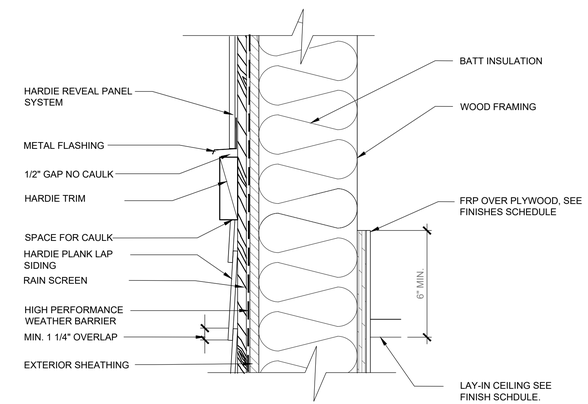

2 DETAIL AT HARDIE TRIM

SCALE: 3" = 1'-0" G.C. VERIFY DETAIL PER MANUFACTURES INSTRUCTIONS

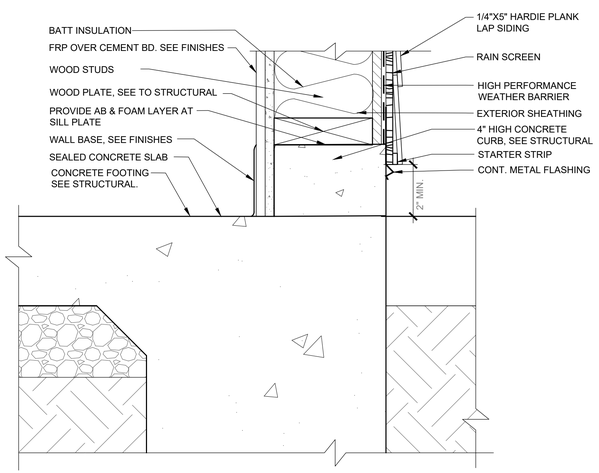

7 DETAIL AT CONCRETE FOOTING

SCALE: 3" = 1'-0"

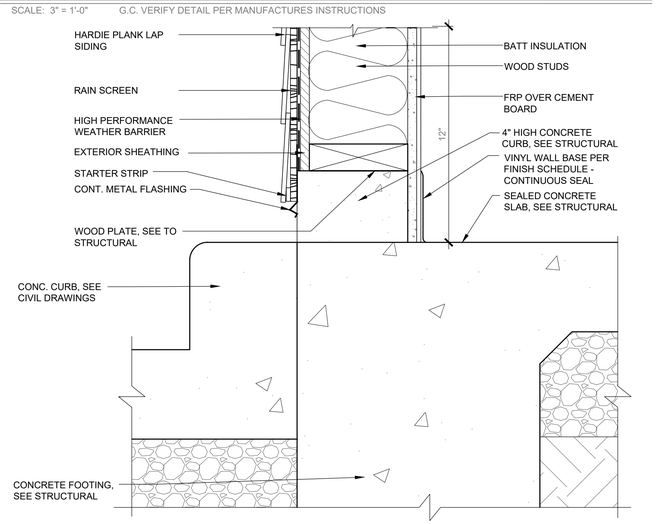

4 DETAIL AT FOOTING AND SIDEWALK

SCALE: 3" = 1'-0"

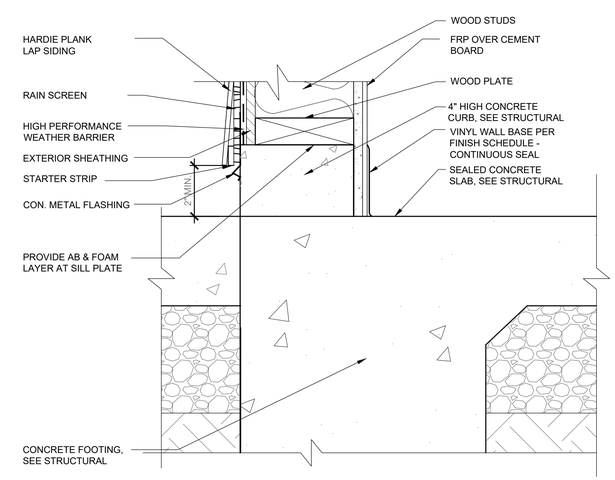

1 DETAIL AT FOOTING AND DRIVE THRU

SCALE: 3" = 1'-0"

GHA
Architecture / Development
14901 Quorum Drive
Suite 300
Dallas Texas 75254
Ph: (972) 239-8884
Fax: (972) 239-5054

STATE OF MICHIGAN KEVIN HENDERSON ARCHITECT No. 1301058108 LICENSED ARCHITECT
12/21/2021

EST. 1998 SCOOTER'S COFFEE

PROJECT ADDRESS:
1490 WEST ANN ARBOR ROAD
PLYMOUTH, MI 48170

REVISIONS:

TITLE:
WALL DETAILS

DATE:
12/21/2021

PROJECT NO.
210536

- [ ] DESIGN DEVELOPMENT
- [x] PERMIT SUBMITTAL
- [x] BID PACKAGE
- [ ] CONSTRUCTION ISSUE

SHEET NO.
A6.3

THIS DRAWING AND ITS CONTENTS ARE THE COPYRIGHTED PROPERTY OF GHA ARCHITECTS USE THEREOF IS LIMITED TO THE SPECIFIC PROJECT AND SITE SET FORTH ABOVE, AND MAY NOT BE OTHERWISE USED OR REPRODUCED, IN WHOLE OR IN PART, WITHOUT THE WRITTEN PERMISSION OF GHA ARCHITECTS. THE ARCHITECT. THIS DRAWING IS TO BE RETURNED UPON REQUEST.

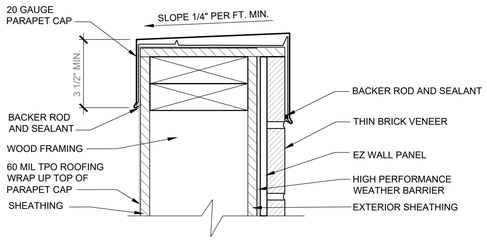

9 DETAIL AT PARAPET

SCALE: 3" = 1'-0" G.C. VERIFY DETAIL PER MANUFACTURES INSTRUCTIONS

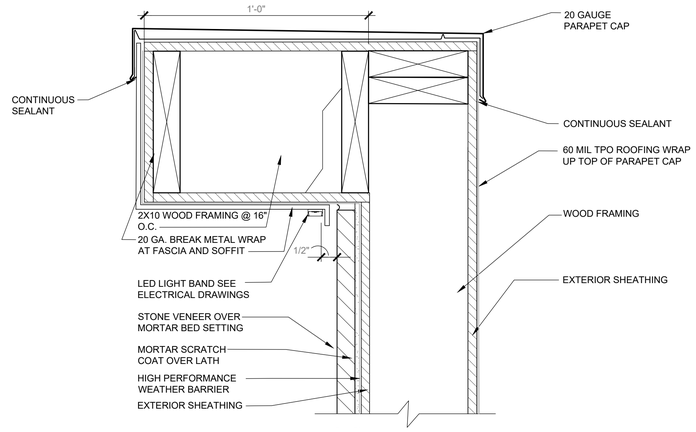

6 DETAIL AT PARAPET

SCALE: 3" = 1'-0" G.C. VERIFY DETAIL PER MANUFACTURES INSTRUCTIONS

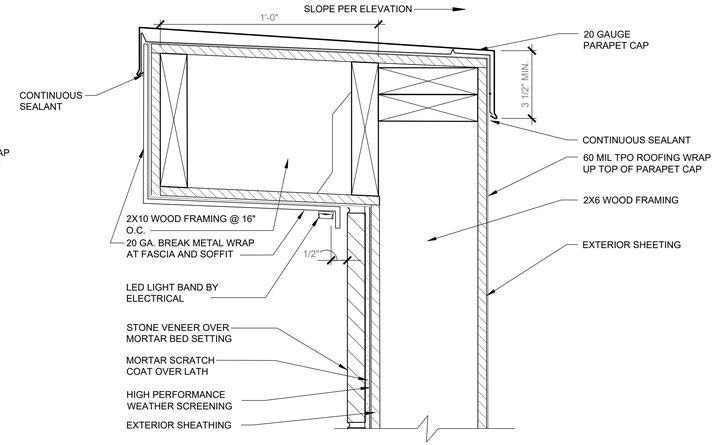

3 DETAIL AT PARAPET

SCALE: 3" = 1'-0" G.C. VERIFY DETAIL PER MANUFACTURES INSTRUCTIONS

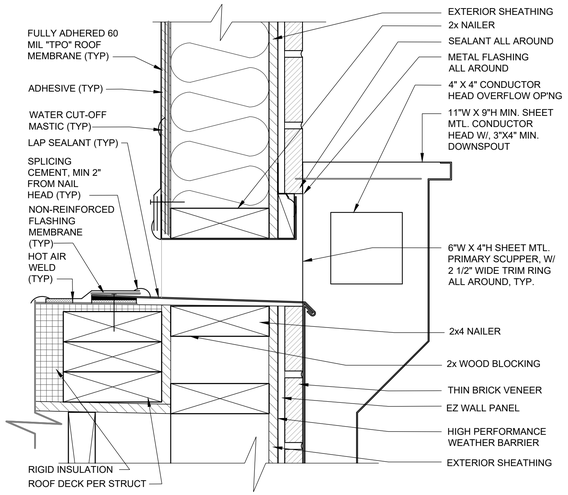

8 DETAIL AT ROOF SCUPPER

SCALE: 3" = 1'-0"

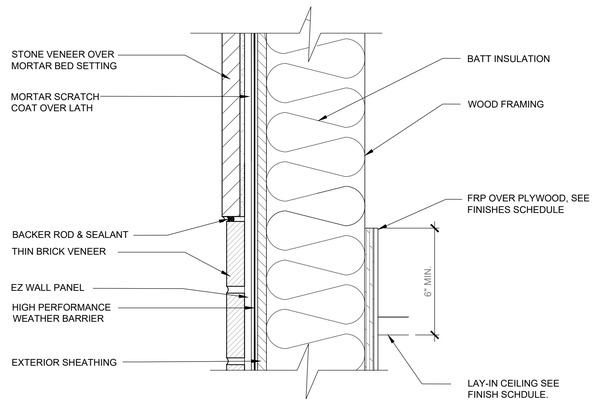

5 DETAIL AT ROLOCK STONE SILL

SCALE: 3" = 1'-0" G.C. VERIFY DETAIL PER MANUFACTURES INSTRUCTIONS

2 NOT USED

SCALE: 3" = 1'-0" G.C. VERIFY DETAIL PER MANUFACTURES INSTRUCTIONS

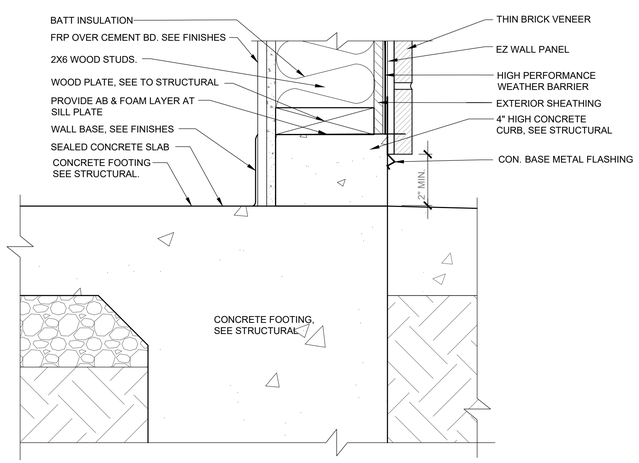

7 DETAIL AT CONCRETE FOOTING

SCALE: 3" = 1'-0"

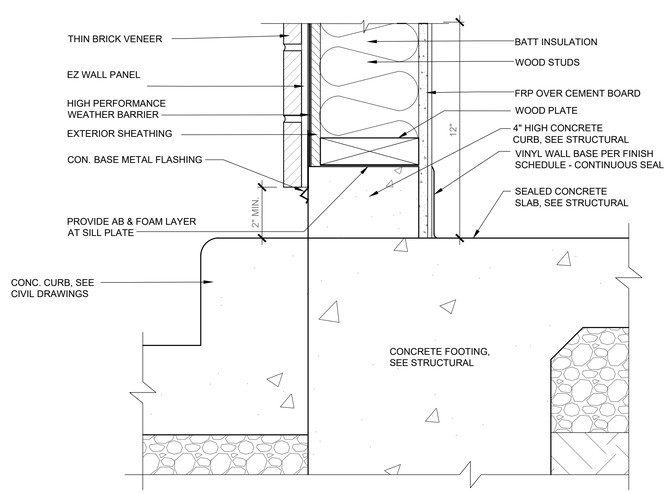

4 DETAIL AT FOOTING AND SIDEWALK

SCALE: 3" = 1'-0"

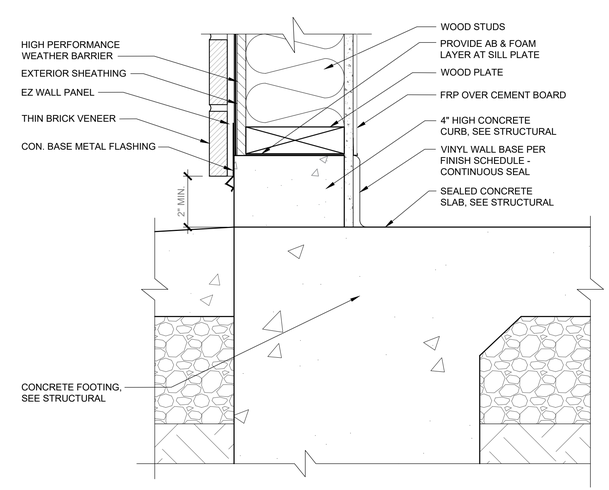

1 DETAIL AT FOOTING AND DRIVE THRU

SCALE: 3" = 1'-0"

GHA
Architecture / Development
14901 Quorum Drive
Suite 300
Dallas Texas 75254
Ph: (972) 239-8884
Fax: (972) 239-5054

STATE OF MICHIGAN
KEVIN HENDERSON
ARCHITECT
No. 4001050109
LICENSED ARCHITECT
12/21/2021

EST. 1998
SCOOTER'S COFFEE

PROJECT ADDRESS:
1490 WEST ANN ARBOR ROAD
PLYMOUTH, MI 48170

REVISIONS:

TITLE:
WALL DETAILS

DATE:
12/21/2021

PROJECT NO.
210536

- [ ] DESIGN DEVELOPMENT
- [x] PERMIT SUBMITTAL
- [x] BID PACKAGE
- [ ] CONSTRUCTION ISSUE

SHEET NO.
A6.3

THIS DRAWING AND ITS CONTENTS ARE THE COPYRIGHTED PROPERTY OF GHA ARCHITECTS USE THEREOF IS LIMITED TO THE SPECIFIC PROJECT AND SITE SET FORTH ABOVE, AND MAY NOT BE OTHERWISE USED OR REPRODUCED, IN WHOLE OR IN PART, WITHOUT THE WRITTEN PERMISSION OF GHA ARCHITECTS, THE ARCHITECT. THIS DRAWING IS TO BE RETURNED UPON REQUEST.

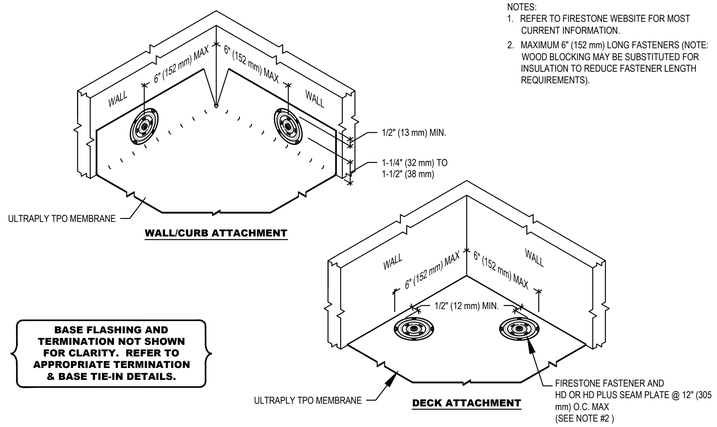

NOTES:
1. REFER TO FIRESTONE WEBSITE FOR MOST CURRENT INFORMATION.
2. MAXIMUM 6" (152 mm) LONG FASTENERS (NOTE: WOOD BLOCKING MAY BE SUBSTITUTED FOR INSULATION TO REDUCE FASTENER LENGTH REQUIREMENTS).

6 MEMBRANE SECUREMENT AT INSIDE CORNER

SCALE: NTS

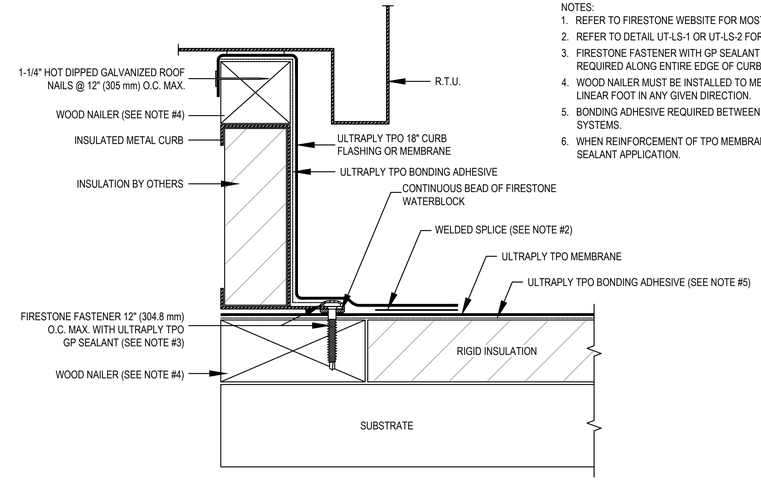

NOTES:
1. REFER TO FIRESTONE WEBSITE FOR MOST CURRENT INFORMATION.
2. REFER TO DETAIL UT-LS-1 OR UT-LS-2 FOR WELD WIDTH.
3. FIRESTONE FASTENER WITH GP SEALANT OVER FASTENER HEADS. GP SEALANT ALSO REQUIRED ALONG ENTIRE EDGE OF CURB FLANGE.
4. WOOD NAILER MUST BE INSTALLED TO MEET APPLICABLE BUILDING CODES OR 200 LBS PER LINEAR FOOT IN ANY GIVEN DIRECTION.
5. BONDING ADHESIVE REQUIRED BETWEEN MEMBRANE AND INSULATION FOR FULLY ADHERED SYSTEMS.
6. WHEN REINFORCEMENT OF TPO MEMBRANE IS EXPOSED, REFER TO UT-LS-14 FOR CUT EDGE SEALANT APPLICATION.

3 TERMINATION AT R.T.U. (UNIT FLANGE ABOVE MEMBRANE)

SCALE: NTS

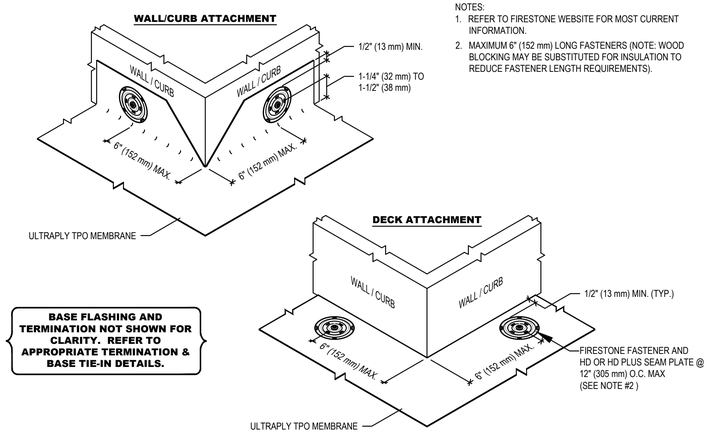

NOTES:
1. REFER TO FIRESTONE WEBSITE FOR MOST CURRENT INFORMATION.
2. MAXIMUM 6" (152 mm) LONG FASTENERS (NOTE: WOOD BLOCKING MAY BE SUBSTITUTED FOR INSULATION TO REDUCE FASTENER LENGTH REQUIREMENTS).

5 MEMBRANE SECUREMENT AT OUTSIDE CORNER

SCALE: NTS

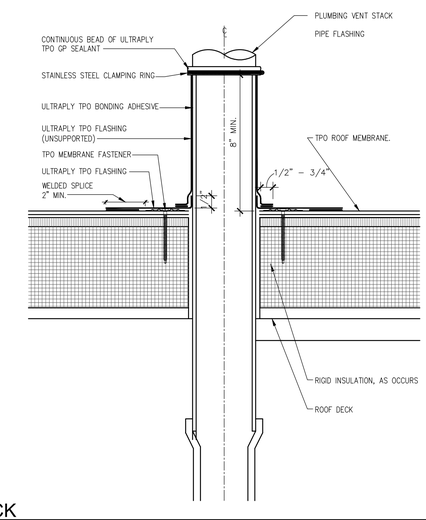

2 PLUMBING VENT STACK

SCALE: NTS

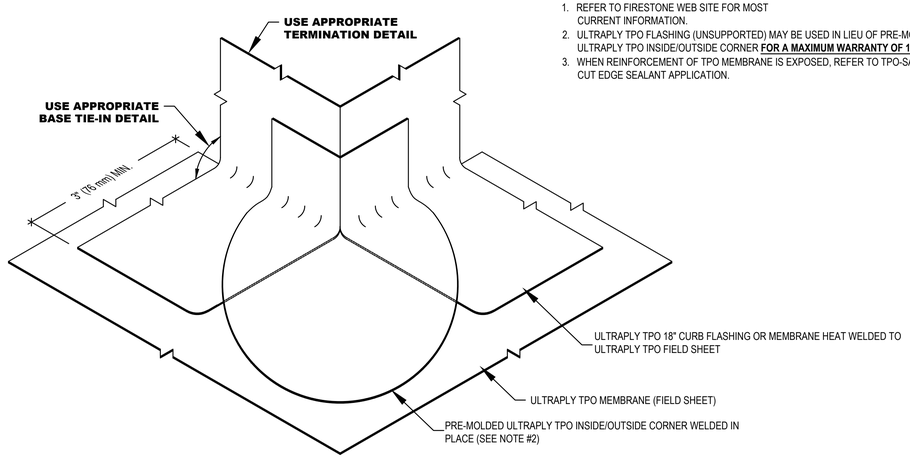

NOTES:
1. REFER TO FIRESTONE WEB SITE FOR MOST CURRENT INFORMATION.
2. ULTRAPLY TPO FLASHING (UNSUPPORTED) MAY BE USED IN LIEU OF PRE-MOLDED ULTRAPLY TPO INSIDE/OUTSIDE CORNER **FOR A MAXIMUM WARRANTY OF 15 YEARS.**
3. WHEN REINFORCEMENT OF TPO MEMBRANE IS EXPOSED, REFER TO TPO-SA-LS-7 FOR CUT EDGE SEALANT APPLICATION.

4 OUTSIDE CORNER

SCALE: NTS

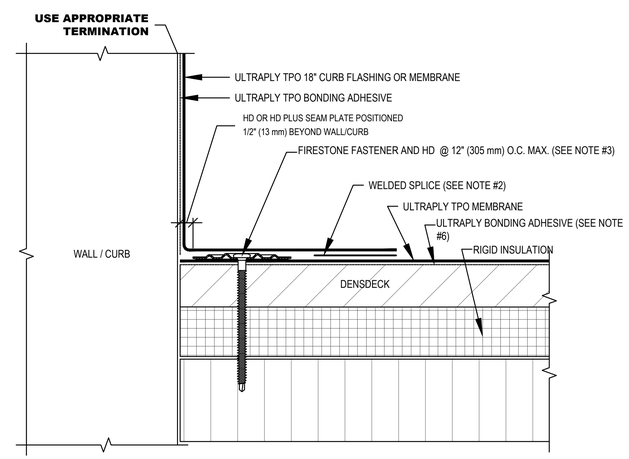

NOTES:
1. REFER TO FIRESTONE WEBSITE FOR MOST CURRENT INFORMATION.
2. REFER TO DETAIL UT-LS-1 OR UT-LS-2 FOR WELD WIDTH.
3. MAXIMUM 6" (152 mm) LONG FASTENERS (NOTE: WOOD BLOCKING MAY BE SUBSTITUTED FOR INSULATION TO REDUCE FASTENER LENGTH REQUIREMENTS).
4. IN CASE OF OBSTRUCTION REFER TO DETAIL UT-BT-5.
5. REFER TO UT-BT-16 & UT-BT-17 FOR MEMBRANE SECUREMENT AT CORNERS.
6. BONDING ADHESIVE REQUIRED BETWEEN MEMBRANE AND INSULATION FOR FULLY ADHERED SYSTEMS.
7. WHEN REINFORCEMENT OF TPO MEMBRANE IS EXPOSED, REFER TO UT-LS-14 FOR CUT EDGE SEALANT APPLICATION.

NOTE:

REFERENCE FIRESTONE THERMOPLASTIC POLYOELFIN (TPO) ROOFING DETAILS

1 BASE TIE-IN WITH HD SEAM PLATES FASTENED TO DECK

SCALE: NTS

GHA
Architecture / Development
14901 Quorum Drive
Suite 300
Dallas Texas 75254
Ph: (972) 239-8884
Fax: (972) 239-5054

STATE OF MICHIGAN KEVIN HENDERSON ARCHITECT No. 4001058-09 LICENSED ARCHITECT

12/21/2021

EST. 1998 SCOOTER'S COFFEE

PROJECT ADDRESS:
1490 WEST ANN ARBOR ROAD
PLYMOUTH, MI 48170

REVISIONS:

TITLE:
TPO ROOF DETAILS

DATE:
12/21/2021

PROJECT NO.
210536

- [ ] DESIGN DEVELOPMENT
- [x] PERMIT SUBMITTAL
- [x] BID PACKAGE
- [ ] CONSTRUCTION ISSUE

SHEET NO.

A6.4

THIS DRAWING AND ITS CONTENTS ARE THE COPYRIGHTED PROPERTY OF GHA ARCHITECTS. USE THEREOF IS LIMITED TO THE SPECIFIC PROJECT AND SITE SET FORTH ABOVE, AND MAY NOT BE OTHERWISE USED OR REPRODUCED, IN WHOLE OR IN PART, WITHOUT THE WRITTEN PERMISSION OF GHA ARCHITECTS. THE ARCHITECT. THIS DRAWING IS TO BE RETURNED UPON REQUEST.

THIS DRAWING AND ITS CONTENTS ARE THE COPYRIGHTED PROPERTY OF GHA ARCHITECTS. USE THEREOF IS LIMITED TO THE SPECIFIC PROJECT AND SITE SET FORTH ABOVE, AND MAY NOT BE OTHERWISE USED OR REPRODUCED, IN WHOLE OR IN PART, WITHOUT THE WRITTEN PERMISSION OF GHA ARCHITECTS. THE ARCHITECT. THIS DRAWING IS TO BE RETURNED UPON REQUEST.

NOTE:
SIGNAGE UNDER A SEPARATE PERMIT

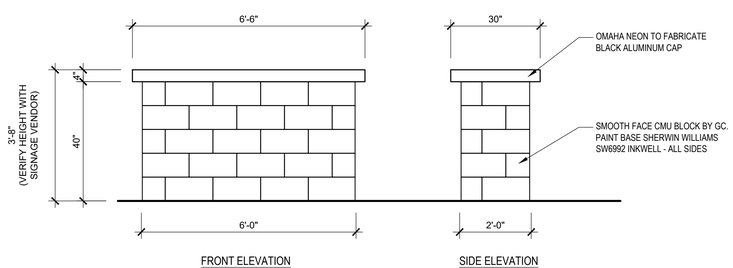

4 MONUMENT BASE ELEVATION
SCALE: 1/2" = 1'-0"

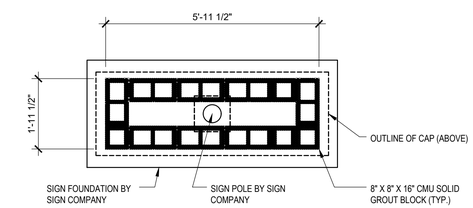

MONUMENT BASE - PLAN VIEW

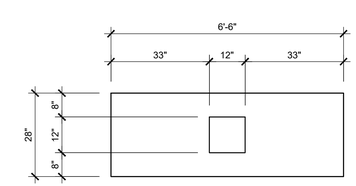

2 MONUMENT CAP - PLAN VIEW
SCALE: 1/2" = 1'-0"

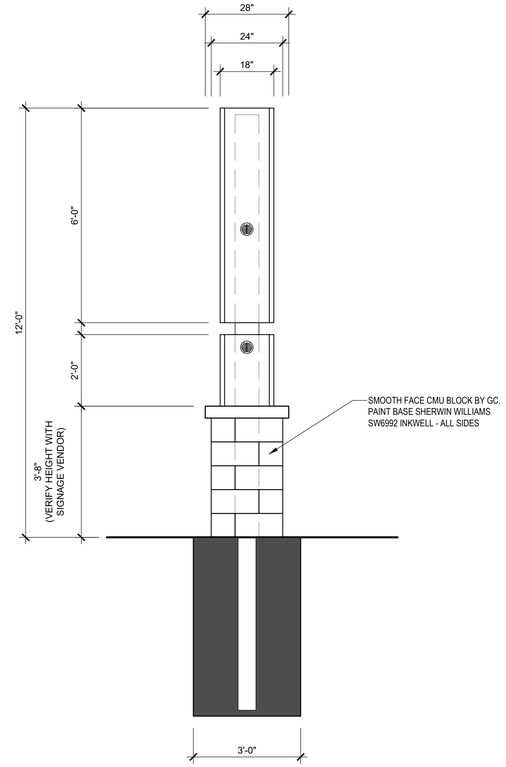

3 MONUMENT SIGN - SECTION
SCALE: 1/2" = 1'-0"

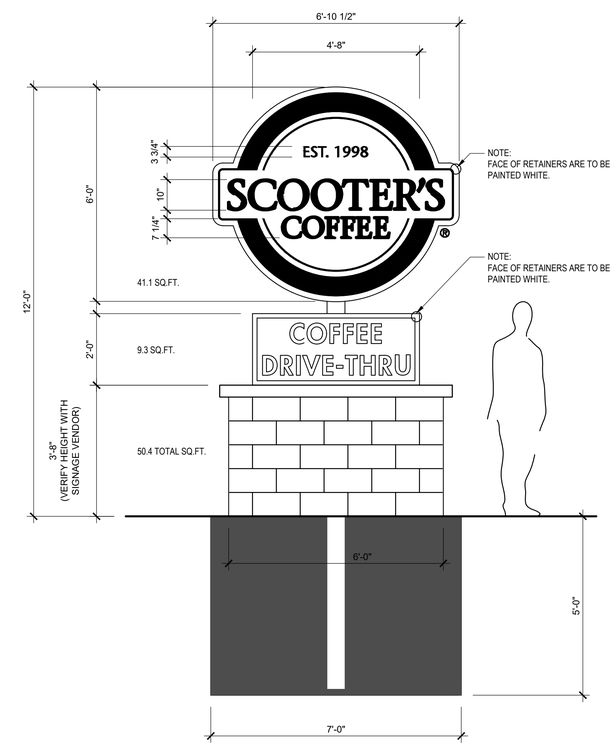

1 MONUMENT SIGN - FRONT ELEVATION
SCALE: 1/2" = 1'-0"

GHA
Architecture / Development
14901 Quorum Drive
Suite 300
Dallas Texas 75254
Ph: (972) 239-8884
Fax: (972) 239-5054

STATE OF MICHIGAN
KEVIN HENDERSON
ARCHITECT
No. 4501054019
LICENSED ARCHITECT
12/21/2021

EST. 1998
SCOOTER'S COFFEE

PROJECT ADDRESS:
1490 WEST ANN
ARBOR ROAD
PLYMOUTH, MI 48170

REVISIONS:

TITLE:
MONUMENT
SIGN DETAILS

DATE:
12/21/2021

PROJECT NO.
210536

- [ ] DESIGN DEVELOPMENT
- [x] PERMIT SUBMITTAL
- [x] BID PACKAGE
- [ ] CONSTRUCTION ISSUE

SHEET NO.
A6.6

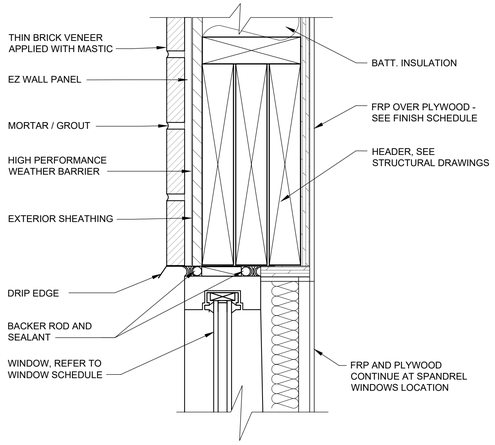

12 DETAIL AT WINDOW HEAD

SCALE: 3" = 1'-0" G.C. VERIFY DETAIL PER MANUFACTURES INSTRUCTIONS

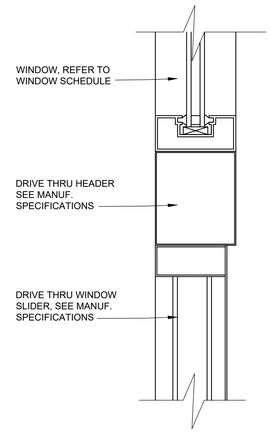

9 DETAIL AT HEADER DRIVE-THRU

SCALE: 3" = 1'-0" G.C. VERIFY DETAIL PER MANUFACTURES INSTRUCTIONS

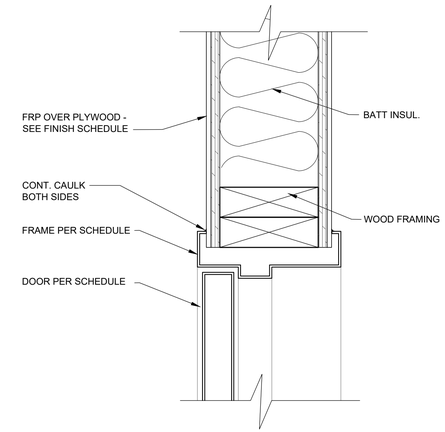

6 DETAIL AT INTERIOR DOOR HEADER

SCALE: 3" = 1'-0"

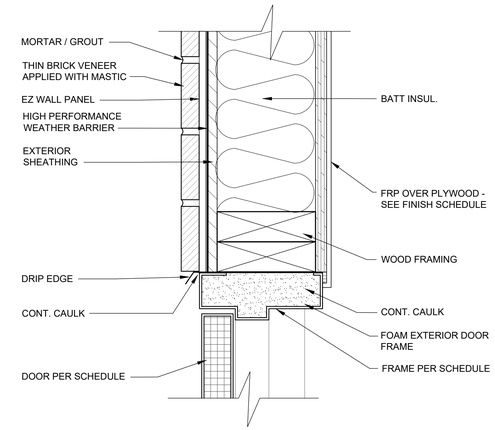

3 DETAIL AT DOOR HEADER

SCALE: 3" = 1'-0" G.C. VERIFY DETAIL PER MANUFACTURES INSTRUCTIONS

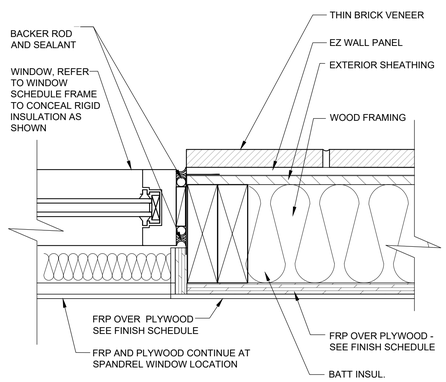

11 DETAIL AT WINDOW JAMB

SCALE: 3" = 1'-0"

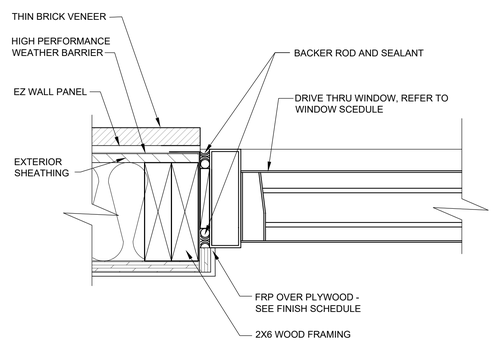

8 DETAIL AT JAMB DRIVE-THRU

SCALE: 3" = 1'-0" G.C. VERIFY DETAIL PER MANUFACTURES INSTRUCTIONS

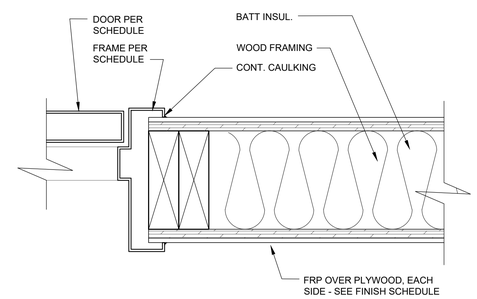

5 DETAIL AT INTERIOR DOOR JAM

SCALE: 3" = 1'-0"

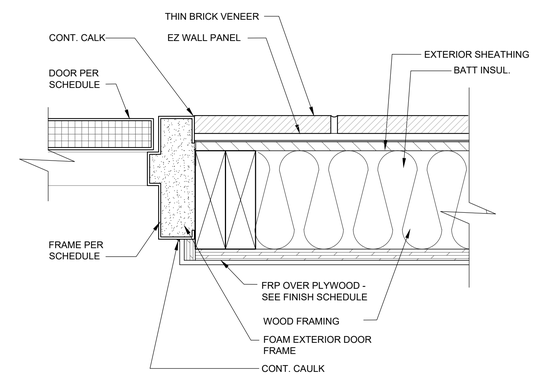

2 DETAIL AT DOOR JAMB

SCALE: 3" = 1'-0" G.C. VERIFY DETAIL PER MANUFACTURES INSTRUCTIONS

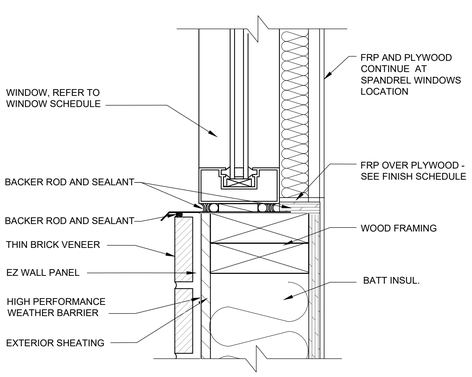

10 DETAIL AT WINDOW SILL

SCALE: 3" = 1'-0"

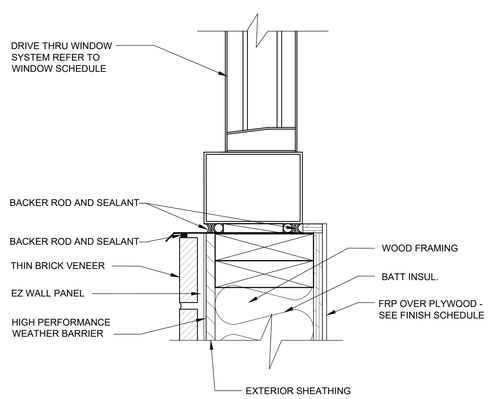

7 DETAIL AT SILL DRIVE-THRU

SCALE: 3" = 1'-0" G.C. VERIFY DETAIL PER MANUFACTURES INSTRUCTIONS

4 NOT USED

SCALE: 3" = 1'-0"

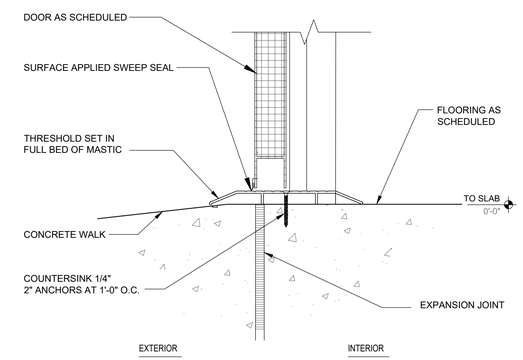

1 DETAIL AT DOOR THRESHOLD

SCALE: 3" = 1'-0" G.C. VERIFY DETAIL PER MANUFACTURES INSTRUCTIONS

GHA
Architecture / Development
14901 Quorum Drive
Suite 300
Dallas Texas 75254
Ph: (972) 239-8884
Fax: (972) 239-5054

STATE OF MICHIGAN KEVIN J. HENDERSON ARCHITECT No. 1301058-09 LICENSED ARCHITECT

12/21/2021

EST. 1998 SCOOTER'S COFFEE

PROJECT ADDRESS:
1490 WEST ANN ARBOR ROAD
PLYMOUTH, MI 48170

REVISIONS:

TITLE:
DOOR AND WINDOW DETAILS

DATE:
12/21/2021

PROJECT NO.
210536

- [ ] DESIGN DEVELOPMENT
- [x] PERMIT SUBMITTAL
- [x] BID PACKAGE
- [ ] CONSTRUCTION ISSUE

SHEET NO.
A6.7

THIS DRAWING AND ITS CONTENTS ARE THE COPYRIGHTED PROPERTY OF GHA ARCHITECTS. USE THEREOF IS LIMITED TO THE SPECIFIC PROJECT AND SITE SET FORTH ABOVE, AND MAY NOT BE OTHERWISE USED OR REPRODUCED, IN WHOLE OR IN PART, WITHOUT THE WRITTEN PERMISSION OF GHA ARCHITECTS. THE ARCHITECT. THIS DRAWING IS TO BE RETURNED UPON REQUEST.

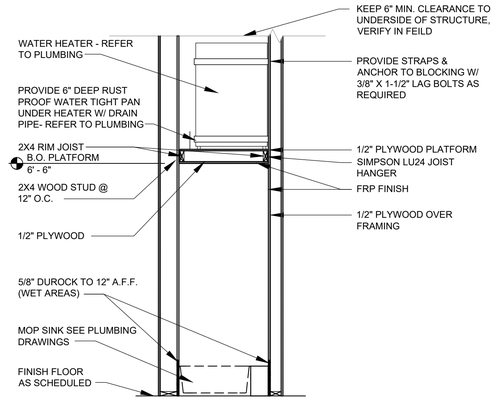

9 **WATER HEATER PLATFORM**

SCALE: 1/2"=1'-0"

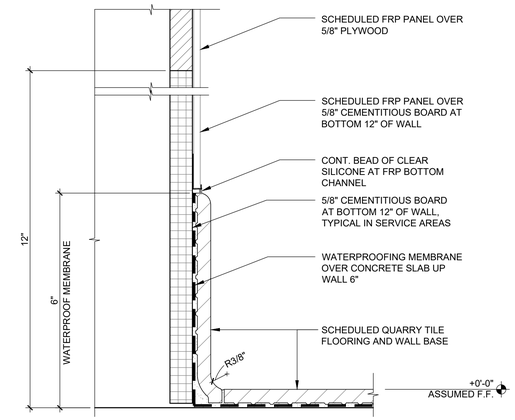

6 **QUARRY TILE COVE WALL BASE AT FRP**

SCALE: 6"=1'-0"

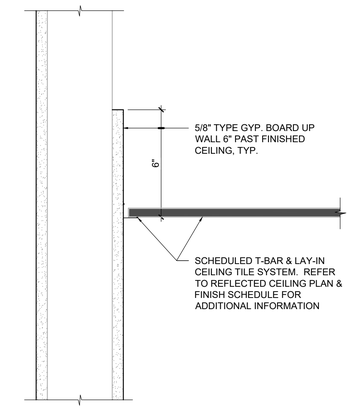

3 **SUSPENDED LAY-IN CEILING AT KITCHEN - USG #3270**

SCALE: 3"=1'-0"

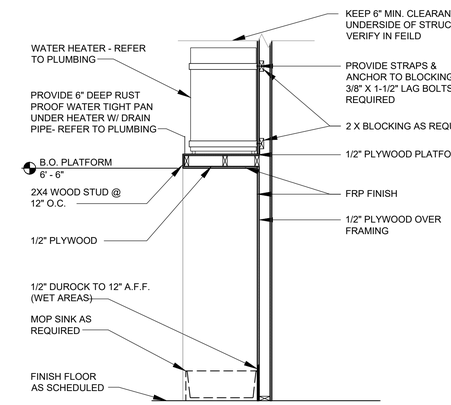

8 **WATER HEATER PLATFORM**

SCALE: 1/2"=1'-0"

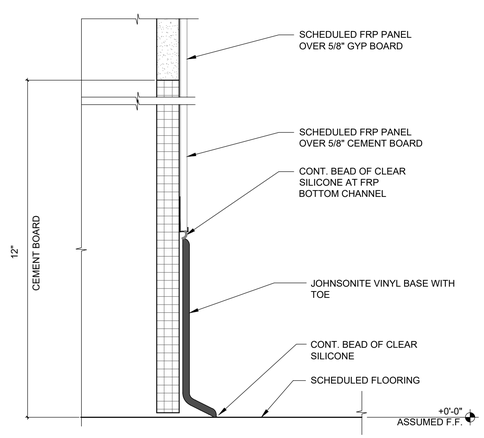

5 **GYP BOARD WITH VINYL WALL BASE AT FRP**

SCALE: 6"=1'-0"

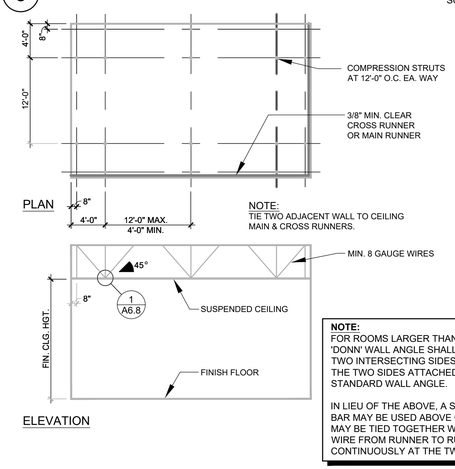

2 **TYPICAL CEILING SUSPENSION SYSTEM**

SCALE: N.T.S.

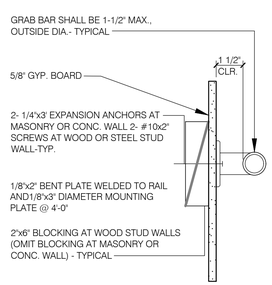

7 **GRAB BAR BLOCKING**

SCALE: 6"=1'-0"

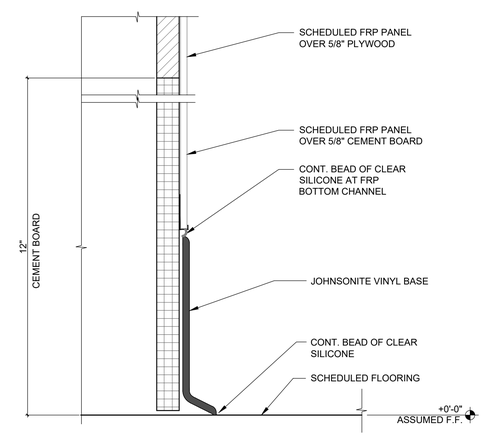

4 **PLYWOOD WITH VINYL WALL BASE AT FRP**

SCALE: 6"=1'-0"

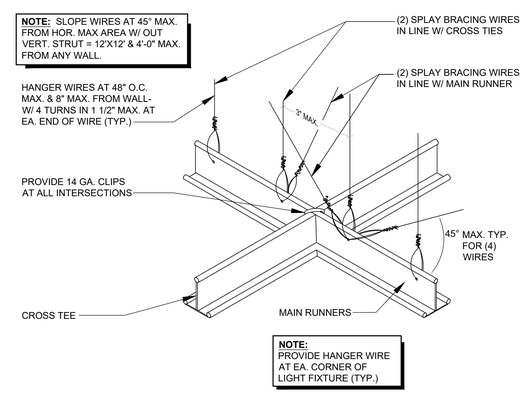

1 **SUSPENDED LAY-IN ACOUSTIC CEILING**

SCALE: N.T.S.

GHA
Architecture / Development
14901 Quorum Drive
Suite 300
Dallas Texas 75254
Ph: (972) 239-8884
Fax: (972) 239-5054

STATE OF MICHIGAN KEVIN HENDERSON ARCHITECT No. 6501054109 LICENSED ARCHITECT
12/21/2021

EST. 1998 SCOOTER'S COFFEE

PROJECT ADDRESS:
1490 WEST ANN ARBOR ROAD
PLYMOUTH, MI 48170

REVISIONS:

TITLE:
INTERIOR DETAILS

DATE:
12/21/2021

PROJECT NO.
210536

- [ ] DESIGN DEVELOPMENT
- [x] PERMIT SUBMITTAL
- [x] BID PACKAGE
- [ ] CONSTRUCTION ISSUE

SHEET NO.
A6.8

THIS DRAWING AND ITS CONTENTS ARE THE COPYRIGHTED PROPERTY OF GHA ARCHITECTS USE THEREOF IS LIMITED TO THE SPECIFIC PROJECT AND SITE SET FORTH ABOVE, AND MAY NOT BE OTHERWISE USED OR REPRODUCED, IN WHOLE OR IN PART, WITHOUT THE WRITTEN PERMISSION OF GHA ARCHITECTS, THE ARCHITECT. THIS DRAWING IS TO BE RETURNED UPON REQUEST.

THIS DRAWING AND ITS CONTENTS ARE THE COPYRIGHTED PROPERTY OF GHA ARCHITECTS. USE THEREOF IS LIMITED TO THE SPECIFIC PROJECT AND SITE SET FORTH ABOVE, AND MAY NOT BE OTHERWISE USED OR REPRODUCED, IN WHOLE OR IN PART, WITHOUT THE WRITTEN PERMISSION OF GHA ARCHITECTS. THE ARCHITECT. THIS DRAWING IS TO BE RETURNED UPON REQUEST.

EQUIPMENT SCHEDULE

ITEM / TAG	GENERAL DESCRIPTION	QTY	MANUFACTURER	MODEL #	CONTRACTOR		CLIENT / VENDOR		REMARKS	PROTO 4.0 UPDATED 6/28/21
					PROVIDE	INSTALL	PROVIDE	INSTALL		
1	BEVERAGE BLENDER	2	HARVEST ROASTING				X	X	120 V, 15 AMPS	
2	ICE MAKER	1	SCOTSMAN	C0530SA-1		X	X		GC SHALL PROVIDE WATER & DRAIN CONNECTIONS, WATER MUST BE FROM FILTERED LINE GC TO PROVIDE POWER CORD	
2.1	ICE STORAGE BIN	1	SCOTSMAN	B842S		X	X			
3	HIGH SPEED OVEN	3	MERRY CHEF	EIKON E2S			X	X	CLASSIC	
4A	U/C REFRIGERATOR (48")	1	ATOSA	MGF8402GR			X	X		
4B	U/C REFRIGERATOR (60")	2	ATOSA	MGF8403GR			X	X		
4C	U/C REFRIGERATOR (36")	N/A	TURBO-AIR	MUR-36-N6			X	X		
4E	U/C REFRIGERATOR (24")	1	PERLICK	HC24RS			X	X		
5	COFFEE GRINDER	2	BUNN	G2 HD 22102.0000			X	X	120 V 11 AMP CIRCUIT	
6	COFFEE BREWER	1	FETCO	CBS-2132XTS (E213251)			X	X	ELECTRICIAN SHALL PROVIDE RECEPTACLE AND END FOR WHIP	
7	COFFEE DISPENSER	3	FETCO	L4S-10 / D451			X	X	1 GALLON SATELLITE	
8	POS TERMINAL W/ PRINTER	2	CLOVER	CLOVER MINI			X	X	CONTRACTOR SHALL PROVIDE (2) TWO CAT5 DATA-LINES PER POS AND (1) ONE CAT5 DATA LINE AT ORDER SCREEN	
9	ESPRESSO MACHINE	3	FRANKE	S700TS			X	X	30A, 220V CIRCUITS WITH TWIST LOCK NEMA L6-30R RECEPTACLES	
10	3-COMP SINK	1	JOHN BOOS	-			X	X		
13	REACH-IN REFRIGERATOR (2 DOOR)	2	KINTERA	KBM2R			X	X		
14A	REACH-IN FREEZER (1 DOOR)	1	KINTERA	KBM1R			X	X		
14B	REACH-IN FREEZER (2 DOOR)	4	KINTERA	KBM2F			X	X		
15	SYRUP STAND	8	HARVEST ROASTING				X	X		
16	MODULAR CUP DISPENSER	1	TRIMARK				X	X		
19	BLENDER JAR RINSER	1	HAMILTON BEACH	BCR100			X	X		
20	WIRE SHELVING (ON CASTERS)	1	OLYMPIC STORAGE	CHROME FINSIH 21"x60"			X	X	VERIFY REQUIREMENTS W/ OPERATIONS	
20.1	WIRE SHELVING	2	OLYMPIC STORAGE	CHROME FINSIH 18"x36"			X	X		
20.2	WIRE SHELVING	1	OLYMPIC STORAGE	CHROME FINSIH 18"x42"			X	X		
20.3	WIRE SHELVING	1	OLYMPIC STORAGE	CHROME FINSIH 18"x48"			X	X		
21	S/S COUNTER W/ PITCHER RINSER	1	JOHN BOOS	CUSTOM FAB			X	X		
21.1	S/S COUNTER W/ DIPPER WELLS	1	JOHN BOOS	CUSTOM FAB			X	X		
21.2	S/S COUNTER W/ HAND SINK	1	JOHN BOOS	CUSTOM FAB			X	X		
23	WATER HEATER	1	SEE PLUMB. SHEETS	TBD	X	X				
24	MOP SINK	1	SEE PLUMB. SHEETS	TBD	X	X				
25	WATER TREATMENT SYSTEM	1	OPTIPURE	BWS350		X	X		PROCESSOR 120V 6W	
25A	WATER STORAGE TANK & PUMP	1	OPTIPURE	50 GALLON		X	X		REPRESSURIZATION PUMP 120V 2A	
26	ZOOM TIMER	1	HM ELECTRONICS	NITRO		X	X			
27	BUILT-IN DIPPER WELL W/ FAUCET	2	FISHER	3041		X	X			
28	BUILT-IN FROTHING CUP RINSIER	2	ESPESSO PARTS	EPPR662		X	X			
29	WALL MOUNT WIRE SHELVING	1	OLYMPIC CHROME	18"x72"			X	X	PROVIDE EACH UNIT W/ WALL BRACKET HARDWARE	
29A	WALL MOUNT WIRE SHELVING	4	OLYMPIC CHROME	18"x60"			X	X	PROVIDE EACH UNIT W/ WALL BRACKET HARDWARE	
29B	WALL MOUNT WIRE SHELVING	3	OLYMPIC CHROME	14"x60"			X	X	PROVIDE EACH UNIT W/ WALL BRACKET HARDWARE	
29C	WALL MOUNT WIRE SHELVING	4	OLYMPIC CHROME	18"x48"			X	X	PROVIDE EACH UNIT W/ WALL BRACKET HARDWARE	
29D	WALL MOUNT WIRE SHELVING	2	OLYMPIC CHROME	14"x48"			X	X	PROVIDE EACH UNIT W/ WALL BRACKET HARDWARE	
29E	WALL MOUNT WIRE SHELVING	3	OLYMPIC CHROME	18"x36"			X	X	PROVIDE EACH UNIT W/ WALL BRACKET HARDWARE	
29F	WALL MOUNT WIRE SHELVING	1	OLYMPIC CHROME	14"x36"			X	X	PROVIDE EACH UNIT W/ WALL BRACKET HARDWARE	
29G	WALL MOUNT WIRE SHELVING	2	OLYMPIC CHROME	14"x24"			X	X	PROVIDE EACH UNIT W/ WALL BRACKET HARDWARE	
29H	SMART WALL	1	METRO METROSEAL	60"			X	X	PROVIDE EACH UNIT W/ WALL BRACKET HARDWARE	
29J	SMART WALL	2	METRO METROSEAL	36"			X	X	PROVIDE EACH UNIT W/ WALL BRACKET HARDWARE	
30	DRIVE-THRU ORDER MONITOR	2	32" FLAT TV			X	X			
31	DECK MOUNT SINGLE FAUCET	1	T&S BRASS	B-0207		X	X		FOR BLENDER PITCHER RINSER	
32	WALL MOUNT HAND SINK	1	ADVANCE TABCO	7-PS-EC-SP-1X		X	X			
34	SOAP DISPENSER	1			X	X			SURFACE MOUNTED	
35	PAPER TOWEL DISPENSER	1			X	X			SURFACE MOUNTED	
36	MOP & BROOM RACK	1			X	X			SURFACE MOUNTED	
37	TRASH RECEPTACLE	5	TRIMARK			X	X			
38	FIRE EXTINGUISHER	1	AMEREX	2A:10B:C	X	X			SUPPLIED WITH WALL MOUNT HOOK BRACKET 888-16591	
39	EMPLOYEE LOCKERS	1	TRIMARK	DDB402			X	X	12X12X12 6 TIER G.C. TO ANCHOR TO WALL	
43	MOBILE ICE STORAGE BIN	3	CAMBRO	ICS100L110			X	X		
44	SAFE	1				X	X		BOLTED TO FLOOR BY G.C.	
45	WALL CORNER GUARD	10				X	X			

GENERAL NOTES:

1. ALL MILLWORK/STAINLESS STEEL COUNTERS/ WIRE SHELVES TO BE PROVIDED AND INSTALLED BY CONCEPT SERVICES, UNLESS OTHERWISE NOTED
2. THE WATER FILTRATION SYSTEM IS TYPICALLY TO BE INSTALLED IN BACK-OF-HOUSE AREA
3. THE REVERSE OSMOSIS SYSTEM IS TO BE INSTALLED NEXT TO THE WATER FILTRATION SYSTEM
4. G.C. TO INSTALL 12"W X 12"L X 12"D CONC. SLAB TO ACCEPT COMMUNICATION POST (PROVIDED BY OTHERS) - CONC. SLAB TO BE PLACED FROM FACE OF CURB IN LOCATION NOTED ON SCHEMATIC DRIVE-THRU MENU-BOARD & SPEAKER/INTERCOM PLAN - CONC. SLAB TO INCLUDE 2 BLANK CONDUITS LOCATED IN THE CENTER OF THE SLAB - ONE OF THESE CONDUITS TO BE RAN FROM THE CENTER OF SLAB TO INSIDE THE BUILDING TO THE LOCATION NEAR THE ELECTRICAL PANEL - THE OTHER CONDUIT WILL BE RAN FROM THE CENTER OF SLAB & CONNECTED TO THE UNDERGROUND LOOP SENSOR (PROVIDED BY OTHERS) IN DRIVE THRU LANE - NOTE: MENU BOARD LOCATION; PROVIDE A CONDUIT WITH POWER RAN TO THE OUTSIDE MENU BOARD LOCATION NOTED ON PLAN.
5. GC WILL NEED TO COORDINATE WITH COUNTERTOP FAB FOR PROPER LOCATION OF COUNTERTOP LEGS WITH FLOOR SINK LOCATION.

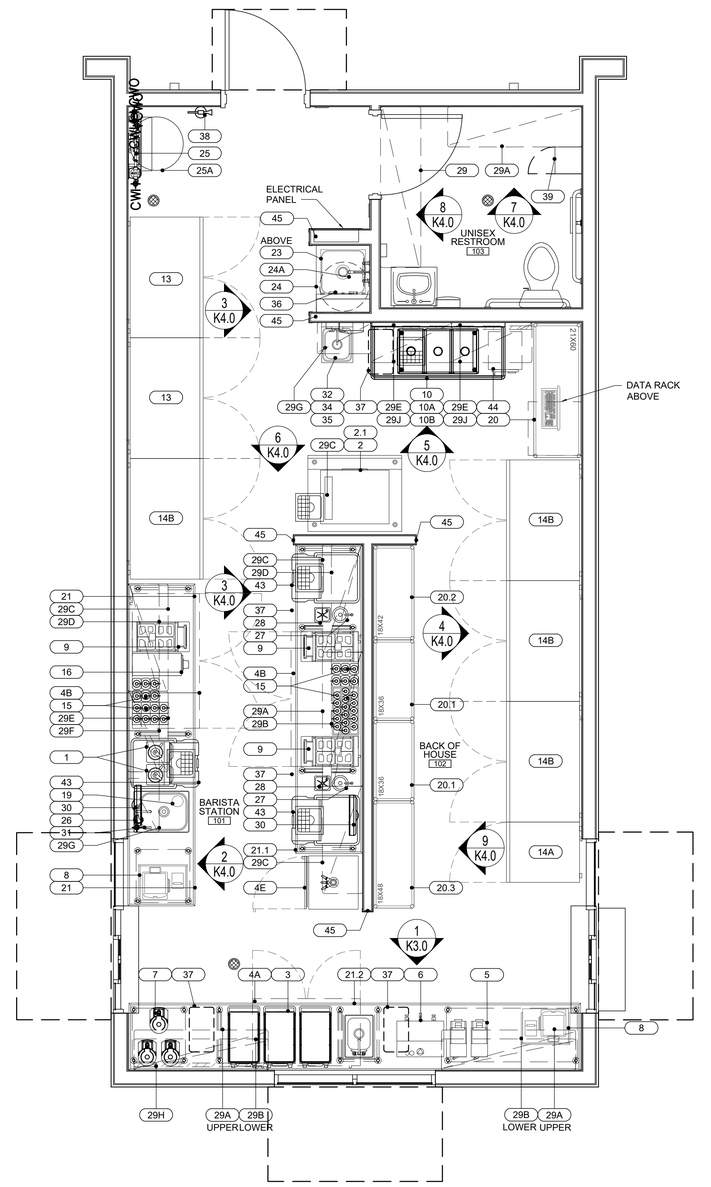

1 EQUIPMENT PLAN

SCALE: 3/8" = 1'-0"

GHA
Architecture / Development
14901 Quorum Drive
Suite 300
Dallas Texas 75254
Ph: (972) 239-8884
Fax: (972) 239-5054

STATE OF MICHIGAN KEVIN HENDERSON ARCHITECT No. 1301058109 LICENSED ARCHITECT
12/21/2021

EST. 1998 SCOOTER'S COFFEE

PROJECT ADDRESS:
1490 WEST ANN ARBOR ROAD
PLYMOUTH, MI 48170

REVISIONS:

TITLE:
EQUIPMENT PLAN & SCHEDULE

DATE:
12/21/2021

PROJECT NO.
210536

- [ ] DESIGN DEVELOPMENT
- [x] PERMIT SUBMITTAL
- [x] BID PACKAGE
- [ ] CONSTRUCTION ISSUE

SHEET NO.
K1.0

THIS DRAWING AND ITS CONTENTS ARE THE COPYRIGHTED PROPERTY OF GHA ARCHITECTS. USE THEREOF IS LIMITED TO THE SPECIFIC PROJECT AND SITE SET FORTH ABOVE, AND MAY NOT BE OTHERWISE USED OR REPRODUCED, IN WHOLE OR IN PART, WITHOUT THE WRITTEN PERMISSION OF GHA ARCHITECTS, THE ARCHITECT. THIS DRAWING IS TO BE RETURNED UPON REQUEST.

PLUMBING ROUGH-IN NOTES:

1. ALL CONNECTIONS SHOWN ARE RELATIVE TO FOOD SERVICE EQUIPMENT ONLY.
2. THIS PLAN IS INTENDED TO SHOW EQUIPMENT PLUMBING REQUIREMENTS AND ROUGH-IN HEIGHTS ONLY.
3. GENERAL WATER PRESSURE IN KITCHEN AREA IS NOT TO EXCEED 50 PSI. PLUMBING CONTRACTOR SHALL FURNISH AND INSTALL PRESSURE REDUCING VALVES, FLOW CONTROLS, BACK FLOW PREVENTION, WATER HAMMER ARRESTOR, GATE VALVES, FOR WATER CONNECTIONS AS REQUIRED PER LOCAL CODES. NOTE: BOOSTER DISHMACHINES REQUIRE FLOW PRESSURE OF (20-25 PSI) OR AS SPECIFIED BY MANUFACTURER FOR PROPER INSTALLATION.
4. PLUMBING CONTRACTOR SHALL PROVIDE ALL ROUGH-IN AND FINAL CONNECTIONS TO ALL FOOD SERVICE FACILITIES EQUIPMENT. ALL WORK TO BE IN ACCORDANCE WITH ALL NATIONAL, STATE AND LOCAL CODES AS REQUIRED.
5. KITCHEN EQUIPMENT CONTRACTOR SHALL PROVIDE ALL FAUCETS AND DRAINS AS SPECIFIED. PLUMBING CONTRACTOR SHALL INSTALL AND CONNECT ALL FAUCETS WITH THE NECESSARY COMPONENTS TO MAKE FINAL CONNECTIONS PER LOCAL CODES.
6. WHEN ROUGH-IN IS OUT OF WALL, THIS INDICATES CONCEALED LINES, DO NOT RUN ANY EXPOSED LINES WHERE POSSIBLE.
7. ALL DIMENSIONS ARE TAKEN FROM FINISHED FLOORS AND FINISHED WALLS OR AS NOTED ON PLAN AND ARE BASED ON ARCHITECTURAL BACKGROUND AND OVERALL DIMENSIONS.
8. GENERAL GAS PRESSURE IN KITCHEN IS TO BE VERIFIED BY THE PLUMBING CONTRACTOR, THE PLUMBING CONTRACTOR IS REQUIRED TO FURNISH AND INSTALL GAS PRESSURE REDUCING VALVE(S) FOR ALL FOOD SERVICE EQUIPMENT AS APPLICABLE, FOR GAS PRESSURES INDICATED BY MANUFACTURER'S SPECIFIED WATER COLUMN (WC) SECONDLY, PLUMBING CONTRACTOR IS TO FURNISH AND INSTALL GAS SHUT OFF VALVE(S) AT POINT OF CONNECTION WITH EQUIPMENT AND INSTALL QUICK DISCONNECT GAS HOSE IF APPLICABLE.
9. WATER COOLED REFRIGERATION SYSTEMS ARE TO BE PROVIDED WITH A MINIMUM OF 1.5 GPM OF WATER SUPPLY AT 70 DEGREES F PER HORSEPOWER AND A MAXIMUM OF 200 CFM OF AIR EXCHANGE PER 12,000 BTU 8 TO 10 TIMES PER HOUR.
10. ANY AND ALL EXPOSED PIPING OF FITTINGS TO BE STAINLESS STEEL, CHROME PLATED OR ENCLOSED IN A STAINLESS STEEL CONCEALED, MOUNTED CHASE, OR AS SPECIFIED BY KITCHEN EQUIPMENT CONTRACTOR.
11. PLUMBING CONTRACTOR SHALL PROVIDE ALL STEAM AND CONDENSATE PIPING, AND SHALL INCLUDE PRESSURE REDUCING VALVES, STEAM TRAPS, SAFETY VALVES, SHUT-OFF VALVES, STRAINERS AS REQUIRED PER MANUFACTURER FOR PROPER INSTALLATION AND PER CODES APPLICABLE.
12. THE KITCHEN EQUIPMENT CONTRACTOR SHALL PROVIDE THE PRE-ASSEMBLED REMOTE REFRIGERATION COMPRESSOR'S) WITHOUT LINES AND REFRIGERANT, H.V.A.C. CONTRACTOR SHALL INSTALL, CONNECT AND CHARGE REFRIGERATION LINE SYSTEM'S), RUN AND CHECK FOR PROPER OPERATION UNLESS NOTED OTHERWISE.
13. PLUMBING CONTRACTOR SHALL FURNISH AND INSTALL 6" / 8" PVC CONDUIT FOR REMOTE SODA, BEER, OR LIQUOR DISPENSING SYSTEMS. PROVIDE 6" / 8" PVC CONDUIT AS INDICATED, WITH 24" MINIMUM SWEEPING BENDS.

ALL HAND WASHING SINKS SHALL BE OUTFITTED W/ OWNER FURNISHED WALL MOUNT SOAP & TOWEL DISPENSERS. DISPENSERS SHALL BE PROVIDED TO GENERAL CONTRACTOR PRIOR TO HEALTH DEPARTMENT INSPECTION.

ALL DIMENSIONED ROUGH-INS ARE BASED OFF OF SUPPLIED ARCHITECTURAL BACKGROUND. PLEASE CONFIRM ACTUAL SITE DIMENSIONS AS THIS WILL EFFECT FINAL LOCATIONS.

DIRECT ALL INDIRECT WASTES INTO FLOOR SINKS & FLOOR DRAINS PER LOCAL CODES. PLUMBING CONTRACTOR TO VERIFY THAT ALL FLOOR SINKS, FLOOR DRAINS, AND PLUMBING WASTES CONFORM TO LOCAL CODES.

GENERAL CONTRACTOR IS RESPONSIBLE FOR ALL CORE DRILLING, ROOF PENETRATIONS, FLOOR CUTTING AND PATCHING FOR ALL BEER LINES, SODA LINES, REMOTE REFRIGERATION AND EXHAUST SYSTEMS.

PLUMBING ABBREVIATIONS

DIAM.	DIAMETER
C.W.	COLD WATER
H.W.	HOT WATER
W	WASTE
I.W.	INDIRECT WASTE
F.D.	FLOOR DRAIN
F.S.	FLOOR SINK
C.O.	CLEAN OUT
GAS	NATURAL & PROPANE
G.T.	GREASE TRAP
+DIM	HEIGHT TO CENTER LINE ABOVE FINISHED FLOOR

PLUMBING SYMBOLS

- GAS SUPPLY (NG/LP)
- WATER SUPPLY
- CONNECTION POINT
- WASTE THRU FLOOR
- FLOOR DRAIN
- SQUARE FLOOR SINK WITH 1/2 REMOVABLE COVER
- SQUARE FLOOR SINK WITH 3/4 REMOVABLE COVER
- SQUARE FLOOR SINK WITH FULL REMOVABLE COVER
- ROUND FLOOR SINK WITH 3/4 REMOVABLE COVER

PLUMBING ROUGH-IN NOTES

1. REQUIREMENTS SHOWN ARE FOR FOOD SERVICE EQUIPMENT ONLY. REFER TO PLUMBING PLANS FOR ADDITIONAL REQUIREMENTS.
2. SEE EQUIPMENT PLAN & SCHEDULE FOR ADDITIONAL INFORMATION.
3. THE P.C. SHALL PROVIDE ALL ROUGH-IN'S & FINAL CONNECTIONS REQUIRED.
4. DOT REPRESENTS ROUGH-IN LOCATION
   DOTTED LINE REPRESENTS FINAL CONNECTION *
   CIRCLE REPRESENTS CONNECTION ON EQUIPMENT *

* FINAL CONNECTION AND CONNECTION ON EQUIPMENT ARE SCHEMATIC ONLY. (NO ATTEMPT HAS BEEN MADE TO LOCATE THEM DIMENSIONALLY).

PLUMBING ROUGH-IN SCHEDULE

ITEM NO	QTY	EQUIPMENT CATEGORY	COLD WATER SIZE (IN)	COLD WATER AFF (IN)	HOT WATER SIZE (IN)	HOT WATER AFF (IN)	DIRECT WASTE SIZE (IN)	DIRECT WASTE AFF (IN)	INDIRECT WASTE SIZE (IN)	PLUMBING REMARKS
2	1	ICE MAKER	0.375	60					0.75	INDIRECT WASTE TO FLOOR SINK
2.1	1	ICE STORAGE BIN							1	INDIRECT WASTE TO FLOOR SINK
6	1	COFFEE BREWER	0.375	48						
9	3	ESPRESSO MACHINE	0.375	48					0.375	INDIRECT WASTE TO FLOOR SINK
10	1	3-COMP SINK	0.5	12	0.5	12			2	INDIRECT WASTE TO FLOOR SINK
19	1	PITCHER RINSER	5/8"							HOSE TYPE CONNECTION TO ITEM #31
21	1	S/S COUNTER W/ PITCHER RINSER	0.5	12	0.5	12			1.5	INDIRECT WASTE TO FLOOR SINK
21.1	1	S/S COUNTER W/ DIPPER WELLS							2	INDIRECT WASTE TO FLOOR SINK
21.2	1	S/S COUNTER W/ HAND SINK	0.5	12	0.5	12	1.5	18		
24	1	MOP SINK	0.5	42	0.5	42	2			WASTE THRU FLOOR
25	1	WATER TREATMENT SYSTEM	0.375	72						
25A	1	WATER STORAGE TANK & PUMP	0.375	72						
27	1	BUILT-IN DIPPER WELL W/ FAUCET	0.375	22					1.5	INDIRECT WASTE TO FLOOR SINK
28	1	BUILT-IN FROTHING CUP RINSIER	0.5	22					0.5	INDIRECT WASTE TO FLOOR SINK
31	1	DECK MOUNT SINGLE FAUCET			0.5	22				
32	1	WALL MOUNT HAND SINK	0.5	22	0.5	22	1.5	18		
43	3	MOBILE ICE STORAGE BIN							.5	INDIRECT WASTE TO FLOOR SINK

NOTE: FLOOR SINKS DIMENSION ARE NOT DEAD SET, THEY WILL NEED TO BE LOCATED +6" OR MORE. GC WILL NEED TO COORDINATE WITH COUNTERTOP FAB FOR PROPER LOCATION OF COUNTERTOP LEGS WITH FLOOR SINK LOCATION.

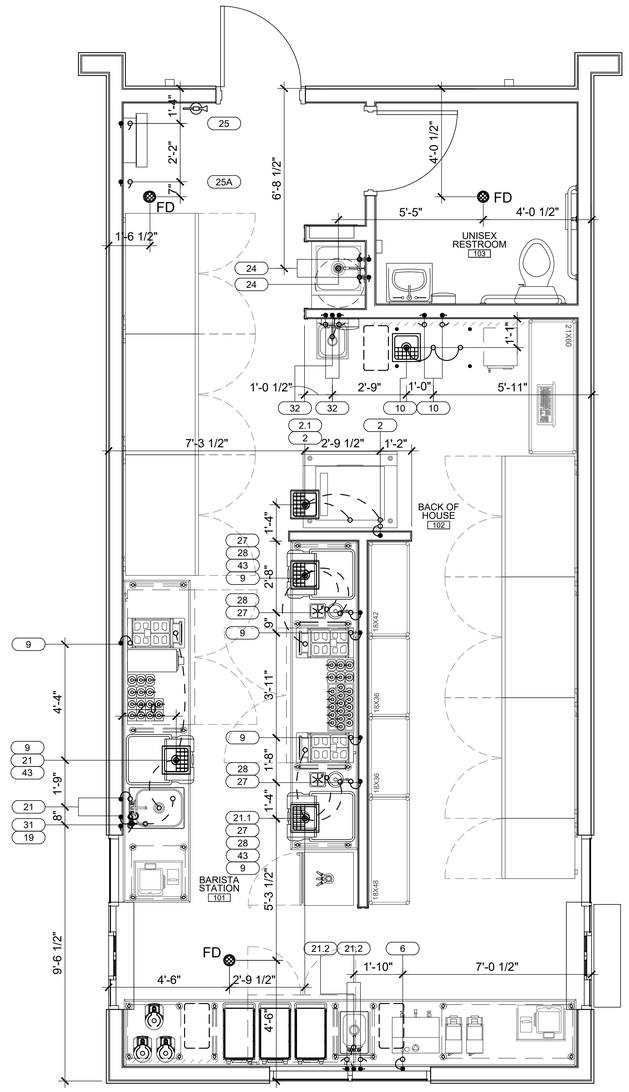

1 PLUMBING ROUGH-IN PLAN

SCALE: 3/8" = 1'-0"

NORTH

GHA
Architecture / Development
14901 Quorum Drive
Suite 300
Dallas Texas 75254
Ph: (972) 239-8884
Fax: (972) 239-5054

STATE OF MICHIGAN
KEVIN HENDERSON
ARCHITECT
No. 4001058109
LICENSED ARCHITECT
12/21/2021

EST. 1998
SCOOTER'S COFFEE

PROJECT ADDRESS:
1490 WEST ANN ARBOR ROAD
PLYMOUTH, MI 48170

REVISIONS:

TITLE:
EQUIPMENT PLUMBING ROUGH-IN PLAN & NOTES

DATE:
12/21/2021

PROJECT NO.
210536

- [ ] DESIGN DEVELOPMENT
- [x] PERMIT SUBMITTAL
- [x] BID PACKAGE
- [ ] CONSTRUCTION ISSUE

SHEET NO.
K2.0

THIS DRAWING AND ITS CONTENTS ARE THE COPYRIGHTED PROPERTY OF GHA ARCHITECTS USE THEREOF IS LIMITED TO THE SPECIFIC PROJECT AND SITE SET FORTH ABOVE, AND MAY NOT BE OTHERWISE USED OR REPRODUCED, IN WHOLE OR IN PART, WITHOUT THE WRITTEN PERMISSION OF GHA ARCHITECTS, THE ARCHITECT. THIS DRAWING IS TO BE RETURNED UPON REQUEST.

ELECTRICAL ROUGH-IN NOTES:

1. ALL FINAL CONNECTIONS SHOWN ON THIS DRAWING ARE ACTUAL REQUIREMENTS OF THE EQUIPMENT ARE SHOWN IN THEIR APPROXIMATE LOCATION.
2. LOCATION OF ROUGH-IN STUB IS INDICATED AT +DIMENSION, WHICH IS THE STUB-OUT ABOVE THE FINISHED FLOOR.
3. All DIMENSIONS ARE FROM AN ESTABLISHED BUILDING COLUMN LINE OR WALL AS INDICATED.
4. NUMBER NOT USED.
5. ELECTRICAL CONTRACTOR TO PROVIDE AND INSTALL ALL SWITCHES, STARTERS, DISCONNECTS, ETC. FOR ALL EQUIPMENT AND ICE MACHINES UNLESS NOTED OTHERWISE, ALL DISCONNECTS OR LOCK-OUT DEVICES, STARTERS, ETC. TO MEET N.E.C. AND O.S.H.A. STANDARDS.
6. ELECTRICAL CONTRACTOR TO PROVIDE CONTROL WIRING AND ELECTRICAL SERVICE FOR ALL REMOTE REFRIGERATION SYSTEMS. ALSO COORDINATE LOCATION FOR SERVICE WITH ELECTRICAL ENGINEER.
7. ELECTRICAL CONTRACTOR TO PROVIDE WRAP AROUND HEATER CABLE ON ALL EVAPORATOR DRAIN LINES IN WALK-IN FREEZER.
8. ELECTRICAL CONTRACTOR TO INSTALL AND WIRE EXTRA LIGHTS IN WALK-IN COOLERS AND FREEZERS AS REQUIRED, THRU DOOR SWITCH.
9. ELECTRICIAN TO BRANCH TO CONNECTION WHERE REQUIRED AND TO CONNECT ALL ELECTRICAL EQUIPMENT AND FIXTURES AND ICE MACHINES. ALSO DO ANY INTERNAL WIRING REQUIRED IN THE FIXTURES INCLUDING INTER-WIRING TO APPLIANCES AS REQUIRED BY THE SPECIFICATIONS AND/ OR DRAWINGS.
10. ALL ELECTRICAL OUTLET COVER PLATES ARE TO BE STAINLESS STEEL. THOSE REQUIRED IN BUILDING STRUCTURE ARE TO BE FURNISHED BY THE ELECTRICIAN. WITH RECEPTACLE. ALL MAIN BREAKER PANELS AND DISCONNECT SWITCHES REQUIRED BY OTHER ELECTRICAL DRAWINGS ARE TO BE FURNISHED AND INSTALLED BY THE ELECTRICAL CONTRACTOR AT TIME OF INSTALLATION.
11. IF ELECTRICAL COOKING EQUIPMENT IS SPECIFIED, ELECTRICAL CONTRACTOR TO PROVIDE TIE-IN WIRING BETWEEN FIRE PROTECTION BOTTLE CONTROL HEAD, MICRO-SWITCH AND COOKING EQUIPMENT TO COMPLY WITH APPLICABLE LOCAL CODE REQUIREMENTS FOR EMERGENCY SHUTDOWN OF ENTIRE COOKLINE. SHUNT TRIP CIRCUITRY MAY BE REQUIRED, SEE OTHER ELECTRICAL PLANS.
12. VERIFY WITH ARCHITECT OR OWNER'S REPRESENTATIVE, FINAL EQUIPMENT REQUIREMENTS BEFORE ORDERING MATERIAL. REVISIONS TO EQUIPMENT OR PERFORMANCE REQUIREMENTS MAY AFFECT THE ELECTRICIANS WORK.
13. ALL WORK, RELATING TO THE INSTALLATION AND HOOKUP OF THE SPECIFIED EQUIPMENT, IS TO BE PERFORMED IN FULL ACCORDANCE WITH APPLICABLE LOCAL, CITY, COUNTY, STATE AND FEDERAL CODES AND ALL OTHER GOVERNMENTAL REGULATORY REQUIREMENTS.
14. ELECTRICAL CONTRACTOR IS REQUIRED TO FURNISH AND INSTALL ALL ELECTRICAL COMPONENTS NECESSARY TO PROVIDE SERVICE TO LOCATIONS AND EQUIPMENT AS SHOWN ON THIS SHEET UNLESS NOTED OTHERWISE. ELECTRICAL CONTRACTOR IS ALSO RESPONSIBLE FOR MAKING FINAL CONNECTIONS TO EQUIPMENT AND FITTINGS SUPPLIED AND INSTALLED BY FSEC.
15. ALL ROUGH-IN'S SHOWN AT WALL LOCATIONS ARE TO BE LOCATED WITHIN INTERIOR OF WALL. COORDINATE WITH ARCHITECTURAL PLANS FOR ADDITIONAL FLOOR PLAN & BASE BUILDING ELECTRICAL REQUIREMENTS.

ELECTRICAL CONTRACTOR TO PROVIDE CONDUIT, J BOXES AND STUB-INS FOR ALL DATA LINES TO AND FROM COMPUTERS, P.O.S. SYSTEM AND PRINTERS. PLEASE VERIFY ELECTRICAL REQUIREMENTS FROM P.O.S. PROVIDER.

ELECTRICAL CONTRACTOR TO INSTALL CONVENIENCE OUTLETS IN OFFICE AND OTHER OWNER AND ARCHITECT SPECIFIED AREAS.

ALL DIMENSIONED ROUGH-INS ARE BASED OFF OF SUPPLIED ARCHITECTURAL BACKGROUND. PLEASE CONFIRM ACTUAL SITE DIMENSIONS AS THIS WILL EFFECT FINAL LOCATIONS.

DIRECT ALL INDIRECT WASTES INTO FLOOR SINKS & FLOOR DRAINS PER LOCAL CODES. PLUMBING CONTRACTOR TO VERIFY THAT ALL FLOOR SINKS, FLOOR DRAINS, AND PLUMBING WASTES CONFORM TO LOCAL CODES.

GENERAL CONTRACTOR IS RESPONSIBLE FOR ALL CORE DRILLING, ROOF PENETRATIONS, FLOOR CUTTING AND PATCHING FOR ALL BEER LINES, SODA LINES, REMOTE REFRIGERATION AND EXHAUST SYSTEMS.

ELECTRICAL ABBREVIATIONS

A.F.F.	ABOVE FINISH FLOOR
B.F.F.	BELOW FINISH FLOOR
S.U.	STUB UP FROM FLOOR
D.F.A.	DOWN FROM ABOVE
A	AMPS
V	VOLTS
PH. (ϕ)	PHASE
PWR	POWER
J.B.	JUNCTION BOX
CONN.	CONNECTION
D.R.	DUPLEX RECEPTACLE
D.C.O.	DUPLEX CONVENIENCE OUTLET
Q.R.	QUAD RECEPTACLE
S.R.	SINGLE RECEPTACLE
KW.	KILOWATT
H.P.	HORSEPOWER
+DIM	HEIGHT TO CENTER LINE OF OUTLET BOX ABOVE FINISHED FLOOR

ELECTRICAL SYMBOLS

- JUNCTION BOX SINGLE OR MULTI-GANG
- DUPLEX RECEPTACLE SCHEDULED OR CONVENIENCE
- QUAD RECEPTACLE SCHEDULED OR CONVENIENCE
- SINGLE RECEPTACLE VOLTAGE & PHASE VARIES
- SWITCH LIGHT SWITCH OR PULL STATION
- EXHAUST HOOD LIGHT FIXTURE VAPOR PROOF LED OR CFL
- WALK-IN LIGHT FIXTURE VAPOR PROOF LED OR CFL
- PANEL BOARD OR LOAD CENTER

ELECTRICAL ROUGH-IN NOTES

1. REQUIREMENTS SHOWN ARE FOR FOOD SERVICE EQUIPMENT ONLY. REFER TO ELECTRICAL PLANS FOR ADDITIONAL REQUIREMENTS.
2. SEE EQUIPMENT PLAN & SCHEDULE FOR ADDITIONAL INFORMATION.
3. THE E.C. SHALL PROVIDE ALL ROUGH-IN'S & FINAL CONNECTIONS REQUIRED.
4. DOT REPRESENTS ROUGH-IN LOCATION
   DOTTED LINE REPRESENTS FINAL CONNECTION *
   SQUARE REPRESENTS CONNECTION ON EQUIPMENT *

* FINAL CONNECTION AND CONNECTION ON EQUIPMENT ARE SCHEMATIC ONLY. (NO ATTEMPT HAS BEEN MADE TO LOCATE THEM DIMENSIONALLY).

ELECTRICAL ROUGH-IN SCHEDULE

ITEM NO	QTY	EQUIPMENT CATEGORY	AMPS	KW	HP	VOLTS	PHASE	CYCLE	DIRECT	PLUG	NEMA	ELECTRICAL AFF (IN)	ELECTRICAL REMARKS
1	2	BEVERAGE BLENDER	13.0			120	1	60		X		48	EC TO PROVIDE CORD & PLUG
2	1	ICE MAKER	11.4			115	1	60	X			60	
3	3	HIGH SPEED OVEN	16.0	3.7		230	1	50		X		48	EC TO PROVIDE CORD & PLUG
4A	1	U/C REFRIGERATOR (48")	3.0	0.6	0.2	115	1	60		X	5-15P	18	
4B	2	U/C REFRIGERATOR (60")	6.6		0.2	115	1	60		X	5-15P	18	
4C	N/A	U/C REFRIGERATOR (36")	6.6		0.2	115	1	60		X	5-15P	18	
4E	1	U/C REFRIGERATOR (24")	2.3		0.2	115	1	60		X	5-15P	18	
5	2	COFFEE GRINDER	11.0		0.8	120	1	60		X	5-15P	30	
6	1	COFFEE BREWER	23.7	5.2		120/220	1	60		X		30	EC TO PROVIDE CORD & PLUG
8	2	POS TERMINAL W/ PRINTER	15.0			120	1	60		X	5-15P	30	DEDICATED CIRCUIT
9	3	ESPRESSO MACHINE	30.0	6.2		208	1	60		X		48	EC TO PROVIDE CORD & PLUG
13	2	REACH-IN REFRIGERATOR (2 DOOR)	5.4	1.1	0.5	115	1	60		X	5-15P	48	
14A	1	REACH-IN FREEZER (1 DOOR)	9.6	1.1	1.0	115	1	60		X	5-15P	48	
14B	4	REACH-IN FREEZER (2 DOOR)	9.6	1.1	1.0	115	1	60		X	5-15P	48	
25	1	WATER TREATMENT SYSTEM				120	1	60		X	5-15P	84	
25A	1	WATER STORAGE TANK & PUMP	2.0			120	1	60		X	5-15P	84	
26	1	ZOOM TIMER	2.5			120	1	60		X	5-15P	84	
30	2	DRIVE-THRU ORDER MONITOR	15.0			120	1	60		X	5-15P	72	DEDICATED CIRCUIT
A	5	CONVENIENCE OUTLET (+48" AFF)	15.0			120	1	60		X	5-15P	48	MOUNT HORIZONTALLY AS NEEDED
B	2	CONVENIENCE OUTLET (+18" AFF)	15.0			120	1	60		X	5-15P	108	MOUNT HORIZONTALLY AS NEEDED
C	2	CONVENIENCE OUTLET (+42" AFF)	15.0			120	1	60		X	5-15P	42	MOUNT HORIZONTALLY AS NEEDED

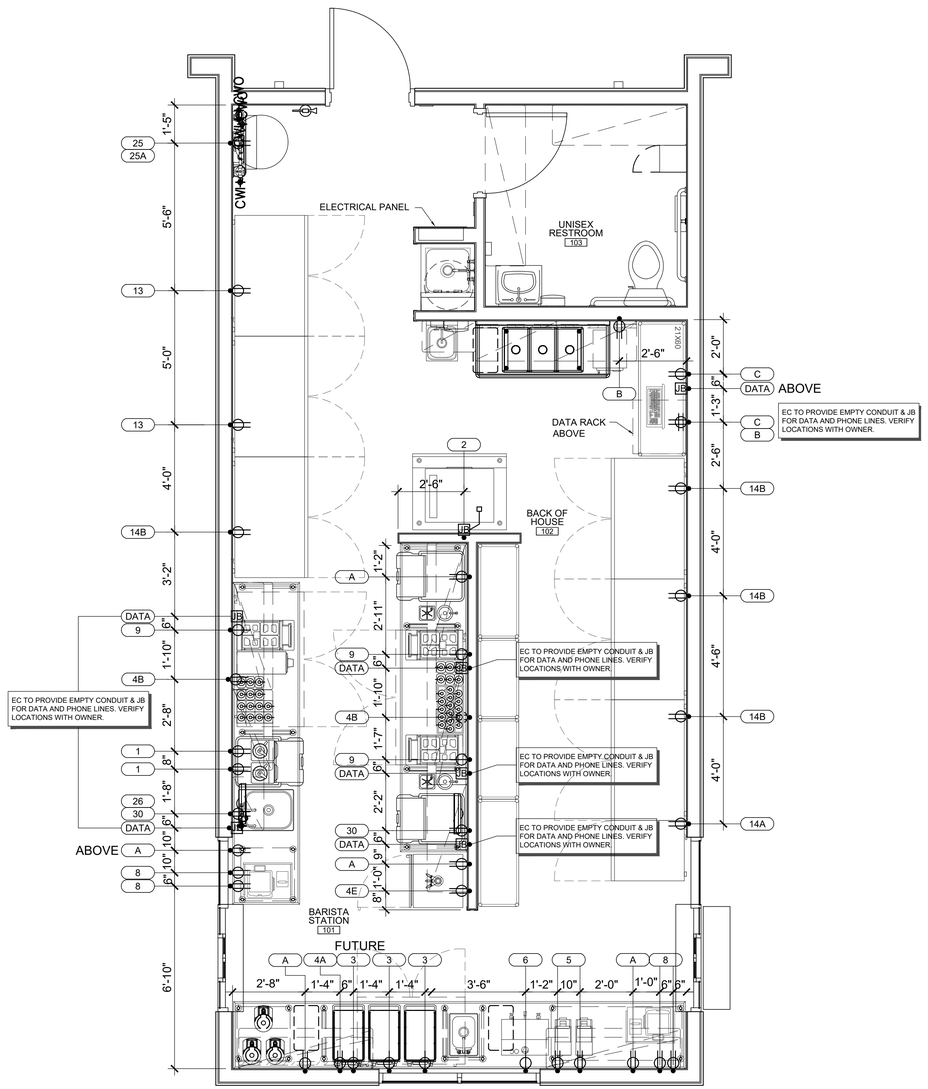

1 ELECTRICAL ROUGH-IN PLAN

SCALE: 3/8" = 1'-0"

NORTH

GHA
Architecture / Development
14901 Quorum Drive
Suite 300
Dallas Texas 75254
Ph: (972) 239-8884
Fax: (972) 239-5054

STATE OF MICHIGAN KEVIN HENDERSON ARCHITECT No. 4301058108 LICENSED ARCHITECT
12/21/2021

EST. 1998 SCOOTER'S COFFEE

PROJECT ADDRESS:
1490 WEST ANN ARBOR ROAD
PLYMOUTH, MI 48170

REVISIONS:

TITLE:
EQUIPMENT ELECTRICAL ROUGH-IN PLAN & NOTES

DATE:
12/21/2021

PROJECT NO.
210536

- [ ] DESIGN DEVELOPMENT
- [x] PERMIT SUBMITTAL
- [x] BID PACKAGE
- [ ] CONSTRUCTION ISSUE

SHEET NO.
K3.0

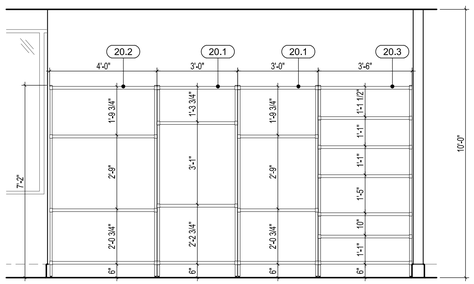

9 EQUIPMENT ELEVATION

SCALE: 3/8" = 1'-0"

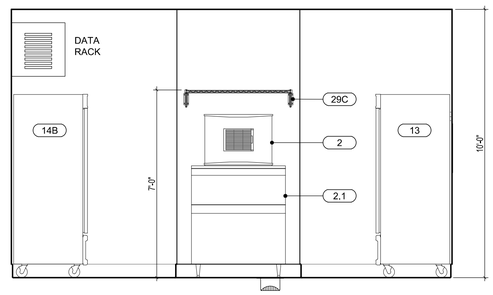

6 EQUIPMENT ELEVATION

SCALE: 3/8" = 1'-0"

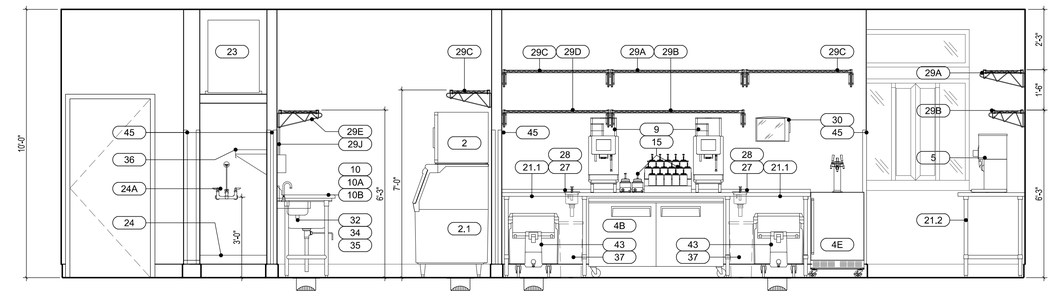

3 EQUIPMENT ELEVATION

SCALE: 3/8" = 1'-0"

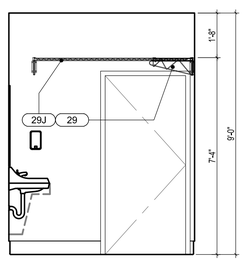

8 EQUIPMENT ELEVATION

SCALE: 3/8" = 1'-0"

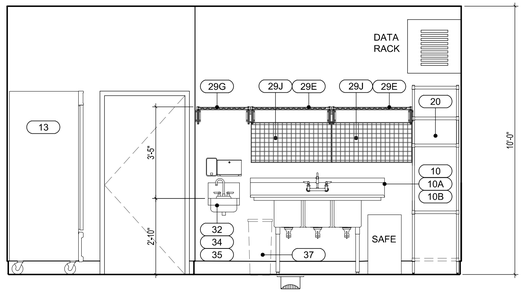

5 EQUIPMENT ELEVATION

SCALE: 3/8" = 1'-0"

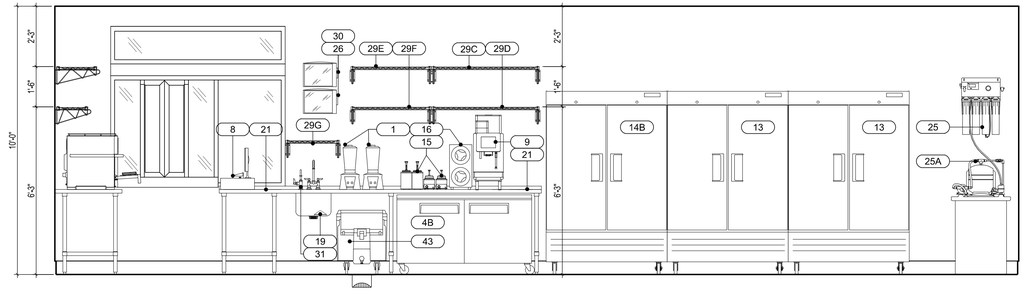

2 EQUIPMENT ELEVATION

SCALE: 3/8" = 1'-0"

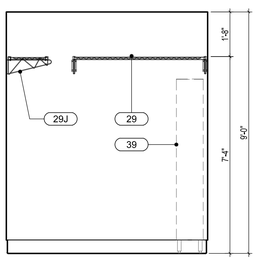

7 EQUIPMENT ELEVATION

SCALE: 3/8" = 1'-0"

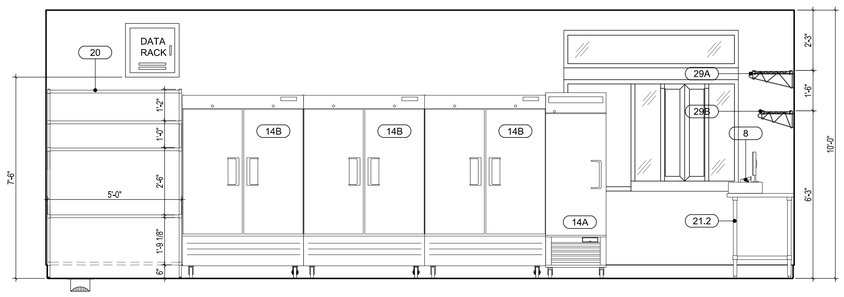

4 EQUIPMENT ELEVATION

SCALE: 3/8" = 1'-0"

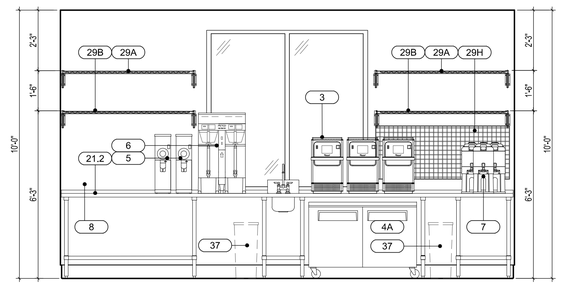

1 EQUIPMENT ELEVATION

SCALE: 3/8" = 1'-0"

THIS DRAWING AND ITS CONTENTS ARE THE COPYRIGHTED PROPERTY OF GHA ARCHITECTS. USE THEREOF IS LIMITED TO THE SPECIFIC PROJECT AND SITE SET FORTH ABOVE, AND MAY NOT BE OTHERWISE USED OR REPRODUCED, IN WHOLE OR IN PART, WITHOUT THE WRITTEN PERMISSION OF GHA ARCHITECTS, THE ARCHITECT. THIS DRAWING IS TO BE RETURNED UPON REQUEST.

GHA
Architecture / Development
14901 Quorum Drive
Suite 300
Dallas Texas 75254
Ph: (972) 239-8884
Fax: (972) 239-5054

STATE OF MICHIGAN
KEVIN HENDERSON
ARCHITECT
No. 1301058109
LICENSED ARCHITECT
12/21/2021

EST. 1998
SCOOTER'S COFFEE

PROJECT ADDRESS:
1490 WEST ANN ARBOR ROAD
PLYMOUTH, MI 48170

REVISIONS:

TITLE:
EQUIPMENT ELEVATIONS

DATE:
12/21/2021

PROJECT NO.
210536

- [ ] DESIGN DEVELOPMENT
- [x] PERMIT SUBMITTAL
- [x] BID PACKAGE
- [ ] CONSTRUCTION ISSUE

SHEET NO.

K4.0

PROPOSED REDEVELOPMENT
SCOOTER'S COFFEE DRIVE-THRU
1490 WEST ANN ARBOR ROAD, PLYMOUTH, MI 48170

ISSUED FOR: COUNTY REVIEW

DATE: 12/22/2021

CALL 811 NOTE:

CONTRACTOR TO CONTACT 811 SERVICE AT LEAST 3 WORKING DAYS PRIOR TO CONSTRUCTION, TO CONFIRM LOCATION OF EXISTING UTILITIES. DIAL 811.

Know what's below. Call before you dig. www.CALL811.com

SITE LOCATION MAP

SCALE: 1" = 2000'

NORTH

PROJECT DESCRIPTION

CONSTRUCTION OF NEW 664 SQUARE FOOT COFFEE SHOP WITH DRIVE-THROUGH ONLY SERVICE. SITE IMPROVEMENTS INCLUDE NEW DRIVEWAYS, PARKING SPACES FOR EMPLOYEES, UTILITIES AND LANDSCAPING.

Land Use Summary

Characteristic	Existing Conditions	Proposed Conditions
Total Development Area (ac)	0.61	0.61
Impervious Area (ac)	0.46	0.43
Total Pervious Area (ac)	0.15	0.18
Pervious Area Breakdown by Cover Type		
Meadow/fallow/natural areas (non-cultivated)	-	-
Predominant NRCS Soil Type (A, B, C, or D)	D	D
Improved areas (turf grass, landscape, row crops)	0.15 acres	0.18 acres
Predominant NRCS Soil Type (A, B, C, or D)	D	D
Wooded Areas	-	-
Predominant NRCS Soil Type (A, B, C, or D)	D	D
Calculated CPVC Volume (cubic feet)		ZERO
CPVC Volume Provided (cubic feet)		ZERO
CPRC Volume Required (cubic feet)		2,395
CPRC Volume Provided (cubic feet)		2,397

DRAWING INDEX

● – 12/14/2021	G0.01	COVER SHEET
● – 12/14/2021	E723-01	TOPOGRAPHIC SURVEY BY NF ENGINEERS
● – 12/14/2021	C1.01	SITE DEMOLITION PLAN
● – 12/14/2021	C1.02	SESC PLAN
● – 12/14/2021	C1.03	SESC DETAILS
● – 12/14/2021	C2.00	SITE CONTEXT PLAN
● – 12/14/2021	C2.01	SITE LAYOUT PLAN
● – 12/14/2021	C2.02	FIRE HYDRANT LOCATIONS MAP
● – 12/14/2021	C3.00	SITE GRADING PLAN
● – 12/14/2021	C4.00	SITE UTILITY PLAN
● – 12/14/2021	C4.01	STORMWATER PROFILES
● – 12/14/2021	C5.00	SITE DETAILS
● – 12/14/2021	C5.01	WAYNE COUNTY NOTES AND DETAILS
● – 12/14/2021	C5.02	UNDERGROUND DETENTION DETAILS
● – 12/14/2021	C5.03	POST-DEVELOPED DRAINAGE PLAN
● – 12/14/2021	C5.04	STORMWATER CALCULATIONS
● – 12/14/2021	C6.00	RIGHT OF WAY PERMIT PLAN
● – 12/14/2021	C6.01	TRAFFIC CONTROL PLAN
● – 12/14/2021	C6.02	TRAFFIC CONTROL DETAILS
● – 12/14/2021	L1.01	LANDSCAPE PLAN
● – 12/14/2021	L2.01	LANDSCAPE DETAILS
○ – 12/14/2021	A2.1	DIMENSION PLAN & FLOOR PLAN
○ – 12/14/2021	A2.4	RCP ROOF PLAN
○ – 12/14/2021	A3.1	EXTERIOR ELEVATIONS
○ – 12/14/2021	A6.1	DUMPSTER ENCLOSURE PLAN
○ – 12/14/2021	E0.01	ELECTRICAL SITE PLAN
○ – 12/14/2021	E0.02	PHOTOMETRIC PLAN

DRAWING LIST LEGEND

MOST RECENT ISSUE DATE

LATEST REVISION NUMBER

FILLED IN CIRCLE INDICATES DRAWING INCLUDED IN THIS DRAWING SET.

PROJECT DIRECTORY

LAND OWNER
FLAGSTAR BANK, FSB
5151 CORPORATE DRIVE
TROY, MI 48098

APPLICANT
BRYAN BENDER
30445 NORTHWESTERN HWY. SUITE 275
FARMINGTON HILLS, MI 48334

ENGINEER
PROGRESSIVE AE
ATTN: JOSHUA MANION, PE
1811 4 MILE ROAD NE
GRAND RAPIDS, MI 49525
TEL: 616-447-3455

progressive|ae

progressive|ae

1811 4 Mile Rd NE · Grand Rapids, MI 49525 · 616.361.2664 · www.progressiveae.com

SCOOTER'S COFFEE

1490 WEST ANN ARBOR RD., PLYMOUTH, MI 48170

STATE OF MICHIGAN · Dec 17, 2021 · JOSHUA PAUL MANION · ENGINEER No. 55538 · LICENSED PROFESSIONAL ENGINEER

This item has been electronically signed and sealed by Joshua Paul Manion using a Digital Signature and date. Printed copies of this document are not considered signed and sealed and the signature must be verified on any electronic copies.

If this document is sealed and signed in a digital or electronic format and is received from someone other than the sealing professional identified in the document, you must contact the sealing professional in writing to validate authenticity of the document. The sealing professional disclaims the seal and signature and shall not be liable for any liability associated with it where the authenticity of any digital or electronic seal or signature has not been validated in this manner.

ISSUANCE

COUNTY REVIEW

12/22/2021

REVISIONS

NO.	DATE	DESCRIPTION

FILE NUMBER	91880004
PROJECT MANAGER	
PROFESSIONAL	JPM
DRAWN BY	AQA
CHECKED BY	

COVER SHEET
G0.01

12/22/2021 3:54:43 PM
P:\91880004\0 WP\90 - G0.01 COVER SHEET.dwg aquinca

THIS DOCUMENT HAS BEEN PREPARED BY PROGRESSIVE AE AS AN INSTRUMENT OF SERVICE, AND PROGRESSIVE AE SHALL RETAIN ALL COMMON LAW, STATUTORY AND OTHER RESERVED RIGHTS, INCLUDING THE COPYRIGHT THERETO.

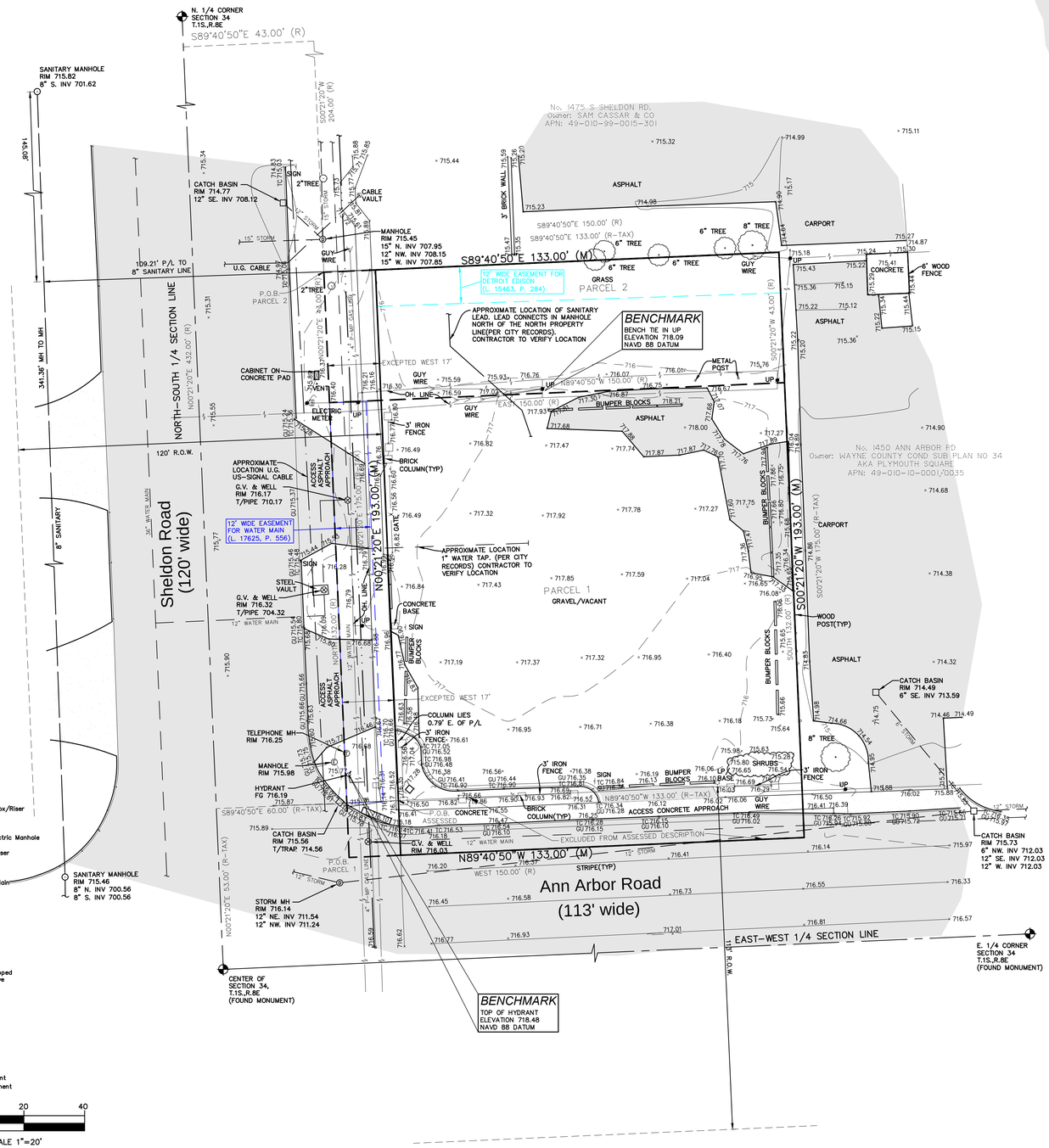

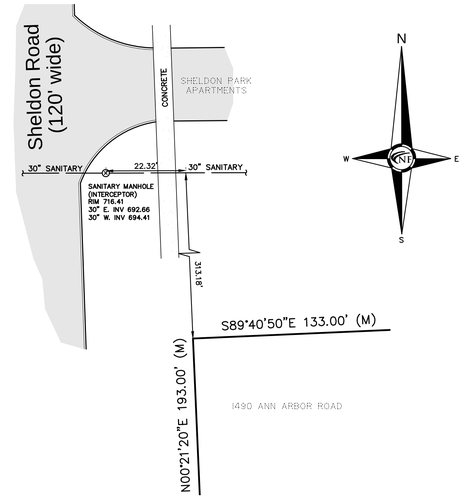

SANITARY MANHOLE
LOCATION DETAIL

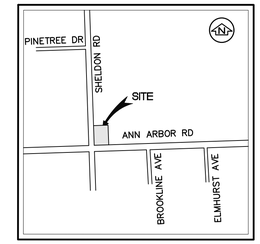

LOCATION MAP

NOWAK & FRAUS ENGINEERS

CIVIL ENGINEERS
LAND SURVEYORS
LAND PLANNERS

46777 WOODWARD AVE.
PONTIAC, MI 48342-5032
TEL. (248) 332-7931
FAX. (248) 332-8257
WWW.NOWAKFRAUS.COM

LEGAL DESCRIPTION

Land in the City of Plymouth, Wayne County, MI, described as follows:

Parcel 1:
Part of the Northeast 1/4 of Section 34, Town 1 South, Range 8 East, City of Plymouth, Wayne County, Michigan, described as follows: Beginning at a point formed by the right-of-way lines of Ann Arbor Road and Sheldon Road, proceeding thence North along the Eastern right-of-way line of Sheldon Road, 132 feet to a point; thence East on a line parallel with the Northern right-of-way line of Ann Arbor Road 150 feet to a point; thence South 132 feet to a point in the Northern right-of-way line of Ann Arbor Road; thence West 150 feet along the Northern right-of-way line of Ann Arbor Road to the point of beginning Except that part taken for widening of Sheldon Road right of way.

Parcel 2 (Parcel IIB):

Part of the Northeast 1/4 of Section 34, Town 1 South, Range 8 East, City of Plymouth, Wayne County, Michigan, described as follows: Beginning at a point on the East right of way line of Sheldon Road distant North 00 degrees 21 minutes 20 seconds East 432.00 feet and South 89 degrees 40 minutes 50 seconds East 43.00 feet and South 00 degrees 21 minutes 20 seconds West 204.00 feet from the center of Section 34, Town 1 South, Range 8 East, and proceeding thence South 89 degrees 40 minutes 50 seconds East 150.00 feet; thence South 00 degrees 21 minutes 20 seconds West 43.00 feet; thence North 89 degrees 40 minutes 50 seconds West 150.00 feet; thence North 00 degrees 21 minutes 20 seconds East along the East line of Sheldon Road 43.00 feet to the point of beginning, except the West 17 feet deeded to Board of County Road Commissioners of the County of Wayne.

Parcel 1 and 2 described for tax purposes as:

Part of the Northeast 1/4 of Section 34, Town 1 South, Range 8 East, described as: Beginning North 00 degrees 21 minutes 20 seconds East 53.00 feet and South 89 degrees 40 minutes 50 seconds East 60.00 feet from the Center ¼ corner of Section 34; thence North 00 degrees 21 minutes 20 seconds East 175.00 feet; thence South 89 degrees 40 minutes 50 seconds East 133.00 feet; thence South 00 degrees 21 minutes 20 seconds West 175.00 feet; thence North 89 degrees 40 minutes 50 seconds West 133.00 feet to the point of beginning.

Tax Parcel No.: 49-010-99-0013-301

BASIS OF BEARING NOTE

The basis of bearing for this survey was established by the record legal description.

ACCESS NOTE

The subject land has direct vehicle and pedestrian access to Ann Arbor Road and Sheldon Road both are publicly dedicated rights of way.

FLOOD HAZARD NOTE

The Property described on this survey does not lie within a Special Flood Hazard Area as defined by the Federal Emergency Management Agency; the property lies within Zone X of the current available Flood Insurance Rate Map identified as Map No. 26163C0201E bearing an effective date of 02/02/2012.

CEMETERY NOTE

There was no observable evidence of cemeteries or burial grounds within the subject property.

UTILITY NOTE

All utilities are underground unless otherwise noted.

The utilities shown on this survey were determined by field observation. All locations are approximate. The location of any other underground services which may exist can only be depicted if a Utility Plan is furnished to the surveyor.

NOTE: DTE has new regulations that may impact development outside their easement or the public right of way. Client shall contact DTE to determine the 'New Structures and Power Line' requirements as they may apply to any future building or renovation of a structure. DTE Energy can be contacted at 800-477-4747

TABLE A NOTES

2. Street Address is 1490 W Ann Arbor Rd

14. The Southwest corner of the Subject Land lies at the intersection of the North right of way line of Ann Arbor Road and the East right of way line of Sheldon Road.

16: There was no observable evidence of current earth moving work, building construction or building additions observed in the process of conducting the fieldwork.

17: There are no known proposed changes in street right-of-way lines available from the controlling jurisdiction.

17: There was no observable evidence of recent street or sidewalk construction or repairs observed in the process of conducting the fieldwork.

18: Improvements within offsite easements or servitudes as provided by the Title Company are shown within 25 feet of the subject land only.

SITE DATA

Gross Land Area: 25,668 Square Feet or 0.589 Acres.
Assessed Land Area: 28,949 Square Feet or 0.664 Acres
Zoned: ARC (Ann Arbor Road Corridor)
Building Setbacks:
Front= 40'
Sides= 25'/adj to residential 50'/adj to a street 40'
Rear= 40'/ adj to residential 50'

Max. Building Height permitted: 35'/ The height of a building may be increased one (1) foot for each one (1) foot by which its setback is in excess of the required yard setbacks, up to a maximum height of forty-five (45) feet.

Total Striped Parking: 0 striped spaces including 0 barrier free (handicap) spaces.

The above setback & height requirements were obtained from the City of Plymouth Zoning Ordinance.

A surveyor cannot make a certification on the basis of an interpretation or opinion of another party. A zoning endorsement letter should be obtained from the City of Plumouth to insure conformity as well as make a final determination of the required building setback requirements.

TITLE NOTES

Subject To:

2. Any facts, rights, interests, or claims that are not shown by the Public Records but that could be ascertained by making inquiry of persons in possession of the Land.

3. Easements, liens or encumbrances, or claims thereof, not shown by the Public Records.

7. The terms, provisions and easement(s) contained in the document entitled "Agreement" recorded June 17, 1964 as Liber 15368, Page 464 of Official Records. (Affects Parcel 2) [EASEMENT IS NOT WITHIN AND DOES NOT TOUCH THE SURVEYED LAND AND ITS LOCATION IS NOT SHOWN].

8. Joint Right of Way granted to the Detroit Edison Company and Michigan Bell Telephone Company disclosed by instrument recorded in Liber 15463, Page 284, Wayne County Records. (Affects Parcel 2) [EASEMENT IS WITHIN THE SURVEYED LAND AND ITS LOCATION IS SHOWN].

9. Oil, gas and mineral reservations contained in the Instrument(s) recorded in Liber 30140, Page 5262. (Affects Parcel 1) [DOCUMENT DOES NOT DESCRIBE ANY PLOTTABLE EASEMENTS OR PLOTTABLE RESTRICTIONS; THE SURVEYED LAND IS WITHIN THE PROPERTY DESCRIBED IN SAID DOCUMENT].

This exception does not constitute a statement as to the ownership of this interest or right. There may be leases, grants, exceptions or reservations of such interests that are not listed.

10. The terms and provisions contained in the document entitled "Restrictive Covenant" recorded June 24, 2002 as Liber 36441, Page 1449 of Official Records. (Affects Parcel 1) [DOCUMENT DOES NOT DESCRIBE ANY PLOTTABLE EASEMENTS OR PLOTTABLE RESTRICTIONS; THE SURVEYED LAND IS WITHIN THE PROPERTY DESCRIBED IN SAID DOCUMENT].

11. The fact, as disclosed by that certain document or documents recorded June 24, 2002 as Liber 36441, Page 1449 of Official Records, that some violation of environmental protection laws may have occurred which may affect the land. (Affects Parcel 1) [DOCUMENT NOT PROVIDED; NOT PLOTTED HEREON]

12. The terms, provisions and easement(s) contained in the document entitled "Special Warranty Deed" recorded November 5, 2004 as Liber 41623, Page 800 of Official Records. (Affects Parcel 1) [DOCUMENT DOES NOT DESCRIBE ANY PLOTTABLE EASEMENTS OR PLOTTABLE RESTRICTIONS; THE SURVEYED LAND IS WITHIN THE PROPERTY DESCRIBED IN SAID DOCUMENT].

13. The terms and provisions contained in the document entitled "Access Agreement Granting Right of Entry" recorded November 5, 2004 as Liber 41623, Page 804 of Official Records. (Affects both Parcels) [DOCUMENT DOES NOT DESCRIBE ANY PLOTTABLE EASEMENTS OR PLOTTABLE RESTRICTIONS; THE SURVEYED LAND IS WITHIN THE PROPERTY DESCRIBED IN SAID DOCUMENT].

14. Interest of others in oil, gas and mineral rights, if any, whether or not recorded in the Public Records.

15. Interest, if any, of the United States, State of Michigan, or any political subdivision thereof, in the oil, gas and minerals in and under and that may be produced from the captioned land.

17. Any rights, title, interest or claim thereof to that portion of the land taken, used or granted for streets, roads or highways.

All exceptions shown or noted on this survey were obtained from title commitment No. NCS-1067054-MICH, with a commitment date of 03-29-2021, issued by First American Title Insurance Company.

LEGEND

AC	= Air Conditioner
ASPH	= Asphalt
CATV	= Cable Television/Box/Riser
CB	= Catch Basin
CO	= Clean Out
CONC	= Concrete
DE MH	= Detroit Edison/Electric Manhole
EM	= Electric Meter
EC	= Electric Conduit/Riser
FI	= Found Iron
FIP	= Found Iron Pipe
FMON	= Found Monument
G	= Gas Service/Gas Main
GL	= Ground Light
GM	= Gas Meter
GP	= Guard Post
GV	= Gate Valve
HYD	= Hydrant
LP	= Light Pole
L/S	= Landscape
MH	= Manhole
MON	= Monument
MW	= Monitor Well
OH LINES	= Overhead Lines
P	= Phone/Box/Riser
PH	= Physically Handicapped
PIV	= Post Indicator Valve
P/L	= Property Line
PM	= Parking Meter
ROW	= Right of Way
SAN	= Sanitary Sewer
SB	= Stop Box (Water)
MH	= Storm Manhole
S.I.	= Set Iron
SO	= Shutoff (Water)
STM	= Storm Sewer
T MH	= Telephone Manhole
TRANS	= Transformer
UP	= Utility Pole
WM	= Water Main
(R)	= Record Measurement
(M)	= Surveyed Measurement
(C)	= Calculated

20 0 10 20 40
GRAPHIC SCALE 1"=20'

Kevin Christopher Navaroli, P.S.
No 4001053503
Dated: 06-24-2021
Revised: 08-31-2021

STATE OF MICHIGAN
KEVIN CHRISTOPHER NAVAROLI
License No. 4001053503
REGISTERED PROFESSIONAL SURVEYOR

PROJECT
Vacant Property

PROJECT LOCATION
No. 1490
Ann Arbor Road
Part of the NE. 1/4 of
Section 34, T.1S., R.8E.,
City of Plymouth,
Wayne County, MI

SHEET
Boundary / Topographic/
ALTA / NSPS
Land Title Survey

REVISIONS
06-24-2021 ORIGINAL SURVEY
08-31-2021 ADD SANITARY SEWER

DRAWN BY: D.McConkey
APPROVED BY: K.N./R.FRAUS
EMAIL: rfraus@nfe-engr.com
DATE ISSUED: 06-24-2021
SCALE: 1"=20'
NFE JOB NO. E723-01
SHEET NO. 1 of 1

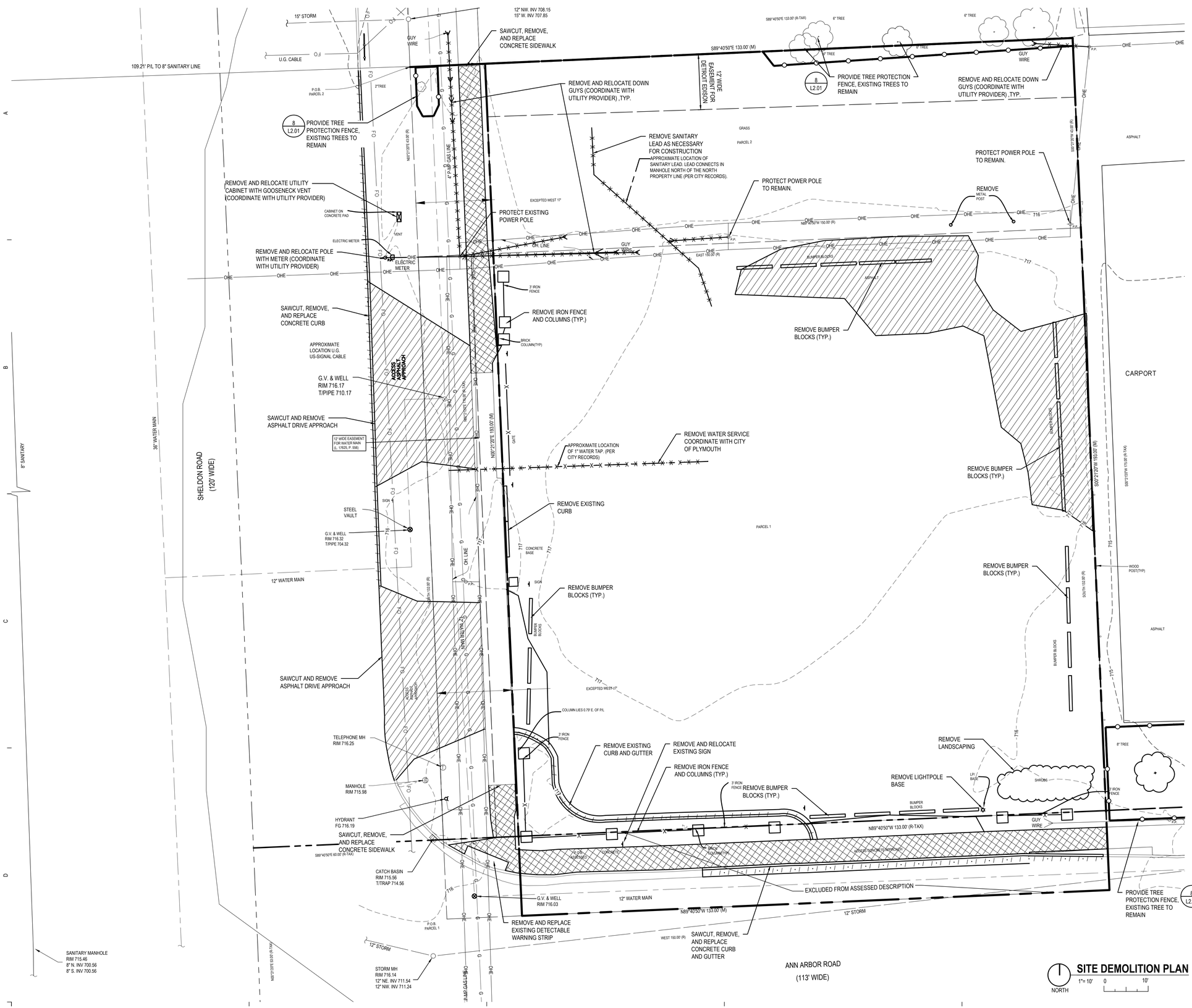

SITE DEMOLITION PLAN

CALL 811 NOTE:

CONTRACTOR TO CONTACT 811 SERVICE AT LEAST 3 WORKING DAYS PRIOR TO CONSTRUCTION, TO CONFIRM LOCATION OF EXISTING UTILITIES. DIAL 811.

Know what's below. Call before you dig.
www.CALL811.com

SITE CLEARING AND DEMOLITION NOTES

1. THE CONTRACTOR SHALL BE RESPONSIBLE FOR VISITING THE SITE AND BECOMING FAMILIAR WITH THE DEMOLITION AND CLEARING REQUIREMENTS.
2. NO REMOVAL, DEMOLITION, CLEARING OR TOPSOIL REMOVAL SHALL OCCUR ON SITE UNTIL THE SESC AND STORMWATER PERMITS HAVE BEEN ISSUED AND THE CONTRACTOR HAS VERIFIED AND STAKED THE LIMITS OF REMOVAL IN THE FIELD. NOTIFY SITE CONSULTANT OF THE START OF CONSTRUCTION AND DATE WHEN THE LIMITS LINE WILL BE ESTABLISHED FOR REVIEW AND APPROVAL.
3. ALL MATERIALS NOTED TO BE SALVAGED SHALL BE TURNED OVER TO THE OWNER OR REINSTALLED ON SITE AS NOTED.
4. NO BURNING OR BURYING OF CLEARED OR DEMOLITION MATERIAL SHALL BE ALLOWED ON SITE.
5. REMOVE ALL STRUCTURES, FOUNDATIONS, BITUMINOUS PAVEMENT, CONCRETE SIDEWALK STEPS AND OTHER EXISTING SITE FEATURES AS INDICATED ON THE DRAWINGS. ALSO, REMOVE ALL DEBRIS FROM WITHIN CONSTRUCTION LIMITS ON SITE. ALL DEMOLITION MATERIALS SHALL BE REMOVED FROM THE SITE AND, UNLESS OTHERWISE NOTED, DISPOSED OF IN A MANNER ACCEPTABLE TO LOCAL JURISDICTION HAVING AUTHORITY.
6. THE CONTRACTOR SHALL BE LICENSED BY THE STATE OF MICHIGAN FOR DEMOLITION REMOVAL AND HAULING OF MATERIALS.
7. THE CONTRACTOR IS RESPONSIBLE TO OBTAIN ALL PERMITS AND FEES FOR THIS WORK.
8. EXISTING UTILITIES ARE LOCATED TO THE BEST OF OUR KNOWLEDGE. THE CONTRACTOR WILL BE RESPONSIBLE FOR VERIFYING EXISTING UTILITY LOCATIONS PRIOR TO THE START OF CONSTRUCTION. THE CONTRACTOR SHALL PROTECT AND MAINTAIN EXISTING UTILITY SERVICES AT ALL TIMES.
9. ALL EXCESS OR UNSUITABLE TOPSOIL OR SUBSOIL TO BECOME THE PROPERTY OF THE CONTRACTOR AND REMOVED OFFSITE.
10. PROTECT EXISTING TREES UNLESS OTHERWISE NOTED. NO PARKING OR STORAGE OF MATERIALS WITHIN TREE ROOT ZONE. PLACE TREE PROTECTION FENCE WHERE SHOWN ON PLAN.
11. TREE PROTECTION FENCE - ORANGE SAFETY FENCE AROUND TREES SUPPORTED BY STEEL T-BAR FENCE POSTS. ZIP TIE FABRIC TO POSTS. INSTALL PRIOR TO ANY CONSTRUCTION ACTIVITY AND MAINTAIN DURING ENTIRE CONSTRUCTION PERIOD.
12. CONTRACTOR TO CALL 811 AT LEAST 3 WORKING DAYS PRIOR TO CONSTRUCTION, TO CONFIRM LOCATION OF EXISTING UTILITIES.
13. CONTRACTOR MUST RESTORE AND REPAIR ANY EXISTING CONDITIONS DISTURBED BY CONSTRUCTION.
14. ANY AREA DISTURBED BY CONSTRUCTION TO BE RESTORED TO CONDITION EQUAL TO OR BETTER THAN BEFORE CONSTRUCTION BEGAN. PATCH PAVEMENT IN-KIND IF REQUIRED.
15. SAWCUT FULL DEPTH ALL EDGES OF PAVEMENT TO BE REMOVED.
16. ALL GROUND AREAS DISTURBED BY CONSTRUCTION TO BE TOPSOILED AND SEEDED PER THE SITE LANDSCAPE PLAN UNLESS SHOWN OTHERWISE ON PLANS.

DEMOLITION LEGEND

- BITUMINOUS PAVEMENT REMOVAL
- CONCRETE REMOVAL
- TREE REMOVAL
- REMOVE CONCRETE CURB
- REMOVE UTILITY LINE

ALL ITEMS IN BOLD TO BE REMOVED UNLESS OTHERWISE NOTED.

progressive ae
1811 4 Mile Rd NE · Grand Rapids, MI 49525 · 616.361.2664 · www.progressiveae.com

SCOOTER'S COFFEE
1490 WEST ANN ARBOR RD., PLYMOUTH, MI 48170

If this document is sealed and signed in a digital or electronic format and is received from someone other than the sealing professional identified in the document, you must contact the sealing professional in writing to validate authenticity of the document. The sealing professional disclaims the seal and signature and shall not be liable for any liability associated with it where the authenticity of any digital or electronic seal or signature has not been validated in this manner.

ISSUANCE
COUNTY REVIEW
12/22/2021

REVISIONS
NO. DATE DESCRIPTION

FILE NUMBER 91880004
PROJECT MANAGER
PROFESSIONAL
DRAWN BY
CHECKED BY

SITE DEMOLITION PLAN
C1.01

12/22/2021 3:55:52 PM
P:\91880004\0 WPI\10 - C1.01 SITE DEMOLITION.dwg aquinoa
THIS DOCUMENT HAS BEEN PREPARED BY PROGRESSIVE AE AS AN INSTRUMENT OF SERVICE, AND PROGRESSIVE AE SHALL RETAIN ALL COMMON LAW, STATUTORY AND OTHER RESERVED RIGHTS, INCLUDING THE COPYRIGHT THERETO.

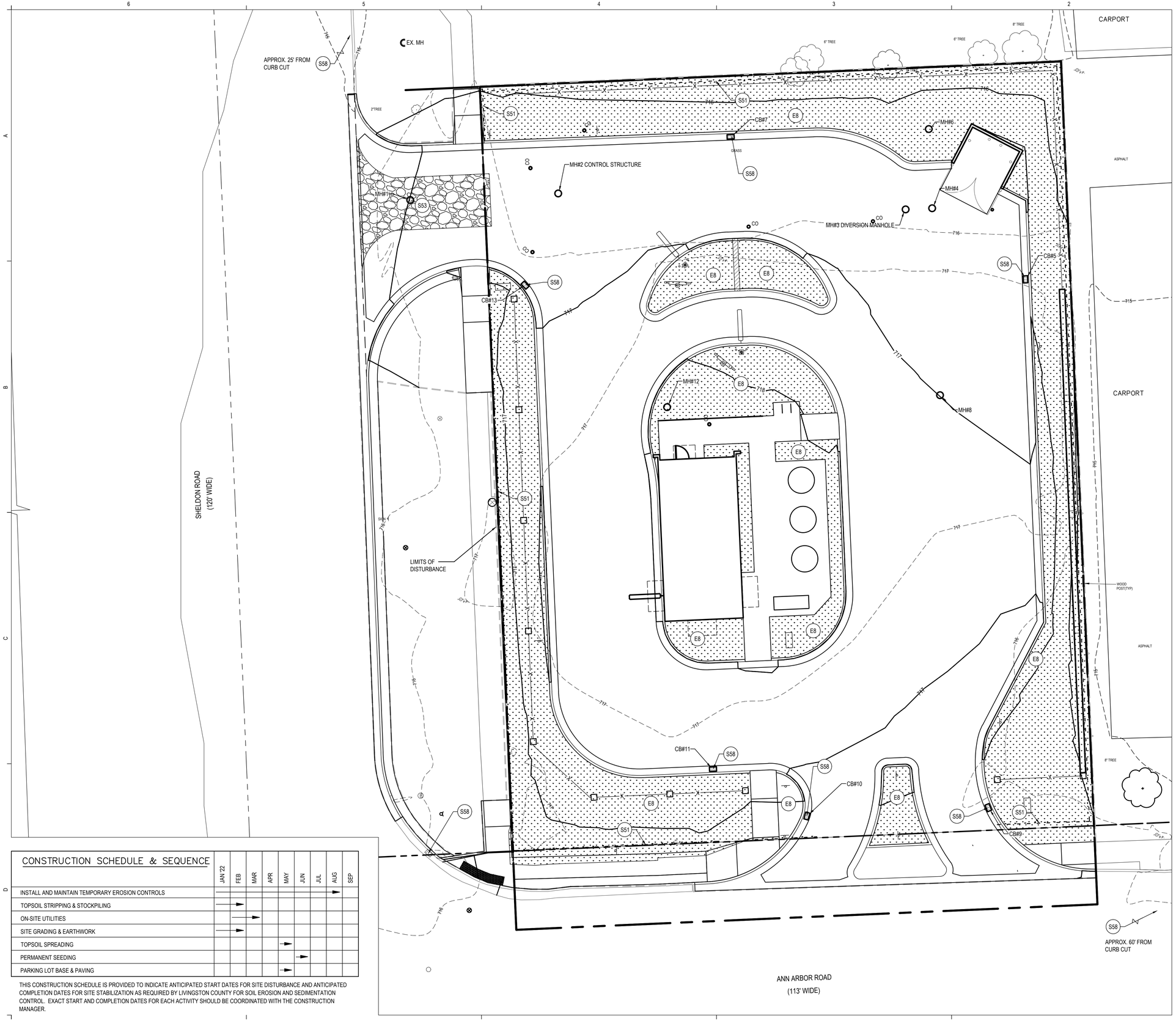

CONSTRUCTION SCHEDULE & SEQUENCE

	JAN '22	FEB	MAR	APR	MAY	JUN	JUL	AUG	SEP
INSTALL AND MAINTAIN TEMPORARY EROSION CONTROLS									
TOPSOIL STRIPPING & STOCKPILING									
ON-SITE UTILITIES									
SITE GRADING & EARTHWORK									
TOPSOIL SPREADING									
PERMANENT SEEDING									
PARKING LOT BASE & PAVING									

THIS CONSTRUCTION SCHEDULE IS PROVIDED TO INDICATE ANTICIPATED START DATES FOR SITE DISTURBANCE AND ANTICIPATED COMPLETION DATES FOR SITE STABILIZATION AS REQUIRED BY LIVINGSTON COUNTY FOR SOIL EROSION AND SEDIMENTATION CONTROL. EXACT START AND COMPLETION DATES FOR EACH ACTIVITY SHOULD BE COORDINATED WITH THE CONSTRUCTION MANAGER.

12/22/2021 3:57:26 PM
P:\918800004\03 WP\10 - C1.02 SESC PLAN.dwg aquinoa

THIS DOCUMENT HAS BEEN PREPARED BY PROGRESSIVE AE AS AN INSTRUMENT OF SERVICE, AND PROGRESSIVE AE SHALL RETAIN ALL COMMON LAW, STATUTORY AND OTHER RESERVED RIGHTS, INCLUDING THE COPYRIGHT THERETO.

CALL 811 NOTE:

CONTRACTOR TO CONTACT 811 SERVICE AT LEAST 3 WORKING DAYS PRIOR TO CONSTRUCTION, TO CONFIRM LOCATION OF EXISTING UTILITIES. DIAL 811.

Know what's below. Call before you dig.
www.CALL811.com

EROSION CONTROL NOTES

1. INSTALL EROSION CONTROL MEASURES AT THE LIMITS OF EARTHWORK PRIOR TO THE START OF ANY EARTHWORK OPERATIONS. ALL OTHER EROSION CONTROL MEASURES SHALL BE INSTALLED IN CONJUNCTION WITH THE CONSTRUCTION SCHEDULE AND SEQUENCE AND SHALL BE INSTALLED IN STRICT ACCORDANCE WITH THE PLANS AND SPECIFICATIONS.
2. MAINTAIN ALL EROSION CONTROL INSTALLATIONS DURING THE COURSE OF CONSTRUCTION. MAKE INSPECTIONS AFTER EACH STORM EVENT AND REPAIR OR REPLACE ANY DAMAGE. REMOVE ACCUMULATED SEDIMENT FROM SEDIMENT BASINS TO MAINTAIN EFFECTIVENESS OF EROSION CONTROL INSTALLATIONS. REPAIR ANY ERODED AREAS ON SLOPES OR NEAR SILT FENCE. REGRADE AND RESEED ANY TEMPORARY SEEDED AREAS AS NECESSARY TO PREVENT EROSION.
3. THE EROSION CONTROL MEASURES INDICATED ON THIS PLAN ARE BASED ON "THE MICHIGAN SOIL EROSION & SEDIMENTATION CONTROL GUIDEBOOK". THE SOIL EROSION AND SEDIMENTATION CONTROLS SHALL BE INSTALLED AND MAINTAINED PER PLANS AND SPECIFICATIONS.
4. KEEP PUBLIC ROADWAYS CLEAR OF ACCUMULATED SEDIMENT. SEDIMENTS SHALL BE REMOVED IMMEDIATELY UPON ENTERING PUBLIC ROADWAYS AND SHALL BE RETURNED TO THE LIKELY POINT OF ORIGIN. SEDIMENTS SHALL NOT BE FLUSHED OR WASHED FROM THE AREA WITH WATER.
5. SILTSACK MANUFACTURED BY CSI GEOTURF OR HANES GEO PRODUCTS OR APPROVED EQUAL SHALL BE USED FOR STORM INLET PROTECTION ITEM S58 (SEE SESC KEYING SYSTEM LEGEND).
6. CONTRACTOR SHALL INSTALL AND MAINTAIN SILT FENCE AROUND ALL SUBSOIL SPOIL AND TOPSOIL STOCKPILE AREAS. ALL SOIL PILES SHALL BE SEEDED WITH APPROVED SEED MIXTURES AND BE LOCATED AWAY FROM ANY DOWNSLOPE STREET, DRIVEWAY, DITCH OR DRAINAGE WAY
7. REMOVE TEMPORARY CONTROL MEASURES AS FOLLOWS:

   PAVEMENT AREAS - MAINTAIN IN SERVICE UNTIL PREPARATION FOR PLACEMENT OF BITUMINOUS LEVELING COURSES

   LAWN AREAS - REMOVE AFTER LAWN IS WELL ESTABLISHED AND ROOTED
8. SILT FENCE SHALL BE INSPECTED AND REPAIRED ONCE A WEEK AND AFTER EVERY RAIN. SEDIMENT SHALL BE REMOVED IF DEPOSITS REACH HALF THE FENCE HEIGHT.
9. CONTRACTOR WILL BE RESPONSIBLE FOR ALL TEMPORARY SOIL EROSION. OWNER WILL BE RESPONSIBLE FOR PERMANENT SOIL EROSION CONTROL.
10. DUST CONTROL SHALL BE PROVIDED BY MEANS OF WATER DISTRIBUTION ON A REGULAR BASIS OVER AREAS THAT COULD POTENTIALLY PRODUCE DUST CONDITIONS.

STANDARD NOTES

1.	TOTAL SITE AREA:	0.59 AC| 25,700 FT²
2.	TOTAL DISTURBED AREA:	0.70 AC| 30,390 FT²
3.	ROOF AND PAVEMENT AREA:	EXISTING: 1,873 FT² PROPOSED: 18,731 FT²

S-E-S-C KEYING SYSTEM

KEY	BEST MANAGEMENT PRACTICES	SYMBOL	WHERE USED
EROSION CONTROLS			
E8	PERMANENT SEEDING		Stabilization method utilized on sites where earth change has been completed (final grading attained).
S51	SILT FENCE		Use adjacent to critical areas, to prevent sediment laden sheet flow from entering these areas.
S53	STABILIZED CONSTRUCTION ACCESS		Used at every point where construction traffic enters or leaves a construction site.
S58	INLET PROTECTION FABRIC DROP		Use at stormwater inlets, especially at construction sites.

LIMITS OF DISTURBANCE

LOD=0.69 ACRES

SOIL EROSION SEDIMENT CONTROL PLAN

NORTH 1"= 10' 0 10'

progressive ae

SCOOTER'S COFFEE

1490 WEST ANN ARBOR RD., PLYMOUTH, MI 48170

18111 4 Mile Rd NE Grand Rapids, MI 49525 616.361.2664 www.progressiveae.com

If this document is sealed and signed in a digital or electronic format and is received from someone other than the sealing professional identified in the document, you must contact the sealing professional in writing to validate authenticity of the document. The sealing professional disclaims the seal and signature and shall not be liable for any liability associated with it where the authenticity of any digital or electronic seal or signature has not been validated in this manner.

ISSUANCE

COUNTY REVIEW

12/22/2021

REVISIONS

NO.	DATE	DESCRIPTION

FILE NUMBER	918800004
PROJECT MANAGER	
PROFESSIONAL	JPM
DRAWN BY	AQA
CHECKED BY	

SOIL EROSION SEDIMENT CONTROL PLAN

C1.02

S58 INLET PROTECTION – FABRIC DROP

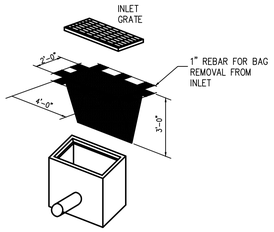

ISOMETRIC VIEW

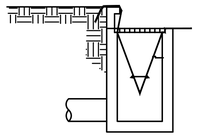

INSTALLATION DETAIL

STANDARD SYMBOL

S53 STABILIZED CONSTRUCTION ACCESS

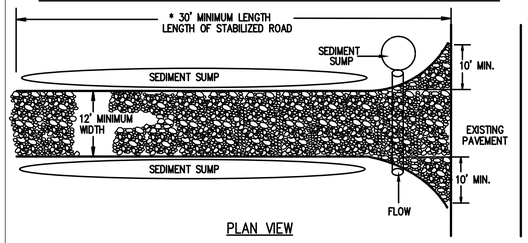

PLAN VIEW

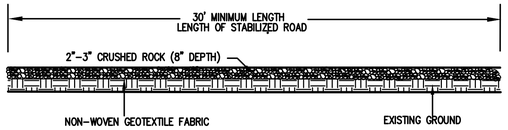

PROFILE

NOTES:

1. Establish stabilized construction entrance prior to the initiation of site construction activities.
2. Care should be taken to prevent material movement into adjacent wetlands/waterbodies.
3. Care should be taken to maintain existing roadside drainage via culvert installation, with sediment sump placed downflow of culvert.

STANDARD SYMBOL

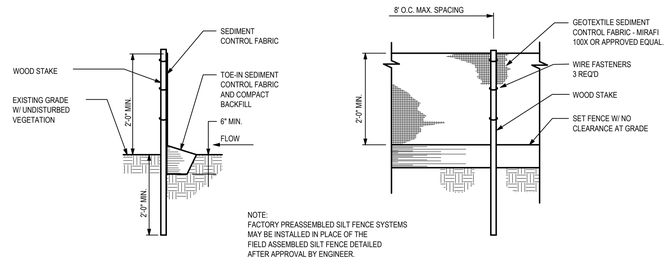

NOTE:
FACTORY PREASSEMBLED SILT FENCE SYSTEMS MAY BE INSTALLED IN PLACE OF THE FIELD ASSEMBLED SILT FENCE DETAILED AFTER APPROVAL BY ENGINEER.

S51 SILT FENCE DETAIL

NOT TO SCALE

progressive ae

1811 4 Mile Rd NE Grand Rapids, MI 49525 616.361.2664 www.progressiveae.com

SCOOTER'S COFFEE

1490 WEST ANN ARBOR RD., PLYMOUTH, MI 48170

If this document is sealed and signed in a digital or electronic format and is received from someone other than the sealing professional identified in the document, you must contact the sealing professional in writing to validate authenticity of the document. The sealing professional disclaims the seal and signature and shall not be liable for any liability associated with it where the authenticity of any digital or electronic seal or signature has not been validated in this manner.

ISSUANCE

COUNTY REVIEW
12/22/2021

REVISIONS

NO.	DATE	DESCRIPTION

FILE NUMBER	91880004
PROJECT MANAGER	
PROFESSIONAL	JPM
DRAWN BY	JTS
CHECKED BY	

SESC DETAILS

C1.03

12/22/2021 3:57:51 PM
P:\91880004\20 WP\10 - C1.03 SESC DETAILS.dwg southwell

THIS DOCUMENT HAS BEEN PREPARED BY PROGRESSIVE AE AS AN INSTRUMENT OF SERVICE, AND PROGRESSIVE AE SHALL RETAIN ALL COMMON LAW, STATUTORY AND OTHER RESERVED RIGHTS, INCLUDING THE COPYRIGHT THERETO.

SITE CONTEXT PLAN

NORTH 1"= 50' 0 50'

Know what's below. Call before you dig.
www.CALL811.com

CALL 811 NOTE:

CONTRACTOR TO CONTACT 811 SERVICE AT LEAST 3 WORKING DAYS PRIOR TO CONSTRUCTION, TO CONFIRM LOCATION OF EXISTING UTILITIES. DIAL 811.

ZONING NOTES

ZONE DISTRICT: ARC
ADJACENT ZONING: RM-1 (NORTH)
RM-1 (EAST)
ARC (SOUTH)
ARC (WEST)

PARCEL SIZE: 0.59 ACRES

MAX BUILDING HEIGHT = 35 FEET
PROPOSED HEIGHT = 19 FEET

REQUIRED SETBACKS FOR ARC ZONING:
FRONT: 10 FEET
SIDE: 10 FEET
REAR: 20 FEET
PARKING SETBACK 0 FEET

PARKING REQUIRED: 5 STACKING SPACES PER WINDOW
1 WINDOW X 5 STACKING SPACES = 5 STACKING SPACES

1 SPACE PER EMPLOYEE REQUIRED
TOTAL EMPLOYEES: 7

PARKING PROVIDED:
STACKING (10'X20'): 13 SPACES
STANDARD (9'X20'): 6 SPACES
BARRIER FREE (9'X20'): 1 SPACES
TOTAL SPACES: 20 SPACES

SITE SIGNAGE

GROUND SIGNS ARE PERMITTED IN THE ARC ZONING DISTRICT. ONE GROUND SIGN IS PERMITTED PER STREET FRONTAGE.

MAXIMUM HEIGHT = 8 FT
MAX AREA = 25 SFT
SETBACK FROM ROW = 5 FT

WALL SIGNS SIGNS ARE PERMITTED IN THE ARC ZONING DISTRICT. ONE WALL SIGN IS PERMITTED.

MAXIMUM AREA = 50% OF SIGNABLE AREA OR 42 SFT

LEGAL DESCRIPTION OF PARCEL 49010990013301

LAND IN THE CITY OF PLYMOUTH, WAYNE COUNTY, MI DESCRIBED AS FOLLOWS:

PARCEL 1:

PART OF THE NORTHEAST 1/4 OF SECTION 34, TOWN 1 SOUTH, RANGE 8 EAST, CITY OF PLYMOUTH, WAYNE COUNTY, MICHIGAN, DESCRIBED AS FOLLOWS: BEGINNING AT A POINT FORMED BY THE RIGHT-OF-WAY LINES OF ANN ARBOR ROAD AND SHELDON ROAD, PROCEEDING THENCE NORTH ALONG THE EASTERN RIGHT-OF-WAY LINE OF SHELDON ROAD, 132 FEET TO A POINT; THENCE EAST ON A LINE PARALLEL WITH THE NORTHERN RIGHT-OF-WAY LINE OF ANN ARBOR ROAD 150 FEET TO A POINT; THENCE SOUTH 132 FEET TO A POINT IN THE NORTHERN RIGHT-OF-WAY LINE OF ANN ARBOR ROAD; THENCE WEST 150 FEET ALONG THE NORTHERN RIGHT-OF-WAY LINE OF ANN ARBOR ROAD TO THE POINT OF BEGINNING EXCEPT THAT PART TAKEN FOR WIDENING OF SHELDON ROAD RIGHT-OF-WAY.

PARCEL 2:

PART OF THE NORTHEAST 1/4 OF SECTION 34, TOWN 1 SOUTH, RANGE 8 EAST, CITY OF PLYMOUTH, WAYNE COUNTY, MICHIGAN, DESCRIBED AS FOLLOWS: BEGINNING AT A POINT ON THE EAST RIGHT-OF-WAY LINE OF SHELDON ROAD DISTANT NORTH 00 DEGREES 21 MINUTES 20 SECONDS EAST 432.00 FEET AND SOUTH 89 DEGREES 40 MINUTES 50 SECONDS EAST 43.00 FEET AND SOUTH 00 DEGREES 21 MINUTES 20 SECONDS WEST 204.00 FEET FROM THE CENTER OF SECTION 34, TOWN 1 SOUTH, RANGE 8 EAST, AND PROCEEDING THENCE SOUTH 89 DEGREES 40 MINUTES 50 SECONDS EAST 150.00 FEET; THENCE SOUTH 00 DEGREES 21 MINUTES 20 SECONDS WEST 43.00 FEET; THENCE NORTH 89 DEGREES 40 MINUTES 50 SECONDS WEST 150.00 FEET; THENCE NORTH 00 DEGREES 21 MINUTES 20 SECONDS EAST ALONG THE EAST LINE OF SHELDON ROAD 43.00 FEET TO THE POINT OF BEGINNING, EXCEPT THE WEST 17 FEET DEEDED TO BOARD OF COUNTY ROAD COMMISSIONERS OF THE COUNTY OF WAYNE.

PARCEL 1 AND 2 DESCRIBED FOR TAX PURPOSES AS:

PART OF THE NORTHEAST 1/4 OF SECTION 34, TOWN 1 SOUTH, RANGE 8 EAST, DESCRIBED AS: BEGINNING NORTH 00 DEGREES 21 MINUTES 20 SECONDS EAST 53.00 FEET AND SOUTH 89 DEGREES 40 MINUTES 50 SECONDS EAST 60.00 FEET FROM THE CENTER 1/4 CORNER OF SECTION 34; THENCE NORTH 00 DEGREES 21 MINUTES 20 SECONDS EAST 175.00 FEET; THENCE SOUTH 89 DEGREES 40 MINUTES 50 SECONDS EAST 133.00 FEET; THENCE SOUTH 00 DEGREES 21 MINUTES 20 SECONDS WEST 175.00 FEET; THENCE NORTH 89 DEGREES 40 MINUTES 50 SECONDS WEST 133.00 FEET TO THE POINT OF BEGINNING.

progressive ae

18111 4 Mile Rd NE Grand Rapids, MI 49525 616.361.2664 www.progressiveae.com

SCOOTER'S COFFEE

1490 WEST ANN ARBOR RD., PLYMOUTH, MI 48170

If this document is sealed and signed in a digital or electronic format and is received from someone other than the sealing professional identified in the document, you must contact the sealing professional in writing to validate authenticity of the document. The sealing professional disclaims the seal and signature and shall not be liable for any liability associated with it where the authenticity of any digital or electronic seal or signature has not been validated in this manner.

ISSUANCE

COUNTY REVIEW

12/22/2021

REVISIONS

NO.	DATE	DESCRIPTION

FILE NUMBER	91880004
PROJECT MANAGER	
PROFESSIONAL	JPM
DRAWN BY	JTS
CHECKED BY	

SITE CONTEXT PLAN

C2.00

12/22/2021 5:53:25 PM
P:\91880004\20 WP\10 - C2.00 - SITE CONTEXT PLAN.dwg aquinas

THIS DOCUMENT HAS BEEN PREPARED BY PROGRESSIVE A-E AS AN INSTRUMENT OF SERVICE, AND PROGRESSIVE A-E SHALL RETAIN ALL COMMON LAW, STATUTORY AND OTHER RESERVED RIGHTS, INCLUDING THE COPYRIGHT THERETO.

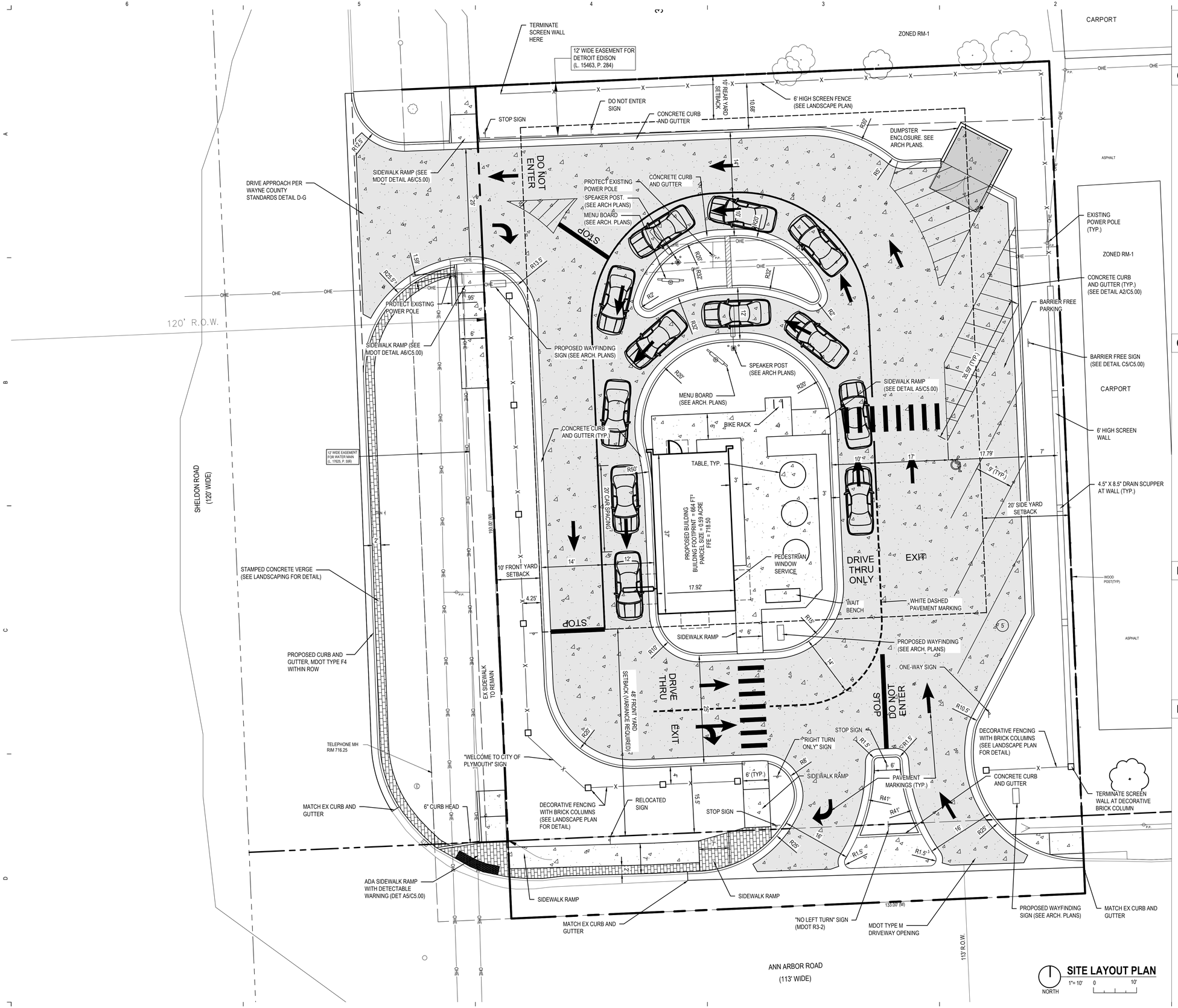

SITE LAYOUT PLAN

CALL 811 NOTE:

CONTRACTOR TO CONTACT 811 SERVICE AT LEAST 3 WORKING DAYS PRIOR TO CONSTRUCTION, TO CONFIRM LOCATION OF EXISTING UTILITIES. DIAL 811.

www.CALL811.com

GENERAL SITE LAYOUT NOTES

1. ALL WORKMANSHIP AND MATERIALS SHALL BE ACCORDING TO THE CURRENT MICHIGAN DEPARTMENT OF TRANSPORTATION (M.D.O.T) STANDARD SPECIFICATIONS FOR CONSTRUCTION.
2. CONTACT "MISS DIG" TOLL FREE AT 1-800-482-7171 THREE (3) DAYS PRIOR TO THE START OF CONSTRUCTION, EXCLUDING SATURDAYS, SUNDAYS, AND HOLIDAYS.
3. NO DIMENSION MAY BE SCALED. REFER UNCLEAR ITEMS TO THE ENGINEER FOR INTERPRETATION.
4. DIMENSIONS SHOWN ARE TO FACE OF CURB UNLESS OTHERWISE NOTED AS B-B (BACK TO BACK) OR E-E (EDGE OF METAL TO EDGE OF METAL).
5. CONTRACTOR TO PAINT STRIPE ALL PARKING SPACES SHOWN. PAINT COLOR TO BE YELLOW.
6. UPON REQUEST, ELECTRONIC INFORMATION WILL BE PROVIDED FOR SITE LAYOUT PURPOSES. CONTRACTOR SHALL REQUEST ALL INFORMATION IN WRITING THROUGH PROGRESSIVE AE. LAYOUT OF ALL NEW CONSTRUCTION SHALL BE DONE BY A LICENSED SURVEYOR.
7. ALL CONCRETE JOINTS SHALL BE TOOLED PER SPECIFICATIONS.
8. CONTRACTOR MUST RESTORE AND REPAIR ANY EXISTING CONDITIONS DISTURBED BY CONSTRUCTION. THIS IS TO INCLUDE BURIED UTILITIES, LIGHTING, LANDSCAPING, SPRINKLING, ETC.
9. ANY AREA DISTURBED BY CONSTRUCTION TO BE RESTORED TO CONDITION EQUAL TO OR BETTER THAN BEFORE CONSTRUCTION BEGAN.
10. ALL PAVEMENT, CURB & GUTTER, SIDEWALK AND UTILITIES WITHIN PUBLIC RIGHT OF WAY SHALL MEET CITY OF PLYMOUTH STANDARDS.

GENERAL NOTES

1. VERIFY THE HORIZONTAL AND VERTICAL LOCATION OF ALL EXISTING UTILITIES PRIOR TO CONSTRUCTION.
2. PROTECT AND MAINTAIN CROSSINGS OF OTHER UTILITIES.
3. REFER TO SURVEY FOR BENCHMARK INFORMATION.
4. ALL MATERIAL, SPECIFICATIONS AND CONSTRUCTION METHODS SHALL BE IN CONFORMANCE WITH ALL APPLICABLE MUNICIPAL AGENCIES.
5. RESTORE ALL STREET SURFACES, DRIVEWAYS, CULVERTS, ROADSIDE DRAINAGE DITCHES, AND OTHER PUBLIC OR PRIVATE STRUCTURES THAT ARE DISTURBED OR DAMAGED AS A RESULT OF CONSTRUCTION ACTIVITIES TO MATCH AT A MINIMUM EXISTING CONDITIONS.
6. CONTRACTOR'S MANNER AND METHOD OF INGRESS AND EGRESS WITH RESPECT TO THE PROJECT AREAS SHALL IN NO WAY PROHIBIT OR DISTURB NORMAL PEDESTRIAN OR VEHICULAR TRAFFIC IN THE VICINITY AND IS SUBJECT TO REGULATION AND WRITTEN APPROVAL OF APPROPRIATE GOVERNING AGENCIES.
7. EXISTING TREES TO REMAIN - CONTRACTOR TO PROTECT ROOT SYSTEMS BY MAINTAINING TREE PROTECTION FENCE AT TREE DRIPLINE TO ELIMINATE MATERIAL STORAGE, PARKING OR CONSTRUCTION TRAFFIC WITHIN THE TREE DRIPLINE.
8. CONSTRUCTION TO BE COMPLETED IN ONE PHASE.

PAVING NOTES

1. PAVEMENT CONSTRUCTION TO BE PERFORMED IN ACCORDANCE TO CURRENT MICHIGAN DEPARTMENT OF TRANSPORTATION STATE HIGHWAY ADMINISTRATION STANDARD SPECIFICATIONS FOR CONSTRUCTION AND MATERIALS.
2. MINIMUM 28 DAY COMPRESSIVE STRENGTH SHALL BE 4,000 PSI FOR ALL EXTERIOR CONCRETE.
   SLUMP RANGE: 3 INCHES TO 5 INCHES
   AIR CONTENT: 5 PERCENT TO 8 PERCENT
3. PROVIDE SCORED CONCRETE CONTROL JOINTS AT 12 FEET MAXIMUM SPACING.
4. CONCRETE JOINT LAYOUT SHALL FORM SQUARE PANELS. WHERE NOT PRACTICAL, RECTANGULAR PANELS MAY BE USED IF THE LONG DIMENSION IS NO MORE THAN 1.5 TIMES THE SHORT DIMENSION.

PAVEMENT LEGEND

STANDARD CONCRETE PAVEMENT	6" CONCRETE 12" COMPACTED SUBBASE, CLASS II SAND
HEAVY DUTY CONCRETE PAVEMENT	8" CONCRETE 12" COMPACTED SUBBASE, CLASS II SAND
CONCRETE SIDEWALK	4" CONCRETE 4" MDOT CLASS II GRANULAR BASE APPROVED COMPACTED SUBBASE
STAMPED CONCRETE VERGE	6" COLORED CONCRETE WITH BRICK WITH BRICK STAMP PER CITY STANDARD 6" MDOT CL II GRANULAR BASE APPROVED COMPACTED SUBBASE

If this document is sealed and signed in a digital or electronic format and is received from someone other than the sealing professional identified in the document, you must contact the sealing professional in writing to validate authenticity of the document. The sealing professional disclaims the seal and signature and shall not be liable for any liability associated with it where the authenticity of any digital or electronic seal or signature has not been validated in this manner.

ISSUANCE

COUNTY REVIEW

12/22/2021

REVISIONS

NO.	DATE	DESCRIPTION

FILE NUMBER	91880004
PROJECT MANAGER	
PROFESSIONAL	JPM
DRAWN BY	AQA
CHECKED BY	

SITE LAYOUT PLAN

C2.01

progressive ae
1811-4 Mile Rd NE . Grand Rapids, MI 49525 616.361.2664 www.progressiveae.com

SCOOTER'S COFFEE

1490 WEST ANN ARBOR RD., PLYMOUTH, MI 48170

12/22/2021 4:01:35 PM
P:\91880004\91880004-WP-10 - C2.01 - SITE LAYOUT.dwg aquinca
THIS DOCUMENT HAS BEEN PREPARED BY PROGRESSIVE AE AS AN INSTRUMENT OF SERVICE, AND PROGRESSIVE AE SHALL RETAIN ALL COMMON LAW, STATUTORY AND OTHER RESERVED RIGHTS, INCLUDING THE COPYRIGHT THERETO.

FIRE HYDRANT LOCATIONS MAP

NORTH

1"= 50' 0 50'

CALL 811 NOTE:

CONTRACTOR TO CONTACT 811 SERVICE AT LEAST 3 WORKING DAYS PRIOR TO CONSTRUCTION, TO CONFIRM LOCATION OF EXISTING UTILITIES. DIAL 811.

Know what's below. Call before you dig.

www.CALL811.com

progressive ae

1811 4 Mile Rd NE | Grand Rapids, MI 49525 | 616.361.2664 | www.progressiveae.com

SCOOTER'S COFFEE

1490 WEST ANN ARBOR RD., PLYMOUTH, MI 48170

If this document is sealed and signed in a digital or electronic format and is received from someone other than the sealing professional identified in the document, you must contact the sealing professional in writing to validate authenticity of the document. The sealing professional disclaims the seal and signature and shall not be liable for any liability associated with it where the authenticity of any digital or electronic seal or signature has not been validated in this manner.

ISSUANCE

COUNTY REVIEW

12/22/2021

REVISIONS

NO.	DATE	DESCRIPTION

FILE NUMBER	91880004
PROJECT MANAGER	
PROFESSIONAL	JPM
DRAWN BY	JTS
CHECKED BY	

FIRE HYDRANT LOCATIONS MAP

C2.02

12/22/2021 4:02:01 PM
P:\91880004\03 Traffic - C2.02 - HYDRANT LOCATIONS MAP.dwg aquinas

THIS DOCUMENT HAS BEEN PREPARED BY PROGRESSIVE A/E AS AN INSTRUMENT OF SERVICE, AND PROGRESSIVE A/E SHALL RETAIN ALL COMMON LAW, STATUTORY AND OTHER RESERVED RIGHTS, INCLUDING THE COPYRIGHT THERETO.

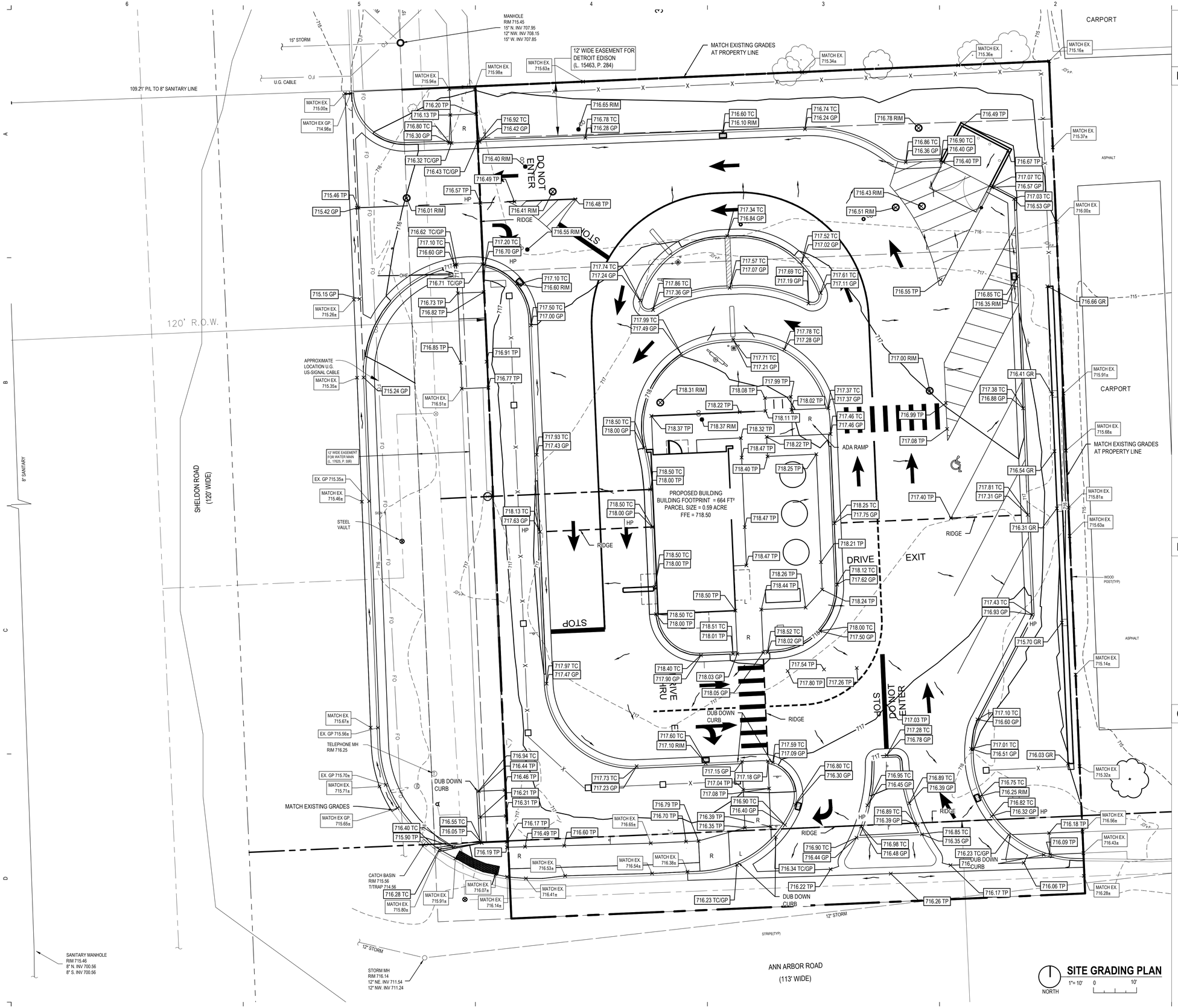

CALL 811 NOTE:

CONTRACTOR TO CONTACT 811 SERVICE AT LEAST 3 WORKING DAYS PRIOR TO CONSTRUCTION, TO CONFIRM LOCATION OF EXISTING UTILITIES. DIAL 811.

www.CALL811.com

EARTHWORK & GRADING NOTES

1. EARTHWORK AND PAVEMENT CONSTRUCTION ARE TO BE PERFORMED IN ACCORDANCE WITH THE 2012 EDITION OF THE MDOT STANDARD SPECIFICATIONS FOR CONSTRUCTION UNLESS OTHERWISE NOTED IN THE FOLLOWING ITEMS.
2. THE SUBGRADE SHALL BE THOROUGHLY PROOFROLLED USING THE EQUIVALENT OF A FULLY LOADED TANDEM AXLE TRUCK HAVING A MINIMUM AXLE WEIGHT OF 10 TONS. SOFT OR YIELDING AREAS THAT CANNOT BE MECHANICALLY STABILIZED SHOULD BE REMOVED AND REPLACED WITH ENGINEERED FILL.
3. PROOFROLLING SHALL BE PERFORMED UNDER THE OBSERVATION OF A GEOTECHNICAL/PAVEMENT ENGINEER.
4. FINISHED SUBGRADE SURFACE SHALL NOT BE MORE THAN O.1 FEET ABOVE OR BELOW ESTABLISHED FINISHED SUBGRADE ELEVATIONS AND ALL GROUND SURFACES SHALL VARY UNIFORMLY BETWEEN INDICATED ELEVATIONS. FINISHED DITCHES SHALL BE GRADED TO ALLOW FOR PROPER DRAINAGE WITHOUT PONDING AND IN A MANNER THAT WILL MINIMIZE EROSION.
5. GRADE THE AGGREGATE BASE MATERIAL TO PROVIDE POSITIVE DRAINAGE AT A MINIMUM OF 1.5 PERCENT.
6. THE AGGREGATE BASE AND SUBBASE SHALL EXTEND 12 INCHES BEYOND THE PAVED EDGE.
7. THE EXISTING SOILS MAY BE UTILIZED AS ENGINEERED FILL PROVIDED ALL DELETERIOUS OR ORGANIC MATERIALS ARE REMOVED FROM THE SOILS. ANY ON-SITE SOILS USED FOR ENGINEERED FILL SHALL BE EVALUATED BY A GEOTECHNICAL ENGINEER PRIOR TO PLACEMENT.
8. ENGINEERED FILL LOCATED WITHIN PAVEMENT AND BUILDING AREAS SHALL BE PLACED IN 8 INCH MAXIMUM LOOSE THICKNESS AND MOISTURE CONDITIONED TO WITHIN 2 PERCENT OF OPTIMUM MOISTURE CONTENT. COMPACT TO MINIMUM OF 95 PERCENT OF THE MAXIMUM DRY DENSITY PER ASTM D-1557, MODIFIED PROCTOR METHOD
9. ALL FILL OPERATIONS SHALL BE OBSERVED BY A QUALIFIED SOIL TECNHICIAN. A MINIMUM OF ONE COMPACTION TEST SHALL BE CONDUCTED PER 2,500 SFT AREA AT EACH LIFT. WITHIN TRENCH EXCAVATIONS, ONE TEST SHALL BE CONDUCTED FOR EACH 100 LINEAR FEET PER LIFT.
10. SIDE SLOPES SHALL NOT EXCEED 1 VERTICAL OVER 3 HORIZONTAL SLOPE UNLESS SHOWN OTHERWISE.
11. PARKING LOT CURBS SHALL BE BUILT WITH REVERSE SLOPE ON THE DOWNHILL SIDE OF THE ISLAND TO ASSURE POSITIVE STORM WATER RUNOFF TO CATCH BASINS.
12. UNLESS SHOWN OTHERWISE, FINISH GRADES OF LAWN/LANDSCAPE ADJACENT TO BUILDING WALLS SHALL BE 6" BELOW FINISH FLOOR ELEVATION.
13. PLACE 4" MINIMUM TOPSOIL IN ALL LANDSCAPE AREAS TO BE SEEDED. PROVIDE POSITIVE DRAINAGE AT ALL TIMES TO ENSURE NO STANDING WATER WITHIN PAVEMENT, BUILDING PAD, OR GREEN AREAS.
14. FOR ALL CURB ISLANDS, CENTER OF ISLANDS TO BE A MINIMUM OF 6" HIGHER THAN TOP OF CURB.

BARRIER FREE NOTES

1. BARRIER FREE PARKING AND ACCESSIBLE ROUTE(S) MUST COMPLY WITH THE AMERICANS WITH DISABILITIES ACT, INCLUDING BUT NOT LIMITED TO THE FOLLOWING:
2. 2% MAXIMUM CROSS SLOPE ON ACCESSIBLE ROUTE(S)
3. 5% MAXIMUM LONGITUDINAL SLOPE (DIRECTION OF TRAVEL) UNLESS AT BARRIER FREE RAMP
4. 2% MAXIMUM SLOPE LONGITUDINAL AND TRANSVERSE SLOPES AT BARRIER FREE PARKING SPACES AND ASSOCIATED ACCESS AISLES
5. ACCESSIBLE ENTRIES - 2% MAXIMUM SLOPE IN ANY DIRECTION FOR THE FIRST 5' FROM ENTRY DOOR
6. CONTRACTOR TO CONTACT ENGINEER PRIOR TO PAVING IF BARRIER FREE SLOPES DO NOT COMPLY OR FOR CLARIFICATION OF ANY DISCREPANCIES.

GRADING LEGEND

	FLOW ARROW
TP	TOP OF PAVEMENT
TC	TOP OF CURB
TW	TOP OF WALL
BW	BOTTOM OF WALL
GR	GROUND
GP	GUTTER PAN
FF	FINISH FLOOR ELEVATION
EX	EXISTING ELEVATION
HP	HIGH POINT
LP	LOW POINT
L	LANDING
R	RAMP

progressive ae

SCOOTER'S COFFEE

1490 WEST ANN ARBOR RD., PLYMOUTH, MI 48170

18111 4 Mile Rd NE Grand Rapids, MI 49525 616.361.2664 www.progressiveae.com

If this document is sealed and signed in a digital or electronic format and is received from someone other than the sealing professional identified in the document, you must contact the sealing professional in writing to validate authenticity of the document. The sealing professional disclaims the seal and signature and shall not be liable for any liability associated with it where the authenticity of any digital or electronic seal or signature has not been validated in this manner.

ISSUANCE

COUNTY REVIEW

12/22/2021

REVISIONS

NO.	DATE	DESCRIPTION

FILE NUMBER	91880004
PROJECT MANAGER	
PROFESSIONAL	JPM
DRAWN BY	AQA
CHECKED BY	

SITE GRADING PLAN

C3.00

12/22/2021 3:26:14 PM
P:\91880004\03 MKTG - C3.00 - GRADING PLAN.dwg aquinos
THIS DOCUMENT HAS BEEN PREPARED BY PROGRESSIVE AE AS AN INSTRUMENT OF SERVICE, AND PROGRESSIVE AE SHALL RETAIN ALL COMMON LAW, STATUTORY AND OTHER RESERVED RIGHTS, INCLUDING THE COPYRIGHT THERETO.

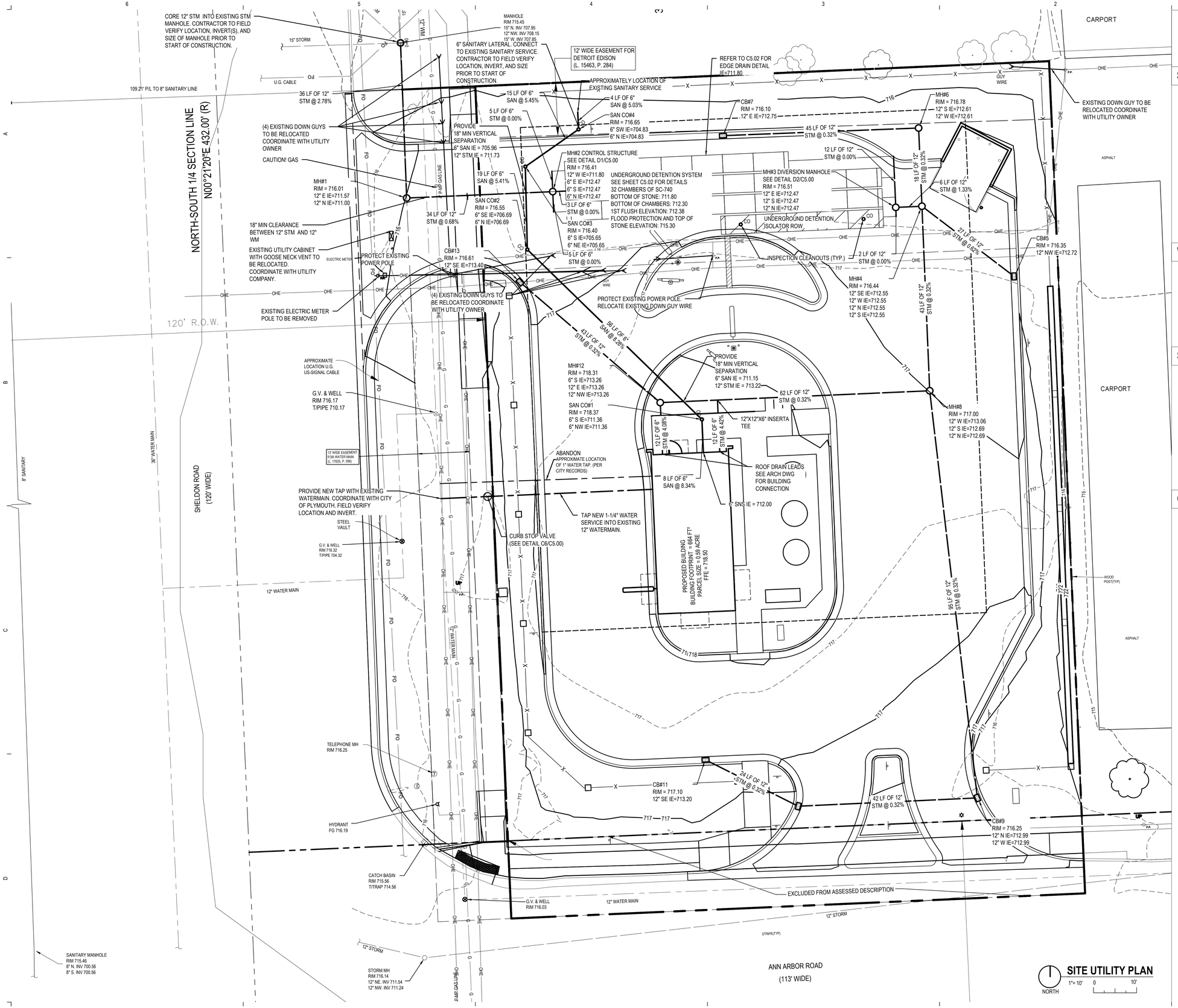

SITE UTILITY PLAN

CALL 811 NOTE:

CONTRACTOR TO CONTACT 811 SERVICE AT LEAST 3 WORKING DAYS PRIOR TO CONSTRUCTION, TO CONFIRM LOCATION OF EXISTING UTILITIES. DIAL 811.

Know what's below. Call before you dig.
www.CALL811.com

SANITARY SEWER NOTES

1. CONTRACTOR SHALL OBTAIN PERMIT TO CONNECT TO SANITARY SYSTEM FROM CITY OF PLYMOUTH.
2. SANITARY SEWER WITHIN RIGHT OF WAY TO COMPLY WITH CITY OF PLYMOUTH SANITARY SEWER SPECIFICATIONS.
3. CLEANOUTS TO BE PROVIDED WITHIN 5 FEET OF THE BUILDING EXTERIOR WALL ON ALL LATERALS EXITING THE BUILDING.
4. SANITARY SEWER LATERALS WITHIN SITE SHALL BE (ASTM D-3034) SDR 23.5.
5. ROOF DRAINS, FOUNDATION DRAINS, AND OTHER CLEAN WATER CONNECTIONS TO THE SANITARY SEWER ARE PROHIBITED.
6. REFER TO PLUMBING PLANS FOR SCHEDULE OF GREASE TRAPS, SAND TRAPS, AND TRENCH DRAIN.

WATERMAIN NOTES

1. PROVIDE A MINIMUM 18" OF VERTICAL SEPARATION AND 10' OF HORIZONTAL SEPARATION BETWEEN WATER SERVICE AND ALL SANITARY AND STORM SEWERS.
2. 2" AND SMALLER DOMESTIC WATER SERVICE SHALL BE TYPE K COPPER PIPE.
3. COORDINATE WATER TAPS WITH CITY OF PLYMOUTH

STORM SEWER NOTES

1. STORM SEWER PIPE 10" DIA. OR LARGER SHALL BE ASTM C-76 CL IV REINFORCED CONCRETE PIPE OR ASTM F2306, HIGH DENSITY POLYETHYHLENE PIPE. STORM SEWER PIPE SMALLER THAN 12" SHALL BE SDR 35 PVC.
2. CATCH BASINS (CB) TO BE 4' DIA. UNLESS NOTED OTHERWISE.
3. CONNECT ALL ROOF DRAINS TO PROVIDED STORM SEWER UNLESS OTHERWISE NOTED.
4. PIPE ALIGNMENTS PROVIDED ON SHEET C5.05.
5. PRETREATMENT PROVIDED WITHIN ISOLATOR ROW. REFER TO VOLUME CALCULATIONS ON C5.04.

GENERAL UTILITY NOTES

1. HVAC EQUIPMENT IS ROOF MOUNTED AND SCREENED. REFER TO ARCHITECTURAL PLANS FOR DETAILS

progressive ae

1811-4 Mile Rd NE . Grand Rapids, MI 49525 616.361.2664 www.progressiveae.com

SCOOTER'S COFFEE

1490 WEST ANN ARBOR RD., PLYMOUTH, MI 48170

If this document is sealed and signed in a digital or electronic format and is received from someone other than the sealing professional identified in the document, you must contact the sealing professional in writing to validate authenticity of the document. The sealing professional disclaims the seal and signature and shall not be liable for any liability associated with it where the authenticity of any digital or electronic seal or signature has not been validated in this manner.

ISSUANCE

COUNTY REVIEW
12/22/2021

REVISIONS

NO.	DATE	DESCRIPTION

FILE NUMBER	91880004
PROJECT MANAGER	
PROFESSIONAL	JPM
DRAWN BY	AQA
CHECKED BY	

SITE UTILITY PLAN

C4.00

12/22/2021 3:34:19 PM
P:\91880004\DWG\PDS - C4.00 - SITE UTILITY.dwg aquinoa

THIS DOCUMENT HAS BEEN PREPARED BY PROGRESSIVE AE AS AN INSTRUMENT OF SERVICE, AND PROGRESSIVE AE SHALL RETAIN ALL COMMON LAW, STATUTORY AND OTHER RESERVED RIGHTS, INCLUDING THE COPYRIGHT THERETO.

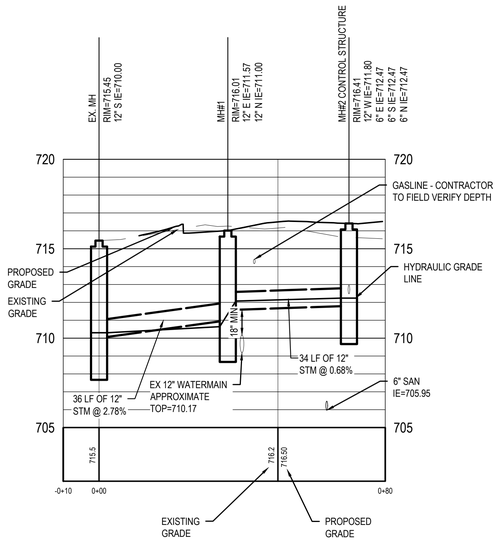

EX MH TO MH#2

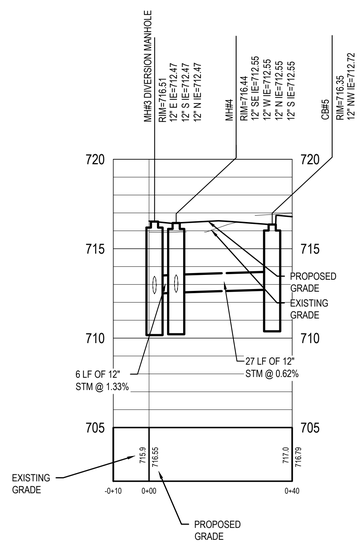

MH#3 TO CB#5

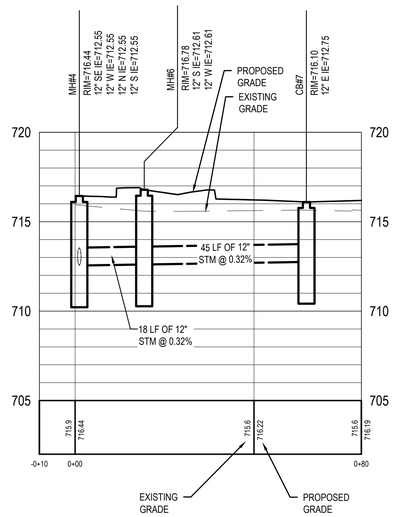

MH#4 TO CB#7

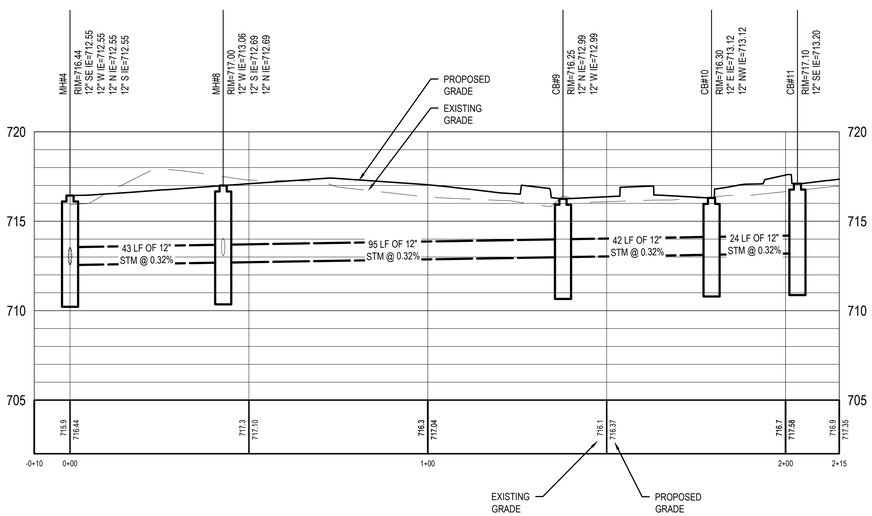

MH#4 TO CB#11

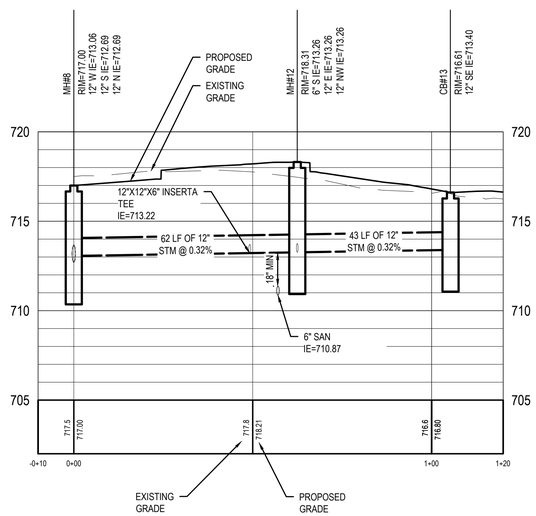

MH#8 TO CB#13

STORMWATER PROFILES

HOR: 1"= 20'
VERT: 1"= 4'

CALL 811 NOTE:

CONTRACTOR TO CONTACT 811 SERVICE AT LEAST 3 WORKING DAYS PRIOR TO CONSTRUCTION, TO CONFIRM LOCATION OF EXISTING UTILITIES. DIAL 811.

www.CALL811.com

progressive ae

1811 4 Mile Rd NE | Grand Rapids, MI 49525 616.361.2664 www.progressiveae.com

SCOOTER'S COFFEE

1490 WEST ANN ARBOR RD., PLYMOUTH, MI 48170

If this document is sealed and signed in a digital or electronic format and is received from someone other than the sealing professional identified in the document, you must contact the sealing professional in writing to validate authenticity of the document. The sealing professional disclaims the seal and signature and shall not be liable for any liability associated with it where the authenticity of any digital or electronic seal or signature has not been validated in this manner.

ISSUANCE

COUNTY REVIEW

12/22/2021

REVISIONS

NO.	DATE	DESCRIPTION

FILE NUMBER	91880004
PROJECT MANAGER	
PROFESSIONAL	JPM
DRAWN BY	JTS
CHECKED BY	

STORMWATER PROFILES

C4.01

12/22/2021 3:50:45 PM
P:\91880004\20 WP\10 - C4.01 - STORMWATER PROFILES.dwg jaguinos

THIS DOCUMENT HAS BEEN PREPARED BY PROGRESSIVE AE AS AN INSTRUMENT OF SERVICE, AND PROGRESSIVE AE SHALL RETAIN ALL COMMON LAW, STATUTORY AND OTHER RESERVED RIGHTS, INCLUDING THE COPYRIGHT THERETO.

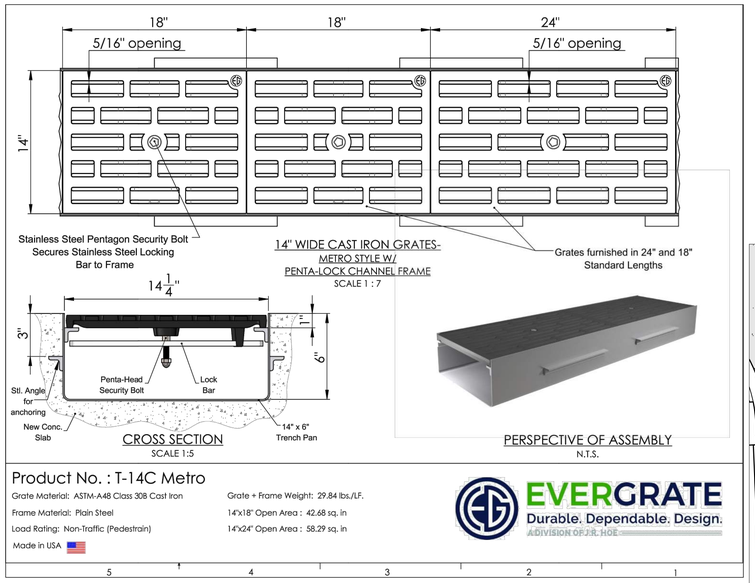

B7 TRENCH CHANNEL DETAIL
NOT TO SCALE

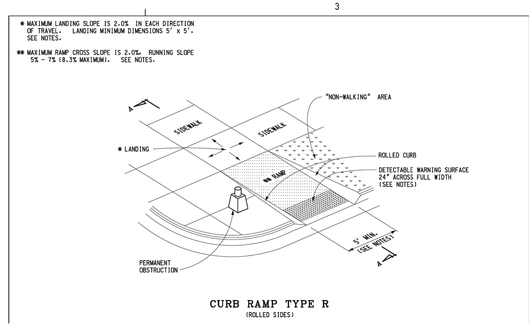

A6 SIDEWALK RAMP-MDOT R-28-J DETAIL
NOT TO SCALE

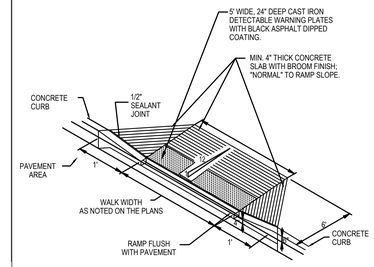

A5 SIDEWALK RAMP-A DETAIL
NOT TO SCALE

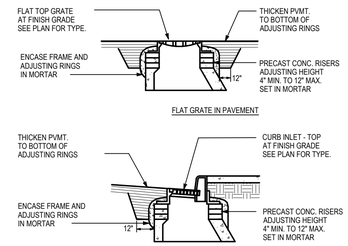

A4 TURNDOWN PAVEMENT AT DRAINAGE STRUCTURE
NOT TO SCALE

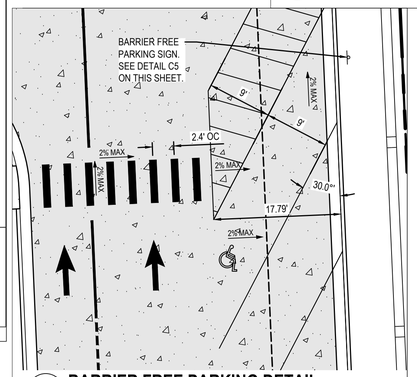

B6 BARRIER FREE PARKING DETAIL
NOT TO SCALE

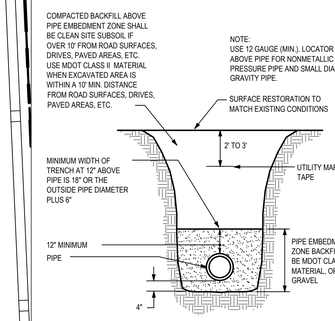

B3 TYPICAL PIPE BEDDING DETAIL
NOT TO SCALE

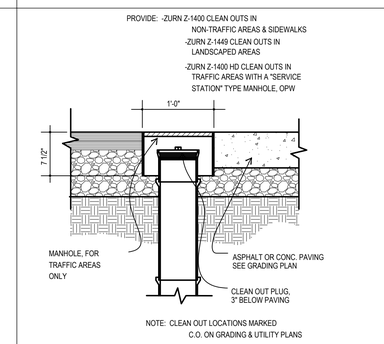

B2 CLEAN OUT DETAIL
NOT TO SCALE

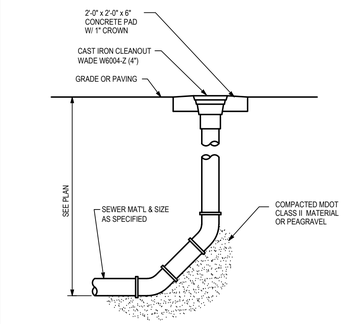

B1 TYPICAL SANITARY CLEANOUT DETAIL
NOT TO SCALE

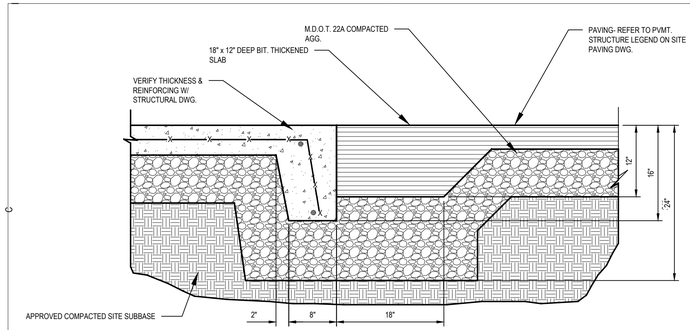

C7 TURNDOWN PAVEMENT AT PEDESTRIAN WALK
NOT TO SCALE

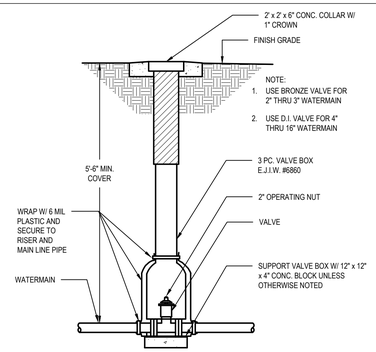

C6 VALVE & BOX DETAIL
NOT TO SCALE

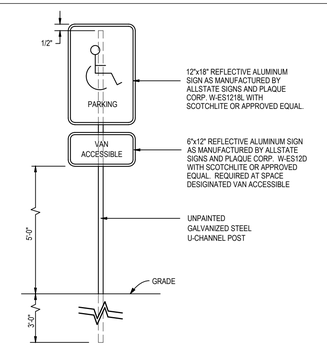

C5 BARRIER FREE PARKING SIGN
NOT TO SCALE

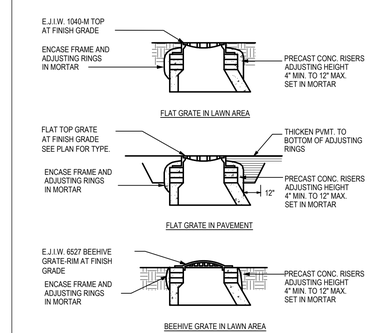

C4 TYPICAL DRAINAGE GRATES
NOT TO SCALE

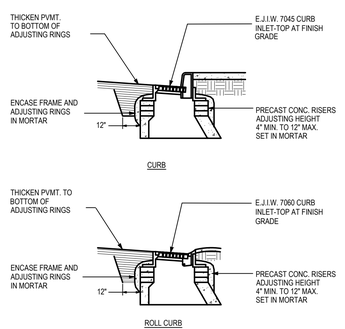

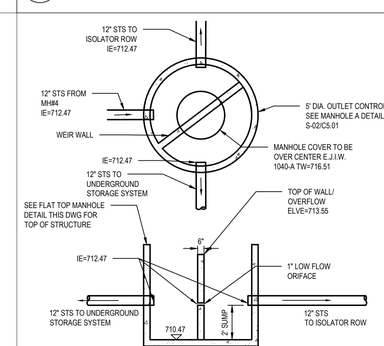

D2 5' DIA. DIVERSION MANHOLE
NOT TO SCALE

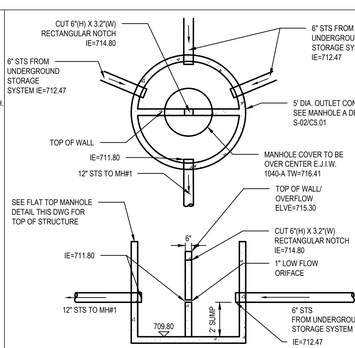

D1 5' DIA. CONTROL MANHOLE
NOT TO SCALE

progressive ae

SCOOTER'S COFFEE

1490 WEST ANN ARBOR RD., PLYMOUTH, MI 48170

1811.4 Mile Rd NE Grand Rapids, MI 49525 616.361.2664 www.progressiveae.com

If this document is sealed and signed in a digital or electronic format and is received from someone other than the sealing professional identified in the document, you must contact the sealing professional in writing to validate authenticity of the document. The sealing professional disclaims the seal and signature and shall not be liable for any liability associated with it where the authenticity of any digital or electronic seal or signature has not been validated in this manner.

ISSUANCE
COUNTY REVIEW
12/22/2021

REVISIONS

NO.	DATE	DESCRIPTION

FILE NUMBER	91880004
PROJECT MANAGER	
PROFESSIONAL	JPM
DRAWN BY	AQA
CHECKED BY	

SITE DETAILS
C5.00

12/22/2021 4:38:01 PM
P:\91880004\20 WHYLD - CS.00 SITE DETAILS.dwg manion\
THIS DOCUMENT HAS BEEN PREPARED BY PROGRESSIVE AE AS AN INSTRUMENT OF SERVICE, AND PROGRESSIVE AE SHALL RETAIN ALL COMMON LAW, STATUTORY AND OTHER RESERVED RIGHTS, INCLUDING THE COPYRIGHT THERETO.

1. All materials and workmanship shall be in accordance with the Wayne County Specifications which are defined as the 2003 Michigan Department of Transportation (MDOT) Standard Specifications for Construction as modified by Wayne County Special Provisions.

2. The Contractor may construct manholes, catch basins and inlets, as detailed, with precast reinforced concrete units provided the following conditions are satisfied:

   a. All precast sections shall be made in accordance with ASTM C-478 except that:

      (1) The minimum wall thickness shall be 5 inches.

      (2) The thickness of base and top slabs shall be as detailed on the Standard Plans.

   b. The maximum diameter of sewer outlet in any precast unit shall be 18 inches, except for Inlets which shall have a maximum outlet diameter of 12 inches.

   c. No openings shall be made in precast units which would leave less than 24 inches of total undisturbed precast manhole wall or would remove more than 30% of the circumference along any horizontal plane. A minimum of 6 inches of undisturbed manhole is required between any two openings. Openings may be constructed by casting, removal of green concrete, or by drilling the openings in cured concrete.

   d. Openings for sewer pipe shall be cut or precast with a diameter 3 inches larger than the outside diameter of the pipe. The opening around the outside of the pipe shall be closed using brick masonry.

   e. Structures for sewers larger than 18 inches or those not meeting the opening requirements shall be built of block or brick to a minimum of 8 inches above the top of sewer, with precast units being used above this point. Where the precast units rest on the block or brick, the groove in the precast unit will be filled with mortar.

   f. Circumstances encountered during construction may preclude the use of precast unit structures, as determined by the Engineer. If the contractor elects to use precast unit structures and field changes prohibit their use, compensation will be made to the contractor for having these units manufactured, supplied, to the project, and not utilized.

   g. Special precast units for use on large diameter sewers must have the approval of the Engineer.

3. All vertical holes in concrete block structure wall shall be completely filled with mortar. All vertical wall joints shall be buttered.

4. The first pipe length entering or leaving any structure shall be temporarily supported by suitable means until the structure is completed and backfilled.

5. A poured Grade S1 concrete base without steel reinforcement, may be substituted for a precast base as approved by the Engineer. A porous backfill cushion will not be required under the poured base, unless the Contractor has excavated below the required elevation, at which time the Engineer will decide as to the merits of increasing the thickness of the concrete base or the use of a porous backfill cushion.

6. The conical section of brick or block manholes, catch basins or inlets, shall be shrouded with a geotextile blanket from the top down to 1 foot below the conical section. Precast structures shall be shrouded with the geotextile blanket to a point 1 foot below the stack. Enough geotextile material will be left on the top to roll over the brick stack and under the casting. Also, wrap inlet and outlet pipes at connection to the structures with a geotextile blanket, minimum 1 foot each direction. The geotextile blanket shall meet the requirements of Subsection 910.03.A in the 2003 MDOT Standard Specifications for Construction.

7. A 10 feet length of 6 inch Underdrain in Sewer Trench will be required at proposed drainage structure that do not have longer lengths of underdrain connected to them (see Standard Plan S-14). The cost of these 10 feet lengths of underdrain with end caps shall be included in the cost of the drainage structure.

8. Steps are required for all structures over 10 feet in depth. Steps shall be of an approved design, made of cast iron, aluminum, or plastic coated steel. Rungs shall be a minimum of 10 inches clear length and designed to prevent the foot from slipping off the end. The minimum horizontal load shall be 405 lbf. The minimum vertical load shall be 810 lbf.

REVISION DATE: 08/01/07 | DIRECTOR OF ENGINEERING | DIVISION PERMIT ENGINEER
WAYNE COUNTY DEPARTMENT OF PUBLIC SERVICES
ENGINEERING DIVISION/PERMIT OFFICE
PERMIT STANDARDS
GENERAL NOTES
SCALE: NOT TO SCALE | S-1 | SHEET 1 OF 2

REVISION DATE: 08/01/07 | DIRECTOR OF ENGINEERING | DIVISION PERMIT ENGINEER
WAYNE COUNTY DEPARTMENT OF PUBLIC SERVICES
ENGINEERING DIVISION/PERMIT OFFICE
PERMIT STANDARDS
GENERAL NOTES
SCALE: NOT TO SCALE | S-1 | SHEET 2 OF 2

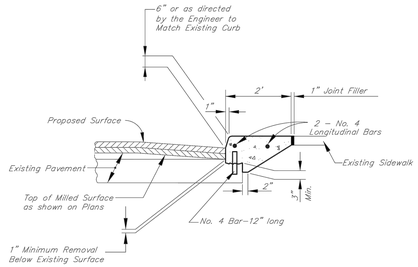

Note:

Remove existing curb to a minimum of 1 inch below existing pavement surface. If an existing longitudinal sidewalk joint is more than 3"-6" from the curb face, the sidewalk shall be sawed for the Integral Concrete Curb Cap & Walk section. If an existing longitudinal sidewalk joint is closer than 3"-6" from the curb face, the sidewalk shall be removed and replaced outside the Integral Concrete Curb Cap & Walk section. Sidewalk removal and replacement shall be in accordance with the Specifications.

Integral Concrete Curb Cap & Walk (Patching) is curb and walk less than 25 feet in continuous length. Minimum length of patches will be 5 feet.

REVISION DATE: 07/02/2008 | DIRECTOR OF ENGINEERING | DIVISION PERMIT ENGINEER
WAYNE COUNTY DEPARTMENT OF PUBLIC SERVICES
ENGINEERING DIVISION/PERMIT OFFICE
PERMIT STANDARDS
INTEGRAL CONCRETE CURB CAP & WALK
SCALE: NOT TO SCALE | D-7 | SHEET 3 OF 3

CONCRETE CURB CAP

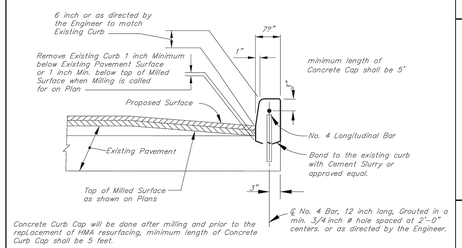

Concrete Curb Cap will be done after milling and prior to the replacement of HMA resurfacing, minimum length of Concrete Curb Cap shall be 5 feet.

REVISION DATE: | DIRECTOR OF ENGINEERING | DIVISION PERMIT ENGINEER
WAYNE COUNTY DEPARTMENT OF PUBLIC SERVICES
ENGINEERING DIVISION/PERMIT OFFICE
PERMIT STANDARDS
CONCRETE CURB CAP
SCALE: NOT TO SCALE | D-7 | SHEET 2 OF 3

CURB DETAIL "A" (CURB CUT)

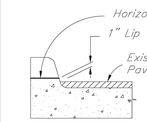

CURB DROP SHALL BE HORIZONTAL SAW CUT AT 1" ABOVE GUTTER LINE. IF THE CURB HAS NOT BEEN HORIZONTALLY CUT SATISFACTORILY, THE CURB CUT WILL HAVE TO BE REMOVED BY SAW CUTTING VERTICALLY AND REPLACED AS PER CURB DETAIL "B".

CURB DETAIL "B" (CURB REPLACEMENT W/ DROP)

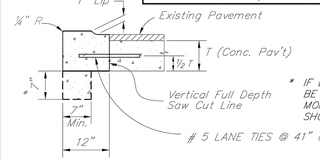

* IF LANE TIES CAN NOT BE UTILIZED, DEEPEN MONOLITHIC CURB AS SHOWN.

CURB DETAIL "C" (CURB REPLACEMENT)

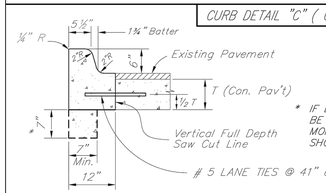

* IF LANE TIES CAN NOT BE UTILIZED, DEEPEN MONOLITHIC CURB AS SHOWN.

WORK THIS SHEET WITH THE GENERAL NOTES ON RS-1.

REVISION DATE: 08/01/07 | DIRECTOR OF ENGINEERING | DIVISION PERMIT ENGINEER
WAYNE COUNTY DEPARTMENT OF PUBLIC SERVICES
ENGINEERING DIVISION/PERMIT OFFICE
PERMIT STANDARDS
CURB DETAIL A , B , C
SCALE: NOT TO SCALE | D-7 | SHEET 1 OF 3

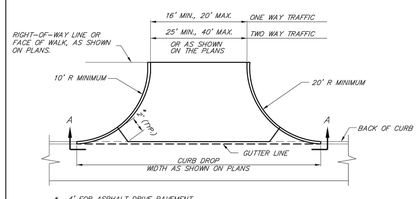

* 4" FOR ASPHALT DRIVE PAVEMENT

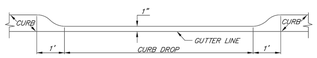

SECTION A-A
NOT TO SCALE

NOTES:

CONSTRUCT THE DRIVE APPROACH WITH 8" NON-REINFORCED CONCRETE ON 6" OF 21AA AGGREGATE BASE COURSE COMPACTED IN PLACE (CIP) OR 6" HMA LEVELING ON 9" OF 21AA AGGREGATE BASE COURSE (CIP).

CURBS SHALL BE CONSTRUCTED WITH HEIGHT VARYING FROM 6" AT BACK OF CURB TO 0" HEIGHT AT FACE OF SIDEWALK OR RIGHT-OF-WAY LINE.

AT ALL CONCRETE DRIVES, PLACE A 1" EXPANSION JOINT AT BACK OF CURB AND ½" EXPANSION JOINT AT FACE OF SIDEWALK OR RIGHT-OF-WAY LINE. MAINTAIN NORMAL SIDEWALK GRADE ACROSS DRIVE, 2% SLOPE UP FROM FACE OF SIDEWALK.

INBOUND OR OUTBOUND RADIUS SHALL BE REDUCED TO 5' FOR ONE-WAY TRAFFIC DRIVE APPROACH.

DRIVE APPROACH SHALL NOT ENCROACH ACROSS PROPERTY LINE EXTENDED WITHOUT WRITTEN APPROVAL FROM THE ADJOINING PROPERTY OWNER.

WORK THIS SHEET WITH THE GENERAL NOTES ON RS-1 AND D-6 SHEET 2-2.

REVISION DATE: 08/01/07 | DIRECTOR OF ENGINEERING | DIVISION PERMIT ENGINEER
WAYNE COUNTY DEPARTMENT OF PUBLIC SERVICES
ENGINEERING DIVISION/PERMIT OFFICE
PERMIT STANDARDS
COMMERCIAL DRIVE APPROACH
SCALE: NOT TO SCALE | D-6 | SHEET 1 OF 2

CURB RETURN JOINING EXISTING PAVEMENT

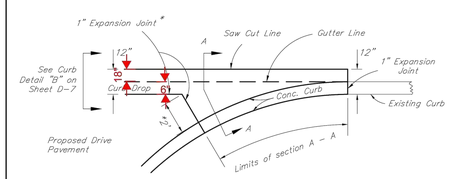

* 4" for HMA Drive Pavement. No Expansion Joint Required.

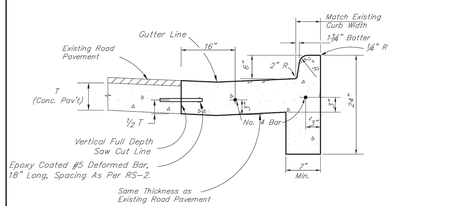

Section "A - A"

WORK THIS SHEET WITH THE GENERAL NOTES ON RS-1.

REVISION DATE: 08/01/07 | DIRECTOR OF ENGINEERING | DIVISION PERMIT ENGINEER
WAYNE COUNTY DEPARTMENT OF PUBLIC SERVICES
ENGINEERING DIVISION/PERMIT OFFICE
PERMIT STANDARDS
COMMERCIAL DRIVE APPROACH
SCALE: NOT TO SCALE | D-6 | SHEET 2 OF 2

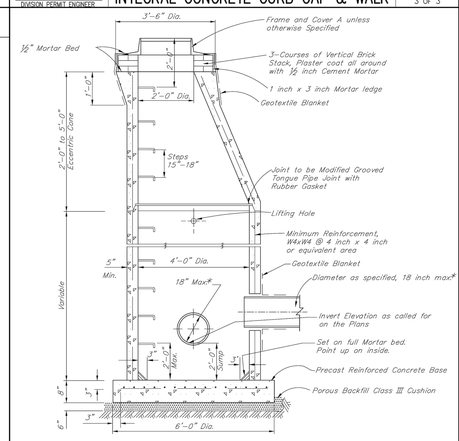

TYPICAL SECTION

*Sewer pipes with a diameter of 24" may be used if all requirements of General Note 2.c. and 2.e. are met.

Precast Units shall meet the requirements of A.S.T.M. C478.

Manhole Steps shall have 3 inch Embedment Minimum (Typical).

Work this Sheet with the General Notes on Standard Plan S-1

REVISION DATE: 08/01/07 | DIRECTOR OF ENGINEERING | DIVISION PERMIT ENGINEER
WAYNE COUNTY DEPARTMENT OF PUBLIC SERVICES
ENGINEERING DIVISION/PERMIT OFFICE
PERMIT STANDARDS
PRECAST MANHOLE A
SCALE: NOT TO SCALE | S-8 | SHEET 1 OF 1

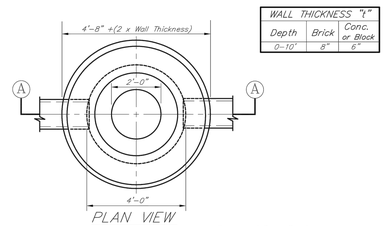

WALL THICKNESS "I"		
Depth	Brick	Conc. or Block
0-10'	8"	6"

PLAN VIEW

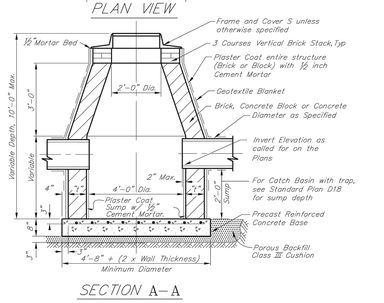

SECTION A-A

Work this Sheet with the General Notes on Standard Plan S-1

REVISION DATE: 08/01/07 | DIRECTOR OF ENGINEERING | DIVISION PERMIT ENGINEER
WAYNE COUNTY DEPARTMENT OF PUBLIC SERVICES
ENGINEERING DIVISION/PERMIT OFFICE
PERMIT STANDARDS
CATCH BASIN A
SCALE: NOT TO SCALE | S-6 | SHEET 1 OF 1

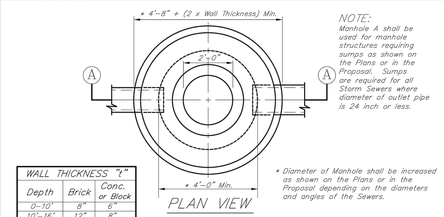

NOTE:
Manhole A shall be used for manhole structures requiring sumps as shown on the Plans or in the Proposal. Sumps are required for all Storm Sewers where diameter of outlet pipe is 24 inch or less.

WALL THICKNESS "I"		
Depth	Brick	Conc. or Block
0'-10'	8"	6"
10'-16'	12"	8"

PLAN VIEW

* Diameter of Manhole shall be increased as shown on the Plans or in the Proposal depending on the diameters and angles of the Sewers.

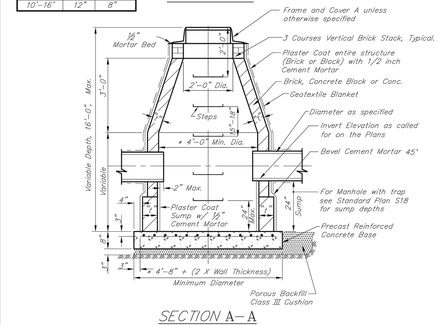

SECTION A-A

Work this Sheet with the General Notes on Standard Plan S-1

REVISION DATE: 08/01/07 | DIRECTOR OF ENGINEERING | DIVISION PERMIT ENGINEER
WAYNE COUNTY DEPARTMENT OF PUBLIC SERVICES
ENGINEERING DIVISION/PERMIT OFFICE
PERMIT STANDARDS
MANHOLE A
SCALE: NOT TO SCALE | S-2 | SHEET 1 OF 1

WAYNE COUNTY DPS GENERAL NOTES:

1. ALL WORK WITHIN THE WAYNE COUNTY ROAD RIGHT-OF-WAY (ROW) AND DRAIN EASEMENT SHALL BE IN ACCORDANCE WITH THE CURRENT STANDARDS AND GENERAL SPECIFICATIONS, INCLUDING SOIL EROSION AND SEDIMENTATION CONTROL OF THE WAYNE COUNTY DEPARTMENT OF PUBLIC SERVICES, AND MDOT 2012 SPECIFICATIONS FOR CONSTRUCTION.

2. THESE PLANS ARE NOT VALID WITHOUT ATTACHMENT OF THE WAYNE COUNTY PERMIT SPECIFICATIONS FOR CONSTRUCTION WITHIN THE ROAD ROW, PARKS, DRAIN EASEMENT OR SANITARY SEWER UNDER JURISDICTION OF THE WAYNE COUNTY (07/01/93) REVISED 12/15/2004

3. CONTRACTOR SHALL CONTACT MISS DIG AT 811 TO IDENTIFY AND FLAG / MARK THE LOCATIONS OF ALL UNDERGROUND UTILITIES AT THE PROPOSED CONSTRUCTION AREAS PRIOR TO START OF CONSTRUCTION, AND SHALL BE RESPONSIBLE FOR DETERMINING THE EXACT LOCATIONS AND ELEVATIONS OF ALL UNDERGROUND UTILITIES, AND RESOLVE ANY CONFLICT BETWEEN THE PROPOSED WORK AND THE EXISTING UNDERGROUND OR ABOVEGROUND UTILITIES.

4. CONTRACTOR SHALL MAINTAIN 18" MINIMUM VERTICAL CLEARANCE AND 3 FEET MINIMUM HORIZONTAL CLEARANCE BETWEEN THE PROPOSED AND EXISTING UTILITIES. ANY PROPOSED UTILITY PERMITTED TO CROSS UNDER THE ROAD OR DRAIN, MUST BE PLACED A MINIMUM OF 7 FEET BELOW THE LOWEST POINT OF THE ROAD, OR 6 FEET BELOW THE DRAIN BOTTOM. OVERHEAD WIRES/CABLES MUST BE INSTALLED 18 FEET MINIMUM ABOVE THE ROAD CENTERLINE. TO RELOCATE ANY UTILITY WITHIN THE ROAD ROW, THE CONTRACTOR SHALL COORDINATE THE RELOCATION WITH THE UTILITY COMPANY AND AS DIRECTED BY THE WAYNE COUNTY ENGINEER.

5. ALL SURVEY MONUMENTS / CORNERS AND BENCH MARKS LOCATED WITHIN THE CONSTRUCTION AREA MUST BE PRESERVED IN ACCORDANCE WITH PUBLIC ACT 74 AS AMENDED (INCLUDING ACT 34, P.A. 2000) AND AS PER WAYNE COUNTY PERMIT RULE 1.5. THE PERMIT HOLDER AND CONTRACTOR SHALL COORDINATE THE WORK WITH A PROFESSIONAL SURVEYOR LICENSED IN THE STATE OF MICHIGAN DURING CONSTRUCTION ACTIVITIES FOR THE PURPOSE OF WITNESSING, PRESERVING OR REPLACING SURVEY MONUMENTS AND MONUMENT BOXES.

6. EXPOSURE OF ANY UTILITIES UNDER THE PAVEMENT WILL NOT BE PERMITTED, UNLESS APPROVED BY THE WAYNE COUNTY ENGINEER. PAVEMENT REMOVAL AND REPLACEMENT SHALL BE PERFORMED PER APPLICABLE WAYNE COUNTY STANDARD DETAILS AN AS DIRECTED BY THE WAYNE COUNTY ENGINEER.

7. CONTRACTOR SHALL RESTORE ALL DISTURBED AREAS WITHIN THE WAYNE COUNTY ROAD ROW AND DRAIN EASEMENT WITH 3" TOPSOIL, THM SEED MIX AND MULCH. SLOPES STEEPER THAN 1 ON 3 SHALL BE RESTORED BY PLACING SOD ON 2" TOPSOIL.

8. ALL BACKFILLS UNDER OR WITHIN 3 FEET OF THE PROPOSED OR EXISTING PAVEMENT, CURB OR SIDEWALK SHALL CONFORM TO THE WAYNE COUNTY TRENCH "B" BACKFILL REQUIREMENTS. TRENCH "A" BACKFILL MAY BE USED WITHIN THE ROAD ROW AREAS UNDER CONDITIONS OTHER THAN THOSE SPECIFIED FOR TRENCH "B".

9. CONTRACTOR IS RESPONSIBLE FOR RESTORING OR REPLACING ALL DISTURBED LANDSCAPED AREAS, SPRINKLER SYSTEMS, FENCES, SIGNS, MAIL BOXES, ETC. WITHIN THE WAYNE COUNTY ROAD ROW AND / OR AS DIRECTED BY THE COUNTY ENGINEER.

10. CONTRACTOR SHALL MAINTAIN TWO-WAY TRAFFIC AT ALL TIMES. OTHERWISE, DETOURING TRAFFIC MUST BE PER APPROVED PLANS. ALL SIGNING AND TRAFFIC CONTROL DEVICES SHALL BE IN ACCORDANCE WITH THE LATEST EDITION OF M.M.U.T.C.D.

11. MAINTAIN A SAFE AND ADEQUATE TRAVEL ROUTE FOR PEDESTRIANS AT ALL TIMES THROUGHOUT THE PROJECT DURATION.

12. TUNNELING, BORING AND JACKING OPERATIONS SHALL BE IN ACCORDANCE WITH THE WAYNE COUNTY SPECIFICATIONS AND DETAILS. BORE PITS SHALL BE PLACED AT MINIMUM 10 FEET FROM THE BACK OF CURB OR EDGE OF PAVEMENT.

13. REMOVE ALL ABANDONED CONDUITS FROM THE COUNTY ROADS ROW OR AS DIRECTED BY THE WAYNE COUNTY ENGINEER.

14. CONTRACTOR SHALL PROVIDE COLD WEATHER PROTECTION FOR ALL PROPOSED CONCRETE WORK (PAVEMENTS, SIDEWALKS, DRIVE APPROACHES, ETC.) AS DIRECTED BY THE WAYNE COUNTY ENGINEER.

15. OVERNIGHT VEHICLE PARKING AND STORAGE OF CONSTRUCTION MATERIALS AND EQUIPMENT'S ARE NOT PERMITTED WITHIN THE WAYNE COUNTY ROADS RIGHTS-OF-WAY.

16. CONTRACTOR SHOULD OBTAIN SOIL EROSION AND SEDIMENTATION CONTROL PERMIT FROM THE WAYNE COUNTY DPS. CONTACT THE WAYNE COUNTY SOIL EROSION OFFICE AT (734) 326-5565, OR THE COMMUNITY HAVING JURISDICTION OVER THE SOIL EROSION PERMIT.

17. CONTRACTOR SHALL NOTIFY THE WAYNE COUNTY TRAFFIC SIGNAL SHOP AT (734) 955-2161 AT LEAST 72 HOURS PRIOR TO START OF WORK AT OR NEAR ANY SIGNALIZED INTERSECTIONS.

18. CONTRACTOR SHALL NOTIFY WAYNE COUNTY 72 HOURS PRIOR TO START OF CONSTRUCTION. CONTACT THE PERMIT OFFICE AT (734) 858-2761.

WAYNE COUNTY CONSTRUCTION NOTES

1. PRIOR TO PAVEMENT REMOVAL THE CONTRACTOR SHALL CONTACT WAY COUNTY ENGINEER/INSPECTOR TO VERIFY IF THE EXISTING GRADE OF THE GUTTER LINES AND THE TOP OF CURBS ARE NEEDED AND TO BE PROVIDED AS REQUESTED.
2. SAW-CUT FULL DEPTH THE EXISTING PAVEMENT TO THE NEAREST JOINT WITHIN WAYNE COUNTY ROAD RIGHT-OF-WAY AND REMOVED THE EXISTING PAVEMENT AND CURB OR AS DIRECTED BY WAY COUNTY ENGINEER.
3. CONSTRUCT THE PRIMARY ROADS AS FOLLOWS:
   - CONSTRUCT WAYNE COUNTY PRIMARY ROAD PAVEMENT PER WAYNE COUNTY PERMIT STANDARDS, "RE-1" OR "PR-2" AS APPLICABLE, OR AS DIRECTED BY THE WAYNE COUNTY ENGINEER.
   - PLACE 9" OR 21AA AGGREGATE COMPACTED TO MINIMUM 95% DENSITY OR MAXIMUM UNIT WEIGHT OR AS DIRECTED BY WAYNE COUNTY ENGINEER.
   - CONSTRUCT WAYNE COUNTY ROAD PAVEMENT REPAIR WITHIN MINIMUM 2" HMA (F) ON MINIMUM OF 10" NON-REINFORCED CONCRETE WC 35 P MIX (3500 PSI AT 28 DAYS) AD INTEGRAL STRAIGHT CURB TYPE "4" AS PER WAYNE COUNTY PERMIT STANDARDS, "RS-3" OR AS DIRECTED BY WAYNE COUNTY ENGINEER.
   - TIE THE NEW PAVEMENT TO THE EXISTING PAVEMENT WITH #5 EPOXY COATED TIE BARS AT MAXIMUM 43-INCH ON CENTER LONGITUDINALLY AND AT 18-INCH ON CENTER TRANSVERSELY AS PER WAYNE COUNTY PERMIT STANDARDS, "RS-2" OR AS DIRECTED BY THE COUNTY ENGINEER.
   - PLACE THE CONSTRUCTION JOINTS OF THE NEW PAVEMENT TO MATCH THE EXISTING PAVEMENT JOINTS OR AS DIRECTED BY WAYNE COUNTY ENGINEER.
4. ANY DAMAGED UNDERDRAIN AS A RESULT OF THIS PROJECT ACTIVITY SHALL BE RECONSTRUCTED PER WAYNE COUNTY PERMIT STANDARDS, "S-14" OR AS DIRECTED BY THE WAYNE COUNTY ENGINEER.
5. ANY DAMAGED SIDEWALK AS A RESULTS OF THIS PROJECT ACTIVITY SHALL BE RECONSTRUCTED AS PER WAYNE COUNTY PERMIT STANDARDS, "RS-5" OR AS DIRECTED BY THE WAYNE COUNTY ENGINEER. MAINTAIN 2% MAXIMUM TRANSVERSE SLOPE ON THE SIDEWALK.
6. ANY DAMAGED SIDEWALK RAMPS AS A RESULT OF THIS PROJECT ACTIVITY SHALL BE RECONSTRUCTED PER MDOT STANDARDS, "R-28-J" OR AS DIRECTED BY THE WAYNE COUNTY ENGINEER.
7. STRUCTURE ADJUSTMENT SHALL BE DETERMINED ON SITE BY THE WAYNE COUNTY ENGINEER.
8. THE CONTRACTOR IS RESPONSIBLE TO RESOLVE ANY WATER PONDING ISSUES AND MAINTAIN A POSITIVE FLOW ALONG THE GUTTER LINE WITHIN THE LIMIT OF THE PROJECT.
9. RELOCATE, RESTORE, OR REPLACE ANY TRAFFIC SIGNS THAT ARE AFFECTED BY THIS CONSTRUCTION AS DIRECTED BY THE WAYNE COUNTY ENGINEER.
10. ALL EXISTING GAS MAINS TO BE ABANDONED IN PLACE WITHIN WAYNE COUNTY RIGHT-OF-WAY SHALL BE FILLED WITH FLOWABLE FILL. CUT AND CAP ALL EXISTING GAS MAINS WHEN ABANDONING, TYP.

progressive ae
1811-4 Mile Rd NE · Grand Rapids, MI 49525 · 616.361.2664 · www.progressiveae.com

SCOOTER'S COFFEE
1490 WEST ANN ARBOR RD., PLYMOUTH, MI 48170

If this document is sealed and signed in a digital or electronic format and is received from someone other than the sealing professional identified in the document, you must contact the sealing professional in writing to validate authenticity of the document. The sealing professional disclaims the seal and signature and shall not be liable for any liability associated with it where the authenticity of any digital or electronic seal or signature has not been validated in this manner.

ISSUANCE
COUNTY REVIEW
12/22/2021

REVISIONS
NO. DATE DESCRIPTION

FILE NUMBER 91880004
PROJECT MANAGER
PROFESSIONAL JPM
DRAWN BY AQA
CHECKED BY

WAYNE COUNTY NOTES AND DETAILS
C5.01

12/22/2021 4:07:04 PM
P:\91880004\00 NWPD - C5.01 WAYNE COUNTY DETAILS.dwg aquinoa
THIS DOCUMENT HAS BEEN PREPARED BY PROGRESSIVE AE AS AN INSTRUMENT OF SERVICE, AND PROGRESSIVE AE SHALL RETAIN ALL COMMON LAW, STATUTORY AND OTHER RESERVED RIGHTS, INCLUDING THE COPYRIGHT THERETO.

Backfill - Embedment Stone & Cover Stone

Continue evenly backfilling between rows and around perimeter until embedment stone reaches tops of chambers. Perimeter stone must extend horizontally to the excavation wall for both straight or sloped sidewalls. **Only after chambers have been backfilled to top of chamber and with a minimum 6" (150 mm) of cover stone on top of chambers can small dozers be used over the chambers for backfilling remaining cover stone.**

Small dozers and skid loaders may be used to finish grading stone backfill in accordance with ground pressure limits in Table 2. They must push material parallel to rows only. Never push perpendicular to rows. StormTech recommends that the contractor inspect chambers before placing final backfill. Any chambers damaged by construction shall be removed and replaced.

Final Backfill of Chambers – Fill Material

Install non-woven geotextile over stone. Geotextile must overlap 24" (600 mm) min. where edges meet. Compact each lift of backfill as specified in the site design engineer's drawings. Roller travel parallel with rows.

Inserta Tee Detail

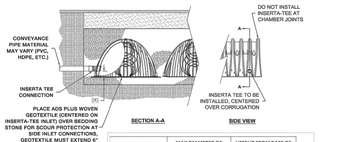

NOTE:
(NEET-NUMBERS WILL VARY BASED ON INLET PIPE MATERIALS. CONTACT STORMTECH FOR MORE INFORMATION.

CHAMBER	MAX DIAMETER OF INSERTA TEE	HEIGHT FROM BASE OF CHAMBER (X)
SC-310	6" (150 mm)	4" (100 mm)
SC-740	10" (250 mm)	4" (100 mm)
DC-780	10" (250 mm)	4" (100 mm)
INSERTA TEE FITTINGS AVAILABLE FOR SDR 26, SDR 35, SCH 40 IPS GASKETED & SOLVENT WELD, N-12, HP STONE, C-900 OR DUCTILE IRON.		

StormTech Isolator Row Plus Detail

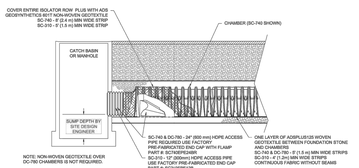

4

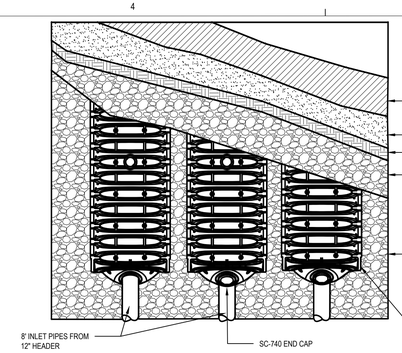

A2 STORMTECH SC-740 CHAMBER SYSTEM TYPICAL PLAN VIEW DETAIL
NOT TO SCALE

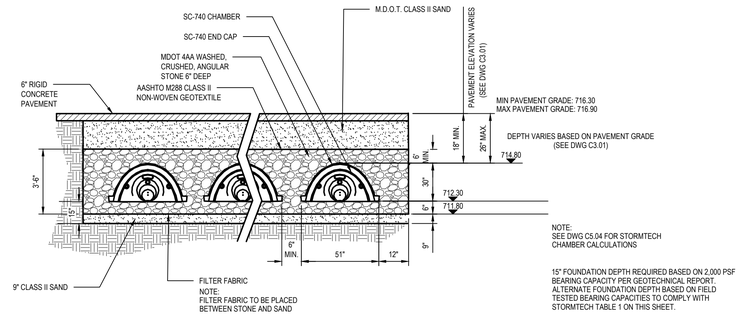

A1 STORMTECH SC-740 CHAMBER SYSTEM TYPICAL CROSS SECTION DETAIL
NOT TO SCALE

*SEE STORMTECH'S DESIGN MANUAL

Table 6 – Acceptable Fill Materials

	MATERIAL LOCATION	DESCRIPTION	AASHTO MATERIAL CLASSIFICATIONS	COMPACTION / DENSITY REQUIREMENT
C	**FINAL FILL:** FILL MATERIAL FOR LAYER 'D' STARTS FROM THE TOP OF THE 'C' LAYER TO THE BOTTOM OF FLEXIBLE PAVEMENT OR UNPAVED FINISHED GRADE ABOVE. NOTE THAT PAVEMENT SUBBASE MAY BE PART OF THE 'D' LAYER	ANY SOILS/ROCK MATERIALS, NATIVE SOILS, OR PER ENGINEER'S PLANS. CHECK PLANS FOR PAVEMENT SUBGRADE REQUIREMENTS.	N/A	PREPARE PER SITE DESIGN ENGINEER'S PLANS. PAVED INSTALLATIONS MAY HAVE STRINGENT MATERIAL AND PREPARATION REQUIREMENTS.
C	**INITIAL FILL:** FILL MATERIAL FOR LAYER 'C' STARTS FROM THE TOP OF THE EMBEDMENT STONE ('B' LAYER) TO 18" (450 mm) ABOVE THE TOP OF THE CHAMBER. NOTE THAT PAVEMENT SUBBASE MAY BE A PART OF THE 'C' LAYER.	GRANULAR WELL-GRADED SOIL/AGGREGATE MIXTURES, <35% FINES OR PROCESSED AGGREGATE. MOST PAVEMENT SUBBASE MATERIALS CAN BE USED IN LIEU OF THIS LAYER.	AASHTO M145[1] A-1, A-2-4, A-3 OR AASHTO M43[1] 3, 357, 4, 467, 5, 56, 57, 6, 67, 68, 7, 78, 8, 89, 9, 10	BEGIN COMPACTIONS AFTER 12" (300 mm) OF MATERIAL OVER THE CHAMBERS IS REACHED. COMPACT ADDITIONAL LAYERS IN 6" (150 mm) MAX LIFTS TO A MIN. 95% PROCTOR DENSITY FOR WELL GRADED MATERIAL AND 95% RELATIVE DENSITY FOR PROCESSED AGGREGATE MATERIALS. ROLLER GROSS VEHICLE WEIGHT NOT TO EXCEED 12,000 lbs (53 kN). DYNAMIC FORCE NOT TO EXCEED 20,000 lbs (89 kN).
B	**EMBEDMENT STONE:** FILL SURROUNDING THE CHAMBERS FROM THE FOUNDATION STONE ('A' LAYER) TO THE 'C' LAYER ABOVE.	CLEAN, CRUSHED, ANGULAR STONE, NOMINAL SIZE DISTRIBUTION BETWEEN 3/4-2 INCH (20-50 mm)	AASHTO M43[1] 3, 357, 4, 467, 5, 56, 57	NO COMPACTION REQUIRED.
A	**FOUNDATION STONE:** FILL BELOW CHAMBERS FROM THE SUBGRADE UP TO THE FOOT (BOTTOM) OF THE CHAMBER.	CLEAN, CRUSHED, ANGULAR STONE, NOMINAL SIZE DISTRIBUTION BETWEEN 3/4-2 INCH (20-50 mm)	AASHTO M43[1] 3, 357, 4, 467, 5, 56, 57	PLATE COMPACT OR ROLL TO ACHIEVE A FLAT SURFACE.[2,3]

PLEASE NOTE:
1. THE LISTED AASHTO DESIGNATIONS ARE FOR GRADATIONS ONLY. THE STONE MUST ALSO BE CLEAN, CRUSHED, ANGULAR. FOR EXAMPLE, A SPECIFICATION FOR #1 STONE WOULD STATE: "CLEAN, CRUSHED, ANGULAR NO. 4 (AASHTO M43) STONE".
2. STORMTECH COMPACTION REQUIREMENTS ARE MET FOR 'A' LOCATION MATERIALS WHEN PLACED AND COMPACTED IN 6" (150 mm) (MAX) LIFTS USING TWO FULL COVERAGES WITH A VIBRATORY COMPACTOR.
3. WHERE INFILTRATION SURFACES MAY BE COMPROMISED BY COMPACTION, FOR STANDARD DESIGN LOAD CONDITIONS, A FLAT SURFACE MAY BE ACHIEVED BY RAKING OR DRAGGING WITHOUT COMPACTION EQUIPMENT. FOR SPECIAL LOAD DESIGNS, CONTACT STORMTECH FOR COMPACTION REQUIREMENTS.

UNDERDRAIN DETAIL
NTS

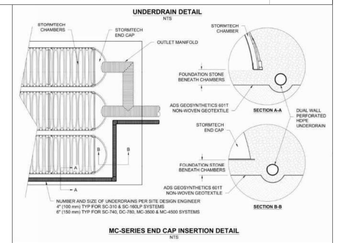

MC-SERIES END CAP INSERTION DETAIL
NTS

14.0 StormTech Product Specifications

1.0 GENERAL

1.1 StormTech chambers are designed to control stormwater runoff. As a subsurface retention system, StormTech chambers retain and allow effective infiltration of water into the soil. As a subsurface detention system, StormTech chambers detain and allow for the metered flow of water to an outfall.

2.0 CHAMBER PARAMETERS

2.1 The Chamber shall be injection molded of an impact modified polypropylene or polyethylene copolymer to maintain adequate stiffness through higher temperatures experienced during installation and service.

2.2 The nominal chamber dimensions of the StormTech SC-740 and DC-780 shall be 30.0" (762 mm) tall, 51.0" (1295 mm) wide and 90.7" (2304 mm) long. The nominal chamber dimensions of the StormTech SC-310 shall be 16.0" (406 mm) tall, 34.0" (864 mm) wide and 90.7" (2304 mm) long. The installed length of a joined chamber shall be 85.4" (2169 mm).

2.3 The chamber shall have a continuously curved section profile.

2.4 The chamber shall be open-bottomed.

2.5 The chamber shall incorporate an overlapping corrugation joint system to allow chamber rows of almost any length to be created. The overlapping corrugation joint system shall be effective while allowing a chamber to be trimmed to shorten its overall length.

2.6 The nominal storage volume of all StormTech chambers includes the volume of the clean, crushed, angular stone with an assumed 40% porosity. The nominal storage volume of a joined StormTech SC-740 chamber shall be 74.9 ft³ (2.1 m³) per chamber when installed per StormTech's typical details. This equates to a storage volume per unit area of bed of 2.2 ft³/ft² (0.67 m³/m²). The nominal storage volume of a joined StormTech DC-780 chamber shall be 78.4 ft³ (2.2 m³) per chamber when installed per StormTech's typical details. This equates to a storage volume per unit area of bed of 2.3 ft³/ft² (0.70 m³/m²). The nominal storage volume of a joined StormTech SC-310 chamber shall be 31.0 ft³ (0.88 m³) per chamber when installed per StormTech's typical details. This equates to a storage volume per unit area of bed of 1.3 ft³/ft² (0.40 m³/m²).

2.7 The SC-740 and SC-310 chambers shall have forty-eight orifices penetrating the sidewalls to allow for lateral conveyance of water.

2.8 The chamber shall have two orifices near its top to allow for equalization of air pressure between its interior and exterior.

2.9 The chamber shall have both of its ends open to allow for unimpeded hydraulic flows and visual inspections down a row's entire length.

2.10 The chamber shall have 14 corrugations.

2.11 The chamber shall have a circular, indented, flat surface on the top of the chamber for an optional 4" (100 mm) diameter (maximum) inspection port.

2.12 The chamber shall be analyzed and designed using AASHTO methods for thermoplastic culverts contained in the LRFD Bridge Design Specifications, 2nd Edition, including Interim Specifications through 2001. Design live load shall be the AASHTO design truck. Design shall consider earth and live loads as appropriate for the minimum to maximum specified depth of fill.

2.13 The chamber shall be manufactured in an ISO 9001:2000 certified facility.

3.0 END CAP PARAMETERS

3.1 The end cap shall be designed to fit into any corrugation of a chamber, which allows: capping a chamber that has its length trimmed; segmenting rows into storage basins of various lengths.

3.2 The end cap shall have saw guides to allow easy cutting for various diameters of pipe that may be used to inlet the system.

3.3 The end cap shall have excess structural adequacies to allow cutting an orifice of any size at any invert elevation.

3.4 The primary face of an end cap shall be curved outward to resist horizontal loads generated near the edges of beds.

3.5 The end cap shall be manufactured in an ISO 9001:2000 certified facility.

4.0 Foundation for Chambers

4.1 FOUNDATION REQUIREMENTS

StormTech chamber systems and embedment stone may be installed in various native soil types. The subgrade bearing capacity and chamber cover height determine the required depth of clean, crushed, angular stone for the chamber foundation. The chamber foundation is the clean, crushed, angular stone placed between the subgrade soils and the feet of the chamber.

As cover height increases (top of chamber to top of finished grade) the chambers foundation requirements increase. Foundation strength is the product of the subgrade soils bearing capacity and the depth of clean, crushed, angular stone below the chamber foot. **Table 1** for the SC-740 and SC-310 and **Table 2** for the DC-780 specify the required minimum foundation depth for varying cover heights and subgrade bearing capacities.

4.2 WEAKER SOILS

For sub-grade soils with allowable bearing capacity less than 2000 pounds per square foot [(2.0 ksf) (96 kPa)], a geotechnical engineer should evaluate the specific conditions. These soils are often highly variable, may contain organic materials and could be more sensitive to moisture. A geotechnical engineer's recommendations may include increasing the stone foundation, improving the bearing capacity of the sub-grade soils through compaction, replacement, or other remedial measures including the use of geogrids. The use of a thermoplastic liner may also be considered for systems installed in subgrade soils that are highly affected by moisture. The project engineer is responsible for ensuring overall site settlement is within acceptable limits. A geotechnical engineer should always review installation of StormTech chambers on organic soils.

4.3 CHAMBER SPACING OPTION

StormTech always requires a minimum of 6" (150 mm) clear spacing between the feet of chambers rows for the SC-310, SC-740 and DC-780 chambers. However, increasing the spacing between chamber rows may allow the application of StormTech chambers with either less foundation stone or with weaker subgrade soils. This may be a good option where a vertical restriction on site prevents the use of a deeper foundation. Contact StormTech's Technical Service Department for more information on this option. In all cases, StormTech recommends consulting a geotechnical engineer for subgrade soils with a bearing capacity less than 2.0 ksf (96 kPa).

Table 1 – SC-310 and SC-740 Minimum Required Foundation Depth in inches (millimeters)

Cover Ht. ft. (m)	Minimum Required Bearing Resistance for Service Loads ksf (kPa)																				
	4.1 (196)	4.0 (192)	3.9 (187)	3.8 (182)	3.7 (177)	3.6 (172)	3.5 (168)	3.4 (163)	3.3 (158)	3.2 (153)	3.1 (148)	3.0 (144)	2.9 (139)	2.8 (134)	2.7 (129)	2.6 (124)	2.5 (120)	2.4 (115)	2.3 (110)	2.2 (105)	2.1 (101)	2.0 (96)
1.5 (0.46)	6 (152)	6 (152)	6 (152)	6 (152)	6 (152)	6 (152)	6 (152)	6 (152)	6 (152)	6 (152)	6 (152)	6 (152)	9 (229)	9 (229)	9 (229)	9 (229)	9 (229)	12 (305)	12 (305)	12 (305)	15 (381)	15 (381)
2 (0.61)	6 (152)	6 (152)	6 (152)	6 (152)	6 (152)	6 (152)	6 (152)	6 (152)	6 (152)	6 (152)	6 (152)	9 (229)	9 (229)	9 (229)	9 (229)	9 (229)	12 (305)	12 (305)	12 (305)	15 (381)	15 (381)	15 (381)
2.5 (0.76)	6 (152)	6 (152)	6 (152)	6 (152)	6 (152)	6 (152)	6 (152)	6 (152)	6 (152)	6 (152)	9 (229)	9 (229)	9 (229)	9 (229)	9 (229)	12 (305)	12 (305)	12 (305)	15 (381)	15 (381)	15 (381)	18 (457)
3 (0.91)	6 (152)	6 (152)	6 (152)	6 (152)	6 (152)	6 (152)	6 (152)	6 (152)	6 (152)	9 (229)	9 (229)	9 (229)	9 (229)	9 (229)	12 (305)	12 (305)	12 (305)	15 (381)	15 (381)	15 (381)	18 (457)	18 (457)
3.5 (1.07)	6 (152)	6 (152)	6 (152)	6 (152)	6 (152)	6 (152)	6 (152)	6 (152)	9 (229)	9 (229)	9 (229)	9 (229)	9 (229)	12 (305)	12 (305)	12 (305)	12 (305)	15 (381)	15 (381)	18 (457)	18 (457)	21 (533)
4 (1.22)	6 (152)	6 (152)	6 (152)	6 (152)	6 (152)	6 (152)	6 (152)	6 (152)	9 (229)	9 (229)	9 (229)	9 (229)	9 (229)	12 (305)	12 (305)	12 (305)	12 (305)	15 (381)	15 (381)	18 (457)	18 (457)	21 (533)
4.5 (1.37)	6 (152)	6 (152)	6 (152)	6 (152)	6 (152)	6 (152)	6 (152)	6 (152)	9 (229)	9 (229)	9 (229)	9 (229)	9 (229)	12 (305)	12 (305)	12 (305)	12 (305)	15 (381)	15 (381)	18 (457)	18 (457)	21 (533)
5 (1.52)	6 (152)	6 (152)	6 (152)	6 (152)	6 (152)	6 (152)	6 (152)	9 (229)	9 (229)	9 (229)	9 (229)	9 (229)	12 (305)	12 (305)	12 (305)	12 (305)	15 (381)	15 (381)	15 (381)	18 (457)	18 (457)	21 (533)
5.5 (1.68)	6 (152)	6 (152)	6 (152)	6 (152)	6 (152)	6 (152)	6 (152)	9 (229)	9 (229)	9 (229)	9 (229)	9 (229)	12 (305)	12 (305)	12 (305)	12 (305)	15 (381)	15 (381)	15 (381)	18 (457)	18 (457)	21 (533)
6 (1.83)	6 (152)	6 (152)	6 (152)	6 (152)	6 (152)	6 (152)	9 (229)	9 (229)	9 (229)	9 (229)	9 (229)	12 (305)	12 (305)	12 (305)	12 (305)	15 (381)	15 (381)	15 (381)	18 (457)	18 (457)	21 (533)	21 (533)
6.5 (1.98)	6 (152)	6 (152)	6 (152)	6 (152)	6 (152)	9 (229)	9 (229)	9 (229)	9 (229)	9 (229)	12 (305)	12 (305)	12 (305)	12 (305)	15 (381)	15 (381)	15 (381)	18 (457)	18 (457)	18 (457)	21 (533)	24 (610)
7 (2.13)	6 (152)	6 (152)	6 (152)	6 (152)	9 (229)	9 (229)	9 (229)	9 (229)	9 (229)	9 (229)	12 (305)	12 (305)	12 (305)	12 (305)	15 (381)	15 (381)	15 (381)	18 (457)	18 (457)	21 (533)	21 (533)	24 (610)
7.5 (2.29)	6 (152)	6 (152)	6 (152)	9 (229)	9 (229)	9 (229)	9 (229)	9 (229)	12 (305)	12 (305)	12 (305)	12 (305)	12 (305)	15 (381)	15 (381)	15 (381)	18 (457)	18 (457)	21 (533)	21 (533)	24 (610)	27 (686)
8 (2.44)	6 (152)	9 (229)	9 (229)	9 (229)	9 (229)	9 (229)	9 (229)	12 (305)	12 (305)	12 (305)	12 (305)	12 (305)	15 (381)	15 (381)	15 (381)	18 (457)	18 (457)	21 (533)	24 (610)	24 (610)	24 (610)	27 (686)

15" FOUNDATION DEPTH

NOTE: The design engineer is solely responsible for assessing the bearing resistance (allowable bearing capacity) of the subgrade soils and determining the depth of foundation stone. Subgrade bearing resistance should be assessed with consideration for the range of soil moisture conditions expected under a stormwater system.

5/22/2021 4:39:09 PM
P:\91880004\02 WP\10- CS.02 UNDERGROUND DETENTION DETAILS.dwg [marvin]
THIS DOCUMENT HAS BEEN PREPARED BY PROGRESSIVE AE AS AN INSTRUMENT OF SERVICE, AND PROGRESSIVE AE SHALL RETAIN ALL COMMON LAW, STATUTORY AND OTHER RESERVED RIGHTS, INCLUDING THE COPYRIGHT THERETO.

progressive|ae
1811.4 Mile Rd NE Grand Rapids, MI 49525 616.361.2664 www.progressiveae.com

SCOOTER'S COFFEE
1490 WEST ANN ARBOR RD., PLYMOUTH, MI 48170

If this document is sealed and signed in a digital or electronic format and is received from someone other than the sealing professional identified in the document, you must contact the sealing professional in writing to validate authenticity of the document. The sealing professional disclaims the seal and signature and shall not be liable for any liability associated with it where the authenticity of any digital or electronic seal or signature has not been validated in this manner.

ISSUANCE
COUNTY REVIEW
12/22/2021

REVISIONS
NO. DATE DESCRIPTION

FILE NUMBER 91880004
PROJECT MANAGER
PROFESSIONAL JPM
DRAWN BY AQA
CHECKED BY

UNDERGROUND DETENTION DETAILS
C5.02

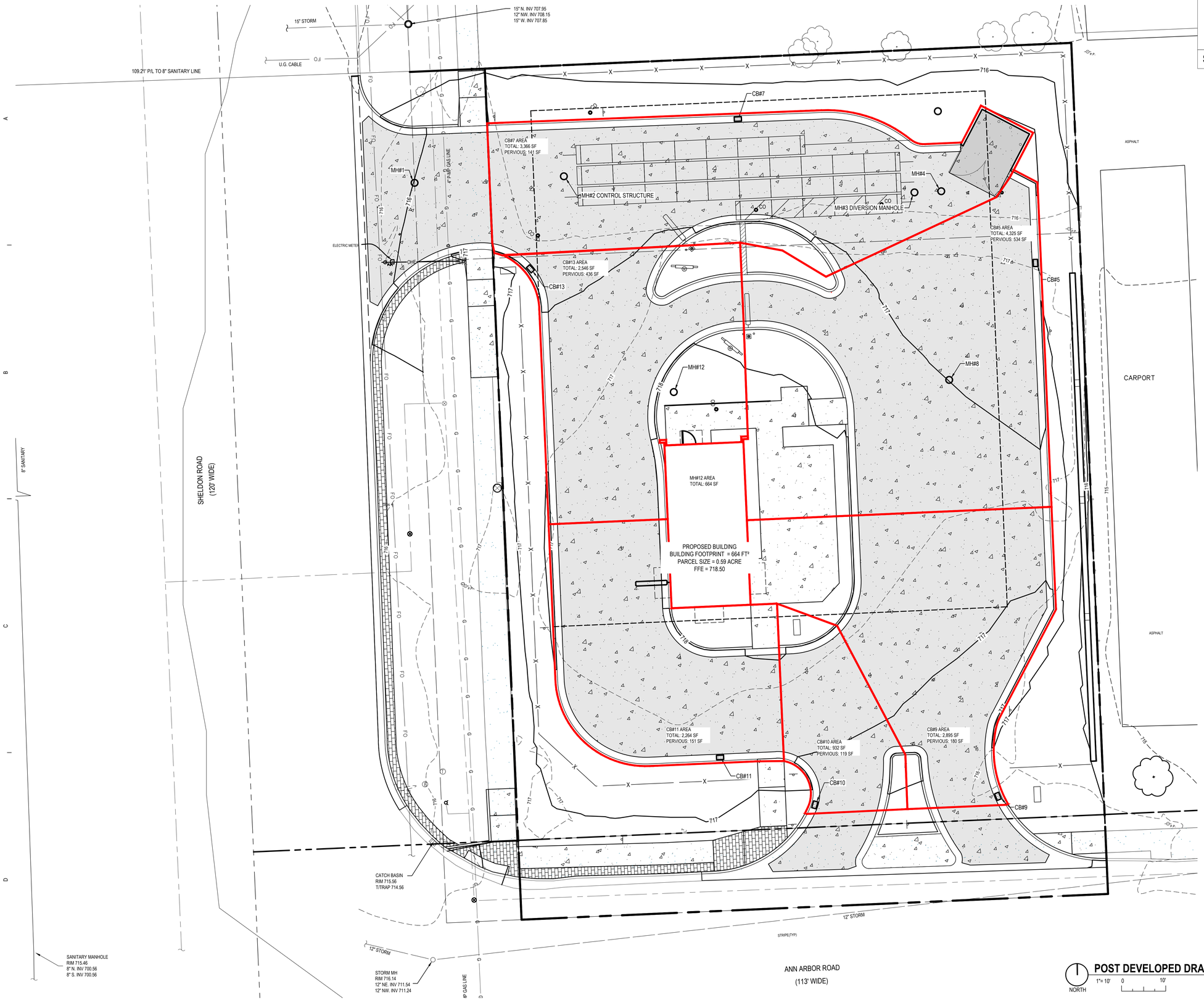

CALL 811 NOTE:

CONTRACTOR TO CONTACT 811 SERVICE AT LEAST 3 WORKING DAYS PRIOR TO CONSTRUCTION, TO CONFIRM LOCATION OF EXISTING UTILITIES. DIAL 811.

Know what's below. Call before you dig.
www.CALL811.com

SUBCATCHMENT LEGEND

CATCH BASIN SUBS

POST DEVELOPED DRAINAGE MAP

progressive ae

1811 4 Mile Rd NE . Grand Rapids, MI 49525 616.361.2664 www.progressiveae.com

SCOOTER'S COFFEE

1490 WEST ANN ARBOR RD., PLYMOUTH, MI 48170

If this document is sealed and signed in a digital or electronic format and is received from someone other than the sealing professional identified in the document, you must contact the sealing professional in writing to validate authenticity of the document. The sealing professional disclaims the seal and signature and shall not be liable for any liability associated with it where the authenticity of any digital or electronic seal or signature has not been validated in this manner.

ISSUANCE

COUNTY REVIEW
12/22/2021

REVISIONS

NO.	DATE	DESCRIPTION

FILE NUMBER	91880004
PROJECT MANAGER	
PROFESSIONAL	JPM
DRAWN BY	JTS
CHECKED BY	

POST DEVELOPED DRAINAGE MAP

C5.03

12/22/2021 4:12:49 PM
P:\91880004\03 TMP\10 - C5.03 POST-DEVELOPED DRAINAGE MAP.dwg rquinn

THIS DOCUMENT HAS BEEN PREPARED BY PROGRESSIVE AE AS AN INSTRUMENT OF SERVICE, AND PROGRESSIVE AE SHALL RETAIN ALL COMMON LAW, STATUTORY AND OTHER RESERVED RIGHTS, INCLUDING THE COPYRIGHT THERETO.

progressive|ae

Project:	Scooter's Coffee - Brighton
Project #	91880004
Subject:	Stormwater Detention Basin Sizing
Date:	December 22, 2021
Revised:	

Prepared By: JTS
Reviewed By: JPM

Determination of Required Detention Basin Storage
Based on 100-Year Storm Event
Rational Method

Design Information:

Site Information:

Total Area of Proposed Development =	0.39	Acres
Impervious Area of Site =	0.35	Acre
Detention Area =	-	Acre
Pervious Area of Site =	0.04	Acre
Impervious "C" Factor =	0.95	
Detention "C" Factor =	1.00	
Pervious "C" Factor =	0.30	
Weighted "C" Factor for Post-Development Area of Site =	0.89	

Release Rate:

Allowable Release Rate (1.00 cfs/acre) =	0.39	cfs
Actual Release Rate =	0.38	cfs
Infiltration Area of basin bottom & side slopes	-	sft
Plan area of perforated storm sewer piping	0	sft
Design Soil Permeability, 50% of published/tested rate (in/hr)	0.00	in/hr
Release rate due to Soil Infiltration (due to basin bottom, side slopes & perf. pipes)	0.00	cfs
Total Release Rate from basin (Release Rate Allowed + Infiltration Release Rate)	0.38	cfs

(A) Storm Duration (Hours)	(B) Intensity For 100-year Storm* (in/hr)	(C) Inflow Rate (cfs)	(D) Release Rate (cfs)	(E) Stored Rate (cfs)	(F) Reservoir Size (Acre-Feet)
0.17	10	7.43	2.58	0.38	2.20	0.03
0.33	20	5.45	1.89	0.38	1.51	0.04
0.5	30	4.34	1.51	0.38	1.13	0.05
0.67	40	3.64	1.26	0.38	0.88	0.05
0.83	50	3.14	1.09	0.38	0.71	0.05
1	60	2.77	0.96	0.38	0.58	0.05
1.5	90	2.07	0.72	0.38	0.34	0.04
2	120	1.67	0.58	0.38	0.20	0.03
3	180	1.22	0.42	0.38	0.04	0.01
4	240	0.97	0.34	0.38	-0.04	-0.01
5	300	0.81	0.28	0.38	-0.10	-0.04
6	360	0.70	0.24	0.38	-0.14	-0.07
7	420	0.62	0.21	0.38	-0.17	-0.10
8	480	0.55	0.19	0.38	-0.19	-0.13
9	540	0.50	0.17	0.38	-0.21	-0.15
10	600	0.46	0.16	0.38	-0.22	-0.18
12	720	0.40	0.14	0.38	-0.24	-0.24
18	1080	0.28	0.10	0.38	-0.28	-0.42
24	1440	0.22	0.08	0.38	-0.30	-0.61

* i=101/(t+12.33)^0.84

100-Yr Rational Method Required Detention Storage		0.05	acre-feet
	=	**2,145**	Cubic Feet
	=	**79**	**Cubic Yards**
Bankfull Calculation Required Detention Storage		0.05	acre-feet
	=	**2,395**	Cubic Feet
	=	**89**	**Cubic Yards**

Storage Provided Within Underground Detention =		0.06	acre-feet
	=	**2,397**	Cubic Feet
	=	**89**	Cubic Yards
	Total Storage Provided =	**89**	**Cubic Yards**

Project:	SCOOTER'S COFFEE - PLYMOUTH
Project #:	91880004
Subject:	Water Quality
Date:	December 22, 2021
Revised:	

progressive|ae

Prepared By: JTS
Reviewed By: JPM

Detain 1st Flush of runoff:

Site Area =	0.39	acre
	16,988	sft
Relative Impervious Factor C =	0.89	
Pff =	1.00	in

1st Flush Volume = 545 X Pff X Site Acreage X Relative Impervious Factor C

Required 1st Flush Volume =	**189**	**cft**	
Provided Volume in Underground Detention =	**209**	**cft**	At an Elevaiton of: **713.55**
*In isolator row			
Required 1st Flush Volume =	**189**	**cft**	
Provided Volume in Underground Detention =	**295**	**cft**	At an Elevaiton of: **712.38**
*In underground detention system			

Standpipe & Orifice Design:

MH#3 **Diversion Manhole**
*County Standard is to Retain the 1st Flush Volume for 24 Hours

First Flush Storm Volume Elevation =	713.55	ft
Tailwater Orifice Invert =	712.47	ft
Orifice Diameter =	**1**	**in**

*1-inch orifice used for maintenance purposes

Orifice Flow: Qp = 0.62a(2gH)^0.5
Qp = principal flow rate (cfs)
a = flow area of orifice or pipe (sft)
H = design hydraulic head (ft)
g = gravitational constant (32.2 ft/s^2)

a =	0.0055	sft
H =	1.04	ft
Qp=	0.03	cfs
1st Flush Volume =	209	cft
Number of Orifices	**1**	
Total Orifice Flow =	0.03	cfs
Detention Duration=Volume/Flow =	**2.1**	**hrs**

MH#2 **Control Manhole**
*County Standard is to Retain the 1st Flush Volume for 24 Hours

First Flush Storm Volume Elevation =	712.38	ft
Tailwater Orifice Invert =	711.80	ft
Orifice Diameter =	**1**	**in**

*1-inch orifice used for maintenance purposes

Orifice Flow: Qp = 0.62a(2gH)^0.5
Qp = principal flow rate (cfs)
a = flow area of orifice or pipe (sft)
H = design hydraulic head (ft)
g = gravitational constant (32.2 ft/s^2)

a =	0.0055	sft
H =	0.54	ft
Qp=	0.02	cfs
1st Flush Volume =	295	cft
Number of Orifices	**1**	
Total Orifice Flow =	0.02	cfs
Detention Duration=Volume/Flow =	**4.1**	**hrs**

Project:	SCOOTER'S COFFEE - PLYMOUTH
Project #:	91880004
Subject:	Bankfull
Date:	December 22, 2021
Revised:	

progressive|ae

Prepared By: JTS
Reviewed By: JPM

Detention Pond 1
Channel Protection

Site Area =	0.39	acre
	16,988	sft
Relative Impervious Factor C =	0.89	

Bankfull Volume = 6,897 X Site Acreage X Relative Impervious Factor C

Required Bankfull Volume =	**2395**	**cft**	
Provided Bankfull Volume =	**2397**	**cft**	At an Elevation of: **715.30**

Standpipe & Orifice Design:

MH#2
*County Standard is to Retain the Bankfull Volume for 48 Hours

Flood Protection Orifice Invert =	714.80	ft
Orifice Invert =	711.80	ft
Orifice Diameter =	**1**	**in**

*1-inch orifice used for maintenance purposes

Orifice Flow: Qp = 0.62a(2gH)^0.5
Qp = principal flow rate (cfs)
a = flow area of orifice or pipe (sft)
H = design hydraulic head (ft)
g = gravitational constant (32.2 ft/s^2)

a =	0.0055	sft
H =	2.96	ft
Qp=	0.05	cfs
Chanel Protection Volume =	2397	cft
Number of Orifices	**1**	
Total Orifice Flow =	0.05	cfs
Detention Duration=Volume/Flow =	**14.3**	**hrs**

Project:	SCOOTER'S COFFEE - PLYMOUTH
Project #:	91880004
Subject:	Outlet Design
Date:	December 22, 2021
Revised:	

progressive|ae

Prepared By: JTS
Reviewed By: JPM

LOW FLOW

ALLOWABLE LOW FLOW RELEASE RATE:

Allowable Release Rate =	1.00	cfs/acre
Area =	0.39	acre
Total Allowable Release Rate=	**0.39**	**cfs**
Allowable Release Rate*Area		

Low Flow Outlet Through Pipe to Outlet Structure: See Detail:

Flow Rate from 1st Flush/Bankfull Orifice:

Spillway Overflow Elev. =	715.30	ft
Orifice Invert =	711.8	ft
Orifice Diameter =	1	in

*1-inch orifice used for maintenance purposes

Orifice Flow: Qp = 0.62a(2gH)^0.5
Qp = principal flow rate (cfs)
a = flow area of orifice or pipe (sft)
H = design hydraulic head (ft)
g = gravitational constant (32.2 ft/s^2)

a =	0.0055	sft
H =	3.46	ft
Q=	**0.05**	**cfs**

Flow Rate from Flood Control Orifice:

Spillway Overflow Elev. =	715.30	ft
Orifice Invert =	714.80	ft
Orifice Width =	3.2	in
Orifice Height=	6	in

Orifice Flow: Qp = 0.62a(2gH)^0.5
Qp = principal flow rate (cfs)
a = flow area of orifice or pipe (sft)
H = design hydraulic head (ft)
g = gravitational constant (32.2 ft/s^2)

a =	0.1333	sft
H =	0.25	ft
Q=	**0.33**	**cfs**

Design Release Rate (Sum of all Flows), Q =	**0.38 cfs**

Storm-Drainage Design Summary - Rational Method

progressive|ae

Project Name:	SCOOTER'S COFFEE - PLYMOUTH	**Designed By:**	JTS
Project #:	91880004	**Date:**	12/22/2021
Project Location:	WAYNE COUNTY, MICHIGAN	**Modified:**	

Checked By: JPM
Date:

Design Assumptions:
Manning's Equation where n = 0.013 Concrete Pipe
Design Storm = 10-Year
ALL NON-SHADED CELLS ARE INPUT CELLS.

Min Tc = 10.00 min

1	2	3	4	5	6	7	8	9	10	11	12	13	14	15	16	17	18	19	20	21	22	23	24	25	26	27	28	29	30
Proposed Pipe Network									Drainage Areas & C		Design Flow					Full Flow Conditions				Hydraulic Grade Line Elevation							Actual Flow Conditions		
Upper Structure ID	Lower Structure ID	Pipe Diameter (in)	Pipe Length (ft)	Design Slope of Pipe (S)	Upper Invert Elevation	Lower Invert Elevation	Upper Rim Elevation	Lower Rim Elevation	Inlet Drainage Area (acres)	Weighted Runoff Coefficient "C"	Time of Concentration (min)	Inlet C x A	Sum of C x A	Rainfall Intensity I=63/(t+12.33)^0.84 (in/hr)	Total Runoff Design Flow (cfs)	Flowing Full Pipe Capacity Q=C1x5^(8/3) (cfs)	Manning's "C1" Factor (1.49/n) x Ax5^(2/3)	Velocity (ft/s)	Time of Flow (min)	Slope of Energy Grade Line (ft/ft)	Frictional Losses (ft)	Minor Losses 1/2(V^2/2g) (ft)	Total Hydraulic Head Loss (ft)	HGL Upper	* HGL Lower	Depth of Hydraulic Grade Line below Upper Rim Elevation	Velocity (ft/s)	Depth of Flow (feet)	Percent Full (D/do)
MH#2	MH#1	12	34	0.68%	711.80	711.57	716.41	716.00	0.00	0.00	10.00	0.00	0.00	4.64	1.55	2.94	35.63	3.74	0.15	0.002	0.064	0.109	0.173	712.24	712.07	4.17	3.74	0.50	50.00%
MH#1	EX. MH	12	36	2.78%	711.50	710.00	716.00	715.45	0.00	0.00	10.15	0.00	0.00	4.61	1.55	5.94	35.63	7.56	0.08	0.002	0.068	0.267	0.335	710.63	710.30	5.37	5.86	0.30	30.00%
CB#7	MH#5	12	45	0.32%	712.75	712.61	716.10	716.78	0.08	0.92	10.00	0.07	0.07	4.64	0.33	2.02	35.63	2.57	0.29	0.000	0.004	0.025	0.029	712.89	712.86	3.21	1.80	0.25	25.00%
MH#6	MH#4	12	18	0.32%	712.61	712.55	716.78	716.44	0.00	0.00	10.29	0.00	0.07	4.59	0.33	2.02	35.63	2.57	0.12	0.000	0.002	0.025	0.027	712.83	712.80	3.95	1.80	0.25	25.00%
MH#4	MH#3	12	6	0.83%	712.55	712.50	716.44	716.51	0.00	0.00	11.07	0.00	0.35	4.46	1.55	3.25	35.63	4.13	0.02	0.002	0.011	0.120	0.131	709.98	709.85	6.46	3.93	0.45	45.00%
CB#5	MH#4	12	27	0.32%	712.64	712.55	716.35	716.44	0.10	0.87	10.00	0.09	0.09	4.64	0.40	2.02	35.63	2.57	0.18	0.000	0.003	0.025	0.028	712.83	712.80	3.52	1.80	0.25	25.00%
CB#11	CB#10	12	24	0.32%	713.20	713.13	717.10	716.30	0.05	0.91	10.00	0.05	0.05	4.64	0.22	2.02	35.63	2.57	0.16	0.000	0.001	0.019	0.020	713.35	713.33	3.75	1.57	0.20	20.00%
CB#10	CB#9	12	42	0.32%	713.13	712.99	716.30	716.25	0.02	0.87	10.16	0.02	0.07	4.61	0.30	2.02	35.63	2.57	0.27	0.000	0.003	0.025	0.028	713.27	713.24	3.03	1.80	0.25	25.00%
CB#9	MH#8	12	95	0.32%	712.99	712.69	716.25	717.00	0.07	0.91	10.43	0.06	0.13	4.56	0.58	2.02	35.63	2.57	0.62	0.000	0.025	0.036	0.061	713.10	713.04	3.15	2.16	0.35	35.00%
MH#8	MH#7	12	43	0.32%	712.69	712.55	717.00	716.44	0.00	0.00	11.05	0.00	0.19	4.46	0.85	2.02	35.63	2.57	0.28	0.001	0.024	0.041	0.066	713.02	712.95	3.98	2.31	0.40	40.00%
CB#13	MH#12	12	43	0.32%	713.40	713.26	716.61	718.31	0.06	0.84	10.00	0.05	0.05	4.64	0.23	2.03	35.63	2.58	0.28	0.000	0.002	0.019	0.021	713.48	713.46	3.13	1.58	0.20	20.00%
MH#12	MH#8	12	62	0.32%	713.26	713.06	718.31	717.00	0.02	0.95	10.28	0.01	0.06	4.59	0.29	2.02	35.63	2.57	0.40	0.000	0.004	0.019	0.023	713.28	713.26	5.03	1.57	0.20	20.00%
									Total Drainage Area = 0.39		Total CxA = Weighted Site "C" =	0.35 0.89					Manning's "C1" Factor = (1.49/n) x (A) x (R^(2/3)) Q = "C1" x S^(1/2)									* Starting HGL is set based on crest of pipe entering underground detention * HGL is max value of downstream HGL or actual flow elevation.			

Project: #91880004 Scooter's Coffee - Plymouth

StormTech SC-740 Chamber System

Chamber Model -	SC-740	
Units -	Imperial	Click Units for Metric
Number of chambers -	32	
Voids in the stone (porosity) -	40	%
Base of Stone Elevation -	711.80	ft
Amount of Stone Above Chambers -	6	in
Amount of Stone Below Chambers -	6	in

Include Perimeter Stone in Calculations

Height of System (inches)	Incremental Single Chamber (cubic feet)	Incremental Total Chamber (cubic feet)	Incremental Stone (cubic feet)	Incremental Ch & St (cubic feet)	Cumulative Chamber (cubic feet)	Elevation (feet)
42	**0.00**	**0.00**	**36.06**	**36.06**	**2206.68**	**715.30**
41	0.00	0.00	36.06	36.06	2360.63	715.22
40	0.00	0.00	36.06	36.06	2324.57	715.13
39	0.00	0.00	36.06	36.06	2288.51	715.05
38	0.00	0.00	36.06	36.06	2252.45	714.97
37	0.00	0.00	36.06	36.06	2216.39	714.88
36	0.05	1.76	35.35	37.11	2180.34	714.80
35	0.16	5.21	33.97	39.19	2143.22	714.72
34	0.28	9.02	32.45	41.47	2104.04	714.63
33	0.60	19.33	28.33	47.65	2062.57	714.55
32	0.80	25.65	25.80	51.45	2014.91	714.47
31	0.95	30.42	23.89	54.31	1963.46	714.38
30	1.07	34.38	22.30	56.69	1909.15	714.30
29	1.18	37.78	20.95	58.72	1852.46	714.22
28	1.27	40.50	19.86	60.36	1793.74	714.13
27	1.36	43.36	18.71	62.07	1733.38	714.05
26	1.45	46.53	17.45	63.98	1671.31	713.97
25	1.52	48.79	16.54	65.33	1607.33	713.88
24	1.58	50.63	15.80	66.44	1542.00	713.80
23	1.64	52.55	15.04	67.59	1475.56	713.72
22	1.70	54.38	14.30	68.69	1407.97	713.63
21	1.75	56.09	13.62	69.71	1339.28	713.55
20	1.80	57.69	12.98	70.67	1269.57	713.47
19	1.85	59.36	12.31	71.67	1198.90	713.38
18	1.89	60.58	11.83	72.41	1127.22	713.30
17	1.93	61.89	11.30	73.19	1054.82	713.22
16	1.97	63.20	10.78	73.98	981.63	713.13
15	2.01	64.32	10.33	74.65	907.65	713.05
14	2.04	65.44	9.88	75.32	833.00	712.97
13	2.07	66.40	9.50	75.90	757.68	712.88
12	2.10	67.36	9.11	76.47	681.78	712.80
11	2.13	68.22	8.77	76.99	605.31	712.72
10	2.15	68.92	8.49	77.41	528.32	712.63
9	2.18	69.67	8.19	77.86	450.91	712.55
8	2.20	70.35	7.92	78.27	373.05	712.47
7	**2.21**	**70.63**	**7.80**	**78.44**	**294.79**	**712.38**
6	0.00	0.00	36.06	36.06	216.35	712.30
5	0.00	0.00	36.06	36.06	180.29	712.22
4	0.00	0.00	36.06	36.06	144.23	712.13
3	0.00	0.00	36.06	36.06	108.17	712.05
2	0.00	0.00	36.06	36.06	72.12	711.97
1	0.00	0.00	36.06	36.06	36.06	711.88

Project: #91880004 Scooter's Coffee - Plymouth

StormTech SC-740 Chamber System

Chamber Model -	SC-740	
Units -	Imperial	Click Units for Metric
Number of chambers -	5	
Voids in the stone (porosity) -	40	%
Base of Stone Elevation -	711.80	ft
Amount of Stone Above Chambers -	6	in
Amount of Stone Below Chambers -	6	in

Include Perimeter Stone in Calculations

Height of System (inches)	Incremental Single Chamber (cubic feet)	Incremental Total Chamber (cubic feet)	Incremental Stone (cubic feet)	Incremental Ch & St (cubic feet)	Cumulative Chamber (cubic feet)	Elevation (feet)
42	0.00	0.00	5.63	5.63	374.48	715.30
41	0.00	0.00	5.63	5.63	368.85	715.22
40	0.00	0.00	5.63	5.63	363.21	715.13
39	0.00	0.00	5.63	5.63	357.58	715.05
38	0.00	0.00	5.63	5.63	351.95	714.97
37	0.00	0.00	5.63	5.63	346.31	714.88
36	0.05	0.27	5.52	5.80	340.68	714.80
35	0.16	0.81	5.31	6.12	334.88	714.72
34	0.28	1.41	5.07	6.48	328.76	714.63
33	0.60	3.02	4.43	7.45	322.28	714.55
32	0.80	4.01	4.03	8.04	314.83	714.47
31	0.95	4.75	3.73	8.49	306.79	714.38
30	1.07	5.37	3.49	8.86	298.30	714.30
29	1.18	5.90	3.27	9.18	289.45	714.22
28	1.27	6.33	3.10	9.43	280.27	714.13
27	1.36	6.78	2.92	9.70	270.84	714.05
26	1.45	7.27	2.73	10.00	261.14	713.97
25	1.52	7.62	2.58	10.21	251.15	713.88
24	1.58	7.91	2.47	10.38	240.94	713.80
23	1.64	8.21	2.35	10.56	230.56	713.72
22	1.70	8.50	2.24	10.73	220.00	713.63
21	**1.75**	**8.76**	**2.13**	**10.89**	**209.26**	**713.55**
20	1.80	9.01	2.03	11.04	198.37	713.47
19	1.85	9.27	1.92	11.20	187.33	713.38
18	1.89	9.47	1.85	11.31	176.13	713.30
17	1.93	9.67	1.77	11.44	164.82	713.22
16	1.97	9.87	1.68	11.56	153.38	713.13
15	2.01	10.05	1.61	11.66	141.82	713.05
14	2.04	10.22	1.54	11.77	130.16	712.97
13	2.07	10.37	1.48	11.86	118.39	712.88
12	2.10	10.52	1.42	11.95	106.53	712.80
11	2.13	10.66	1.37	12.03	94.58	712.72
10	2.15	10.77	1.33	12.10	82.55	712.63
9	2.18	10.89	1.28	12.17	70.45	712.55
8	2.20	10.99	1.24	12.23	58.29	712.47
7	2.21	11.04	1.22	12.26	46.06	712.38
6	0.00	0.00	5.63	5.63	33.80	712.30
5	0.00	0.00	5.63	5.63	28.17	712.22
4	0.00	0.00	5.63	5.63	22.54	712.13
3	0.00	0.00	5.63	5.63	16.90	712.05
2	0.00	0.00	5.63	5.63	11.27	711.97
1	0.00	0.00	5.63	5.63	5.63	711.88

progressive|ae

SCOOTER'S COFFEE

1490 WEST ANN ARBOR RD., PLYMOUTH, MI 48170

1811.4 Mile Rd NE | Grand Rapids, MI 49525 616.361.2664 www.progressivaea.com

If this document is sealed and signed in a digital or electronic format and is received from someone other than the sealing professional identified in the document, you must contact the sealing professional in writing to validate authenticity of the document. The sealing professional disclaims the seal and signature and shall not be liable for any liability associated with it where the authenticity of any digital or electronic seal or signature has not been validated in this manner.

ISSUANCE
COUNTY REVIEW
12/22/2021

REVISIONS
NO. DATE DESCRIPTION

FILE NUMBER	91880004
PROJECT MANAGER	
PROFESSIONAL	JPM
DRAWN BY	JTS
CHECKED BY	

STORMWATER CALCULATIONS
C5.04

12/22/2021 5:12:26 PM
P:\91880004\CAD\91880004 SWP10 - C5.04 STORMWATER CALCULATIONS.dwg rsculthwaite
THIS DOCUMENT HAS BEEN PREPARED BY PROGRESSIVE A/E AS AN INSTRUMENT OF SERVICE. AND PROGRESSIVE A/E SHALL RETAIN ALL COMMON LAW, STATUTORY AND OTHER RESERVED RIGHTS, INCLUDING THE COPYRIGHT THERETO.

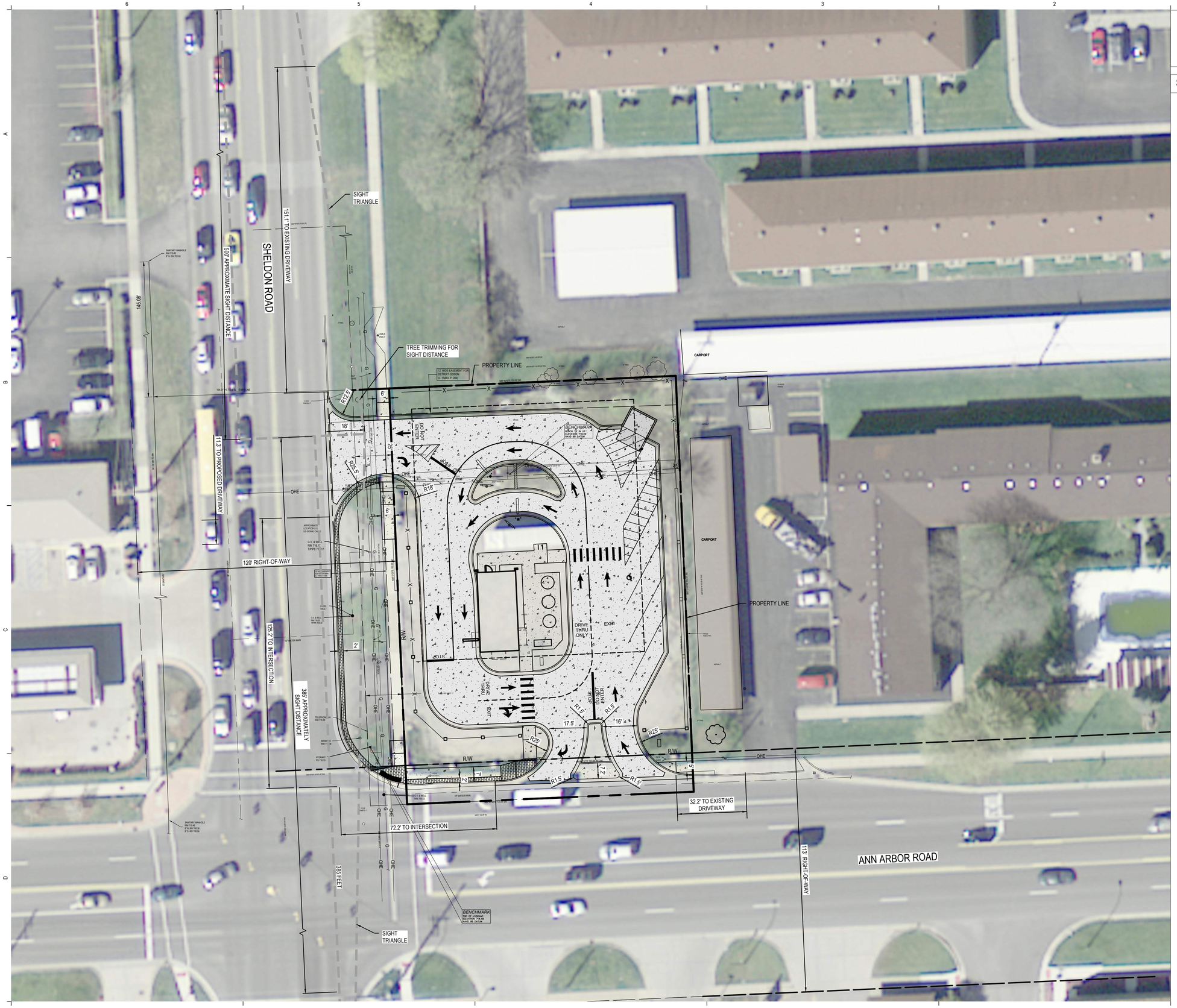

NORTH

RIGHT OF WAY PERMIT PLAN

1"= 20' 0 20'

CALL 811 NOTE:

CONTRACTOR TO CONTACT 811 SERVICE AT LEAST 3 WORKING DAYS PRIOR TO CONSTRUCTION, TO CONFIRM LOCATION OF EXISTING UTILITIES. DIAL 811.

www.CALL811.com

SIGHT DISTANCE PER AASHTO

CRITERIA:

CASE B - INTERSECTION WITH STOP CONTROL ON THE MINOR ROAD

CASE B1 - LEFT TURNS FROM THE MINOR ROAD
SSD 500 FT. @ 40 MPH

CASE B2 - RIGHT TURNS FROM THE MINOR ROAD
SSD 385 FT. @ 40 MPH

DECISION POINT 18.0 FT FROM EDGE OF THE MAJOR-ROAD TRAVELED WAY.

progressive ae

1811 4 Mile Rd NE Grand Rapids, MI 49525 616.361.2664 www.progressiveae.com

SCOOTER'S COFFEE

1490 WEST ANN ARBOR RD., PLYMOUTH, MI 48170

If this document is sealed and signed in a digital or electronic format and is received from someone other than the sealing professional identified in this document, you must contact the sealing professional in writing to validate authenticity of the document. The sealing professional disclaims the seal and signature and shall not be liable for any liability associated with it where the authenticity of any digital or electronic seal or signature has not been validated in this manner.

ISSUANCE

COUNTY REVIEW

12/22/2021

REVISIONS

NO.	DATE	DESCRIPTION

FILE NUMBER	91880004
PROJECT MANAGER	
PROFESSIONAL	JPM
DRAWN BY	AQA
CHECKED BY	

RIGHT OF WAY PERMIT PLAN

C6.00

12/22/2021 4:14:47 PM
P:\91880004\03 WP\10 - C6.00 - RIGHT OF WAY PERMIT PLAN.dwg southmill

THIS DOCUMENT HAS BEEN PREPARED BY PROGRESSIVE AE AS AN INSTRUMENT OF SERVICE, AND PROGRESSIVE AE SHALL RETAIN ALL COMMON LAW, STATUTORY AND OTHER RESERVED RIGHTS, INCLUDING THE COPYRIGHT THERETO.

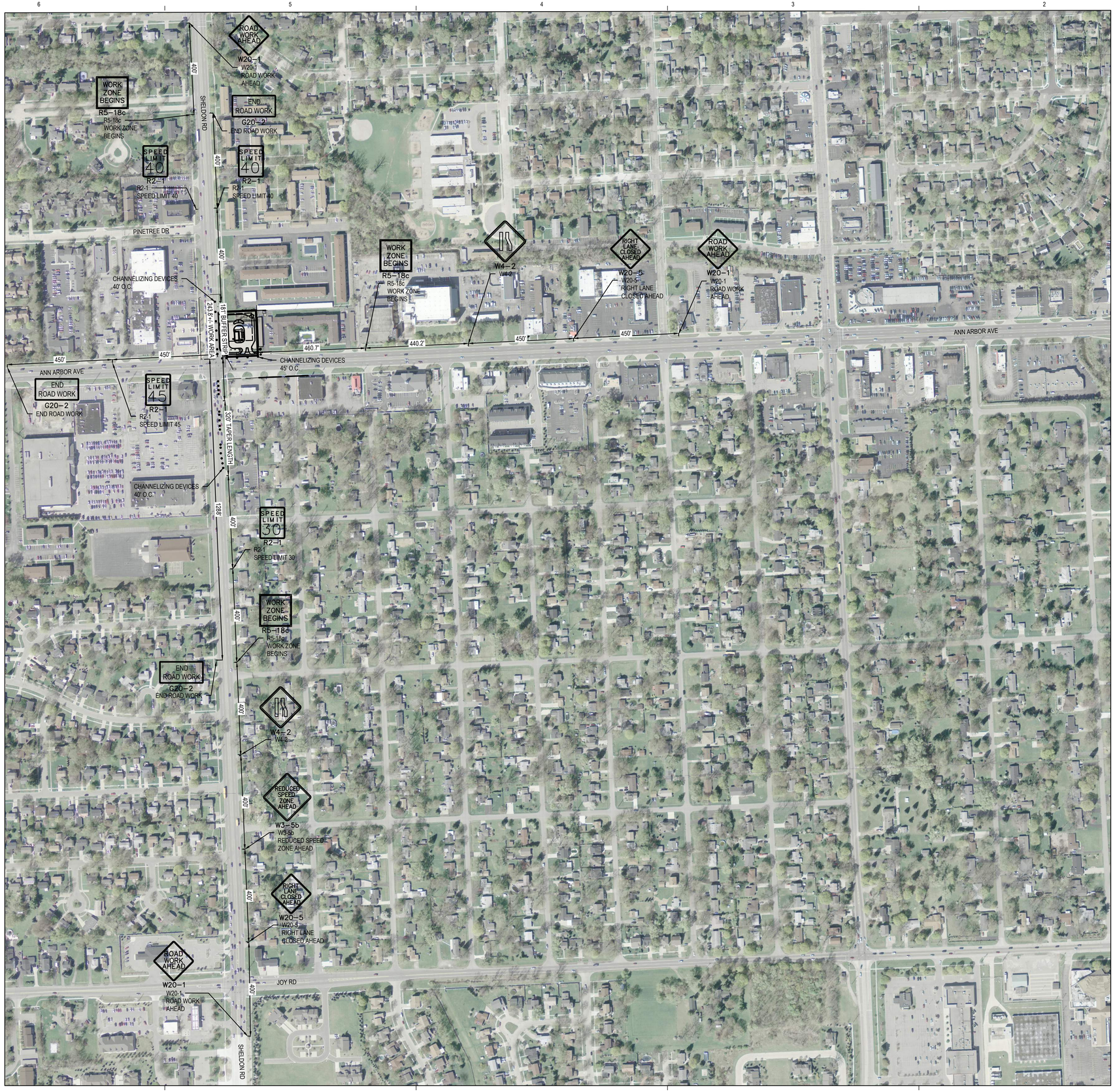

TRAFFIC CONTROL PLAN

1"= 200' 0 200'

NORTH

progressive ae

SCOOTER'S COFFEE

1490 WEST ANN ARBOR RD., PLYMOUTH, MI 48170

18111 4 Mile Rd NE | Grand Rapids, MI 49525 616.361.2664 www.progressiveae.com

If this document is sealed and signed in a digital or electronic format and is received from someone other than the sealing professional identified in the document, you must contact the sealing professional in writing to validate authenticity of the document. The sealing professional disclaims the seal and signature and shall not be liable for any liability associated with it where the authenticity of any digital or electronic seal or signature has not been validated in this manner.

ISSUANCE

COUNTY REVIEW

12/22/2021

REVISIONS

NO.	DATE	DESCRIPTION

FILE NUMBER	91880004
PROJECT MANAGER	
PROFESSIONAL	JPM
DRAWN BY	JTS
CHECKED BY	

TRAFFIC CONTROL PLAN

C6.01

12/22/2021 3:49:29 PM
P:\91880004\20 WP\10 - CD\01 - TRAFFIC CONTROL PLAN.dwg jaquinas

THIS DOCUMENT HAS BEEN PREPARED BY PROGRESSIVE AE AS AN INSTRUMENT OF SERVICE, AND PROGRESSIVE AE SHALL RETAIN ALL COMMON LAW, STATUTORY AND OTHER RESERVED RIGHTS, INCLUDING THE COPYRIGHT THERETO.

DISTANCE BETWEEN TRAFFIC SIGNS, "D"

"D" DISTANCES	POSTED SPEED LIMIT, MPH (PRIOR TO WORK AREA)										
	25	30	35	40	45	50	55	60	65	70	75
D (FEET)	250	300	350	400	450	500	550	600	650	700	750

GUIDELINES FOR LENGTH OF LONGITUDINAL BUFFER SPACE, "B"

"B" LENGTHS	SPEED* MPH (PRIOR TO WORK AREA)											
	20	25	30	35	40	45	50	55	60	65	70	75
B (FEET)	33	50	83	132	181	230	279	329	411	476	542	625

* POSTED SPEED, OFF-PEAK 85TH PERCENTILE SPEED PRIOR TO WORK STARTING, OR THE ANTICIPATED OPERATING SPEED.

MINIMUM MERGING TAPER LENGTH, "L" (FEET)

OFFSET (FEET)	POSTED SPEED LIMIT, MPH (PRIOR TO WORK AREA)										
	25	30	35	40	45	50	55	60	65	70	75
1	11	15	21	27	45	50	55	60	65	70	75
2	21	30	41	54	90	100	110	120	130	140	150
3	32	45	62	80	135	150	165	180	195	210	225
4	42	60	82	107	180	200	220	240	260	280	300
5	53	75	103	134	225	250	275	300	325	350	375
6	63	90	123	160	270	300	330	360	390	420	450
7	73	105	143	187	315	350	385	420	455	490	525
8	84	120	164	214	360	400	440	480	520	560	600
9	94	135	184	240	405	450	495	540	585	630	675
10	105	150	205	267	450	500	550	600	650	700	750
11	115	165	225	294	495	550	605	660	715	770	825
12	125	180	245	320	540	600	660	720	780	840	900
13	136	195	266	347	585	650	715	780	845	910	975
14	146	210	286	374	630	700	770	840	910	980	1050
15	157	225	307	400	675	750	825	900	975	1050	1125

NOT TO SCALE

MDOT Michigan Department of Transportation — NOT TO SCALE — WORK ZONE TRAFFIC CONTROL TYPICAL — NO: 101-GEN-SPACING-CHARTS — "B", "D" AND "L" TABLES, CHANNELIZING DEVICE SPACING, SIGN BORDER KEY, AND ROLL-AHEAD SPACING — DATE: NOV 2020 — SHEET: 1 OF 3

FILE: 101-GEN-SPACING-CHARTS.dgn

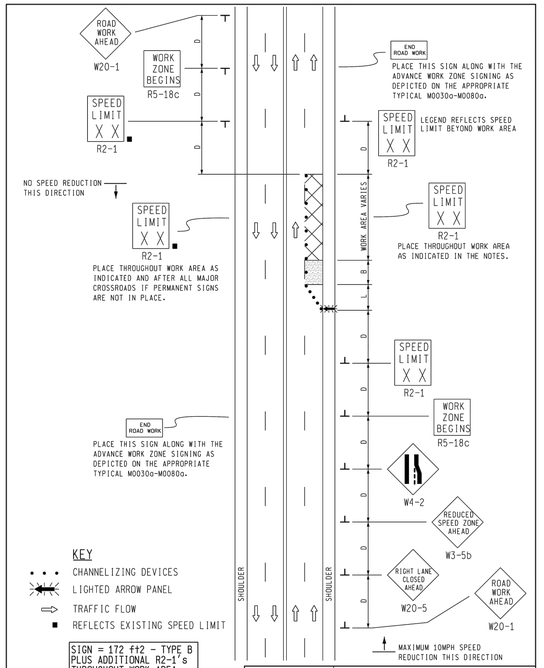

MDOT Michigan Department of Transportation — TRAFFIC AND SAFETY — MAINTAINING TRAFFIC TYPICAL — TYPICAL TEMPORARY TRAFFIC CONTROL FOR A ONE-LANE CLOSURE ON AN UNDIVIDED MULTI-LANE ROADWAY USING A SINGLE STEP DOWN IN SPEED LIMIT IN ONE DIRECTION ONLY

DRAWN BY: CON:AE:djf | OCTOBER 2011 | M0250a | SHEET 1 OF 2
CHECKED BY: BMH:CRB | PLAN DATE:
FILE: P:\ RD/TS/Typicals/Signs/MT NON FWY/M0250a.dgn REV. 10/11/2011

NOT TO SCALE

NOTES

1B. D = DISTANCE BETWEEN TRAFFIC CONTROL DEVICES
L = MINIMUM LENGTH OF TAPER
B = LENGTH OF LONGITUDINAL BUFFER
SEE M0020a FOR "D," "L," AND "B" VALUES

2. ALL NON-APPLICABLE SIGNING WITHIN THE CIA SHALL BE MODIFIED TO FIT CONDITIONS, COVERED OR REMOVED.

3. DISTANCES BETWEEN SIGNS, THE VALUES FOR WHICH ARE SHOWN IN TABLE D, ARE APPROXIMATE AND MAY NEED ADJUSTING AS DIRECTED BY THE ENGINEER.

3A. THE "WORK ZONE BEGINS" (R5-18c) SIGN SHALL BE USED ONLY IN THE INITIAL SIGNING SEQUENCE IN THE WORK ZONE. SUBSEQUENT SEQUENCES IN THE SAME WORK ZONE SHALL OMIT THIS SIGN AND THE QUANTITIES SHALL BE ADJUSTED APPROPRIATELY.

4E. THE MAXIMUM RECOMMENDED DISTANCE(S) BETWEEN CHANNELIZING DEVICES SHOULD BE EQUAL IN FEET TO THE POSTED SPEED IN MILES PER HOUR ON TAPER(S) AND TWICE THE POSTED SPEED IN THE PARALLEL AREA(S).

5. FOR OVERNIGHT CLOSURES, TYPE III BARRICADES SHALL BE LIGHTED.

6. WHEN CALLED FOR IN THE FHWA ACCEPTANCE LETTER FOR THE SIGN SYSTEM SELECTED, THE TYPE A WARNING FLASHER, SHOWN ON THE WARNING SIGNS, SHALL BE POSITIONED ON THE SIDE OF THE SIGN NEAREST THE ROADWAY.

7. ALL TEMPORARY SIGNS, TYPE III BARRICADES, THEIR SUPPORT SYSTEMS AND LIGHTING REQUIREMENTS SHALL MEET NCHRP 350 CRASHWORTHY REQUIREMENTS STIPULATED IN THE CURRENT EDITION OF THE MICHIGAN MANUAL ON UNIFORM TRAFFIC CONTROL DEVICES, THE CURRENT EDITION OF THE STANDARD SPECIFICATIONS FOR CONSTRUCTION, THE STANDARD PLANS AND APPLICABLE SPECIAL PROVISIONS. ONLY DESIGNS AND MATERIALS APPROVED BY MDOT WILL BE ALLOWED.

8. WHEN BUFFER AREAS ARE ESTABLISHED, THERE SHALL BE NO EQUIPMENT OR MATERIALS STORED OR WORK CONDUCTED IN THE BUFFER AREA.

16A. ADDITIONAL SPEED LIMIT SIGNS REFLECTING THE REDUCED SPEED SHALL BE PLACED AFTER EACH MAJOR CROSSROAD THAT INTERSECTS THE WORK AREA WHERE THE REDUCED SPEED IS IN EFFECT, AND AT INTERVALS ALONG THE ROADWAY SUCH THAT NO SPEED LIMIT SIGNS REFLECTING THE REDUCED SPEED ARE MORE THAN TWO MILES APART.

16B. WHEN REDUCED SPEED LIMITS ARE UTILIZED IN THE WORK AREA, ADDITIONAL SPEED LIMIT SIGNS RETURNING TRAFFIC TO ITS NORMAL SPEED SHALL BE PLACED BEYOND THE LIMITS OF THE REDUCED SPEED AS INDICATED.

16E. WHEN EXISTING SPEED LIMITS ARE REDUCED MORE THAN 10 MPH, THE SPEED LIMIT SHALL BE STEPPED DOWN IN NO MORE THAN 10 MPH INCREMENTS.

21. ALL EXISTING PAVEMENT MARKINGS WHICH ARE IN CONFLICT WITH EITHER PROPOSED CHANGES IN TRAFFIC PATTERNS OR PROPOSED TEMPORARY TRAFFIC MARKINGS, SHALL BE REMOVED BEFORE ANY CHANGE IS MADE IN THE TRAFFIC PATTERN. EXCEPTION WILL BE MADE FOR DAYTIME-ONLY TRAFFIC PATTERNS THAT ARE ADEQUATELY DELINEATED BY OTHER TRAFFIC CONTROL DEVICES.

26. THE LIGHTED ARROW PANEL SHALL BE LOCATED AT THE BEGINNING OF THE TAPER AS SHOWN. WHEN PHYSICAL LIMITATIONS RESTRICT ITS PLACEMENT AS INDICATED, THEN IT SHALL BE PLACED AS CLOSE TO THE BEGINNING OF THE TAPER AS POSSIBLE.

SIGN SIZES

DIAMOND WARNING	- 48" x 48"
RECTANGULAR REGULATORY	- 48" x 60"
R5-18c REGULATORY	- 48" x 48"

NOT TO SCALE

MDOT Michigan Department of Transportation — TRAFFIC AND SAFETY — MAINTAINING TRAFFIC TYPICAL — TYPICAL TEMPORARY TRAFFIC CONTROL FOR A ONE-LANE CLOSURE ON AN UNDIVIDED MULTI-LANE ROADWAY USING A SINGLE STEP DOWN IN SPEED LIMIT IN ONE DIRECTION ONLY

DRAWN BY: CON:AE:djf | OCTOBER 2011 | M0250a | SHEET 2 OF 2
CHECKED BY: BMH:CRB | PLAN DATE:
FILE: P:\ RD/TS/Typicals/Signs/MT NON FWY/M0250a.dgn REV. 10/11/2011

NOT TO SCALE

THE FOLLOWING NOTES APPLY IF CALLED FOR ON THE TRAFFIC CONTROL TYPICAL

GENERAL NOTES

G1: SEE GEN-SPACING-CHARTS FOR COMMON VALUES INCLUDING:
D = DISTANCE BETWEEN TRAFFIC CONTROL DEVICES
L = MINIMUM LENGTH OF TAPER
B = LENGTH OF LONGITUDINAL BUFFER
ROLL AHEAD DISTANCE

G2: DISTANCE BETWEEN SIGNS, "D", THE VALUES FOR WHICH ARE SHOWN IN TYPICAL GEN-KEY ARE APPROXIMATE AND MAY NEED ADJUSTING AS DIRECTED BY THE ENGINEER.

G3: ALL TEMPORARY SIGNS, TYPE III BARRICADES, THEIR SUPPORT SYSTEMS AND LIGHTING MUST MEET NATIONAL COOPERATIVE HIGHWAY RESEARCH PROGRAM REPORT 350 (NCHRP 350) TEST LEVEL 3, OR MANUAL FOR ASSESSING SAFETY HARDWARE (MASH) TL-3 AS WELL AS THE CURRENT EDITION OF THE MICHIGAN MANUAL ON UNIFORM TRAFFIC CONTROL DEVICES, THE CURRENT EDITION OF THE STANDARD SPECIFICATIONS FOR CONSTRUCTION, THE STANDARD PLANS AND APPLICABLE SPECIAL PROVISIONS. ONLY DESIGNS AND MATERIALS APPROVED BY MDOT WILL BE ALLOWED.

G4: DO NOT STORE EQUIPMENT, MATERIALS OR PERFORM WORK IN ESTABLISHED BUFFER AREAS.

G5: ALL EXISTING PAVEMENT MARKINGS WHICH ARE IN CONFLICT WITH EITHER PROPOSED CHANGES IN TRAFFIC PATTERNS OR PROPOSED TEMPORARY TRAFFIC MARKINGS SHALL BE REMOVED BEFORE ANY CHANGE IS MADE IN THE TRAFFIC PATTERN. EXCEPTION WILL BE MADE FOR TRAFFIC PATTERNS FOR WORK LESS THAN THREE DAYS THAT ARE ADEQUATELY DELINEATED BY OTHER TRAFFIC CONTROL DEVICES.

SIGN NOTES

S1: ALL NON-APPLICABLE SIGNING WITHIN THE CIA MUST BE MODIFIED TO FIT CONDITIONS, COVERED, OR REMOVED. FOR GUIDANCE SEE THE WORK ZONE SAFETY AND MOBILITY MANUAL, SECTIONS 6.01.09 AND 6.01.10.

S2: R5-18b SIGNS ARE ONLY REQUIRED ON FREEWAY PROJECTS WITH A DURATION OF 15 DAYS OR LONGER OR NON-FREEWAY PROJECTS WITH A DURATION OF 90 DAYS OR LONGER. TO APPLY THIS TYPICAL WITHOUT R5-18b SIGNS, REMOVE THE SIGNS AND CONSOLIDATE THE SEQUENCE AS APPROPRIATE.

S3: R5-18c IS ONLY REQUIRED IN THE INITIAL SIGNING SEQUENCE IN THE WORK ZONE. OMIT THIS SIGN IN SUBSEQUENT SEQUENCES IN THE SAME WORK ZONE.

S4: ADDITIONAL SIGNING AND/OR ELONGATED SIGNING SEQUENCES SHOULD BE USED WHEN TRAFFIC VOLUMES ARE SIGNIFICANT ENOUGH TO CREATE BACKUPS BEYOND THE W20-5 SIGNS.

S5: PLACE ADDITIONAL SPEED LIMIT SIGNS REFLECTING THE WORK ZONE SPEED AFTER EACH MAJOR CROSSROAD THAT INTERSECTS THE WORK ZONE, OR AFTER EACH ENTRANCE RAMP THAT COMES ONTO THE FREEWAY WHERE THE REDUCED SPEED IS IN EFFECT. PLACE ADDITIONAL SPEED LIMIT SIGNS AT INTERVALS ALONG THE ROADWAY SUCH THAT NO SPEED LIMIT SIGNS ARE MORE THAN 2 MILES APART. WHEN REDUCED SPEED LIMITS ARE UTILIZED IN THE WORK AREA, PLACE ADDITIONAL SPEED LIMIT SIGNS RETURNING TRAFFIC TO ITS NORMAL SPEED BEYOND THE LIMITS OF THE WORK AREA AS INDICATED. IF PERMANENT SIGNS DISPLAYING THE CORRECT SPEED LIMIT ARE POSTED, OMIT ALL W3-5b AND R2-1 SIGNS AND REDUCE SPACING ACCORDINGLY.

S6: FABRICATE SPECIAL SIGNS IN ACCORDANCE WITH CURRENT SIGNING DESIGN STANDARDS.

S7: PLACE ADDITIONAL R8-3 SIGNS AT A MAXIMUM 500' SPACING THROUGHOUT THE WORK ZONE.

S8: WHEN SPEED LIMIT SIGNS CANNOT BE PLACED SIDE BY SIDE AS SHOWN, PLACE THEM 10' DISTANCE APART.

S9: STOP SIGNS NOT REQUIRED IF SIGNALS ARE ON 4-WAY FLASHING RED. STOP AHEAD SIGNS ARE NOT REQUIRED IF THERE IS ADEQUATE VISIBILITY OF THE STOP SIGN OR IF SIGNALS ARE BEING USED TO CONTROL TRAFFIC.

S10: PLACE REDUCED SPEED ZONE AHEAD SIGN (W3-5b) HERE WHEN USING A SPEED REDUCTION IN THIS DIRECTION.

TRAFFIC REGULATOR NOTES

TR1: TRAFFIC REGULATORS MUST FOLLOW ALL THE REQUIREMENTS IN THE STANDARD SPECIFICATIONS, THE STANDARD PLANS AND APPLICABLE SPECIAL PROVISIONS, THE CURRENT VERSIONS OF THE TRAFFIC REGULATOR'S INSTRUCTION MANUAL AND THE VIDEO "HOW TO SAFELY REGULATE TRAFFIC IN MICHIGAN". THE MAXIMUM DISTANCE BETWEEN THE TRAFFIC REGULATORS IS DETERMINED BY THE ROADWAY ADT, GEOMETRICS, AND AS DIRECTED BY THE ENGINEER.

TR2: PROVIDE APPROPRIATE BALLOON LIGHTING TO SUFFICIENTLY ILLUMINATE TRAFFIC REGULATOR'S STATIONS WHEN TRAFFIC REGULATING IS ALLOWED DURING THE HOURS OF DARKNESS.

TEMPORARY TRAFFIC CONTROL DEVICE NOTES

TC01: THE MAXIMUM DISTANCE IN FEET BETWEEN CHANNELIZING DEVICES IN A TAPER SHOULD NOT EXCEED 1.0 TIMES THE WORK ZONE SPEED LIMIT IN MPH FOR ROADWAYS WITH A POSTED WORK ZONE SPEED LIMIT LESS THAN 45 MPH AND SHOULD NOT EXCEED 50 FEET ON ROADWAYS WITH A POSTED WORK ZONE SPEED LIMIT OF 45 MPH OR GREATER. THE SPACING FOR 42 INCH CHANNELIZING DEVICE TAPERS ARE NOT TO EXCEED 25 FEET AT NIGHT.

TC02: THE MAXIMUM DISTANCE IN FEET BETWEEN CHANNELIZING DEVICES IN A TANGENT SHOULD NOT EXCEED TWICE THE WORK ZONE SPEED LIMIT IN MPH FOR ROADWAYS WITH A POSTED WORK ZONE SPEED LIMIT LESS THAN 45 MPH AND SHOULD NOT EXCEED 100 FEET ON ROADWAYS WITH A POSTED WORK ZONE SPEED LIMIT OF 45 MPH OR GREATER. THE SPACING FOR 42 INCH CHANNELIZING DEVICE TANGENTS ARE NOT TO EXCEED 50 FEET AT NIGHT.

TC03: TYPE III BARRICADES MUST BE LIGHTED FOR OVERNIGHT CLOSURES.

TC04: WHEN THE HAUL ROAD IS NOT IN USE, PLACE LIGHTED TYPE III BARRICADES WITH "ROAD CLOSED" EXTENDING COMPLETELY ACROSS THE HAUL ROAD.

TC05: USE VERTICAL PANELS IN LIEU OF THE TYPE B HIGH INTENSITY LIGHT SHOWN IN THE STANDARD PLAN FOR TEMPORARY CONCRETE BARRIER (R-53, AND R-126) WHEN USED WITH A TEMPORARY SIGNAL SYSTEM.

TC06: PLACE LIGHTED ARROW PANELS AS CLOSE TO THE BEGINNING OF TAPERS AS PRACTICAL, BUT NOT IN A MANNER THAT WILL OBSCURE OR CONFUSE APPROACHING MOTORISTS WHEN PHYSICAL LIMITATIONS RESTRICT PLACEMENT. IN CURBED SECTIONS, IF ARROW BOARD CANNOT BE PLACED BEHIND CURB, PLACE ARROW BOARD IN THE CLOSED LANE AS CLOSE TO THE BEGINNING OF TAPER AS POSSIBLE.

TC07: ADDITIONAL TYPE III BARRICADES MAY BE REQUIRED TO COMPLETELY CLOSE OFF ROAD FROM EDGE OF PAVEMENT TO EDGE OF PAVEMENT.

TC08: WHERE THE SHIFTED SECTION IS SHORTER THAN 600 FEET, A DOUBLE REVERSE CURVE SIGN (W24-1) CAN BE USED INSTEAD OF THE FIRST REVERSE CURVE SIGN, AND THE SECOND REVERSE CURVE SIGN CAN BE OMITTED.

TC09: RUMBLE STRIPS ARE TO BE PLACED AS SPECIFIED IN THE CONTRACT. IF NOT SPECIFIED IN THE CONTRACT, PLACE RUMBLE STRIPS AS SHOWN, AND IN ACCORDANCE WITH THE RUMBLE STRIP MANUFACTURER'S RECOMMENDATIONS. AN ARRAY OF RUMBLE STRIPS CONTAINS THREE RUMBLE STRIPS. PLACE THE RUMBLE STRIPS IN THE ARRAY AT A CONSISTENT DISTANCE, BETWEEN 10' AND 20' APART.

TC010: SEE THE WORK ZONE SAFETY AND MOBILITY MANUAL, PORTABLE CHANGEABLE MESSAGE SIGN GUIDELINES FOR RECOMENDED AND CORRECT PCMS MESSAGING. STAGGER PCMS THAT ARE ON OPPOSING SIDES OF THE ROAD 1000 FEET FROM EACH OTHER.

RAMP NOTES

RMP1: WHEN CONDITIONS ALLOW, E5-1 SIGNS MUST BE REMOVED OR COVERED AND CHANELIZING DEVICES MUST BE POSITIONED TO ENABLE RAMP TRAFFIC TO DIVERGE IN A FREE MANNER

RMP2: STOP AND YIELD CONDITIONS SHOULD BE AVOIDED WHENEVER PRACTICAL. WHEN CONDITIONS WARRANT, R1-1 SIGNS MAY BE USED IN PLACE OF R1-2 SIGNS. WHEN R-1 SIGNS ARE USED, R3-1 SIGNS MUST BE USED IN PLACE OF R3-2 SIGNS. CONSIDERATION SHOULD BE GIVEN TO CLOSING THE RAMP TO COMPLETE WORK TO ALLOW AN ADEQUATE MERGE DISTANCE. WORK SHOULD BE EXPEDITED TO AVOID THE STOP AND/OR YIELD CONDITIONS.

MDOT Michigan Department of Transportation — NOT TO SCALE — WORK ZONE TRAFFIC CONTROL TYPICAL — NO: 102-GEN-NOTES — TRAFFIC CONTROL TYPICALS NOTE SHEET — DATE: NOV 2020 — SHEET: 1 OF 2

FILE: 102-GEN-NOTES.dgn

THE FOLLOWING NOTES APPLY IF CALLED FOR ON THE TRAFFIC CONTROL TYPICAL

SIGNAL NOTES

SIG1: EXISTING SIGNAL MUST BE EITHER 4-WAY FLASHING RED, BAGGED, OR TURNED OFF.

SIG2: SIGNAL IS IN OPERATION.

SIG3: DELINEATE THE WORK ZONE AREA WITH 28 INCH CONES FOR DAYTIME WORK, OR 42 INCH CHANNELIZING DEVICES FOR NIGHTTIME WORK.

SIG4: THE CONTRACTOR MUST HAVE A DESIGNATED SPOTTER IF THE AERIAL BUCKET TRUCK IS LOCATED OVER ACTIVE TRAVEL LANES.

SIG5: THE LOWEST POINT OF THE BUCKET MAY NOT TRAVEL BELOW 14 FOOT VERTICAL CLEARANCE. THE CONTRACTOR MUST UTILIZE AN ALTERNATE SET UP, OR PLACE THE INTERSECTION IN A 4 WAY STOP IF THE 14 FOOT VERTICAL CLEARANCE IS COMPROMIZED. USE TRAFFIC REGULATORS TO CONTROL TRAFFIC THROUGH THE INTERSECTION WHEN TRAFFIC IS PLACED IN A 4 WAY STOP.

SIG6: DELINEATE THE TRUCK WITH CHANNELIZING DEVICES. THE POSITION OF THE TRUCK MAY BE MOVED TO FACILITATE WORK.

MAINTENANCE AND SURVEYING NOTES

MS1: WHENEVER STOPPING SIGHT DISTANCE EXISTS TO THE REAR, THE SHADOW VEHICLES SHOULD MAINTAIN THE RECOMENDED DISTANCE FROM THE WORK AREA AND PROCEED AT THE SAME SPEED. THE SHADOW VEHICLE SHOULD SLOW DOWN AND TRAVEL AT A FARTHER DISTANCE TO PROVIDE ADEQUATE SIGHT DISTANCE IN ADVANCE OF VERTICAL OR HORIZONTAL CURVES.

MS2: WORKERS OUTSIDE OF VEHICLES MUST ONLY WORK WITHIN 150' OF WORK VEHICLES WITH AN ACTIVATED BEACON, BETWEEN THE "BEGIN WORK CONVOY" SIGN AND THE "END WORK CONVOY" SIGN, OR BETWEEN THE "WORK ZONE BEGINS" AND "END ROAD WORK" SIGN.

MS3: WORK OR SHADOW VEHICLES WITH OR WITHOUT A TMA MAY BE USED TO SEPARATE THE WORK SPACE FROM TRAFFIC. IF USED, THE VEHICLES SHOULD BE PARKED ACCORDING TO THE ROLL AHEAD DISTANCE TABLES.

MS4: WORK AND SHADOW VEHICLES SHALL BE APPROPRIATELY EQUIPPED WITH AN ACTIVATED AMBER BEACON.

MS5: WHEN WORKERS ARE OUTSIDE THEIR VEHICLES IN AN EXISTING LANE WHILE A MOBILE OPERATION IS OCCURRING DURING THE NIGHTTIME HOURS, CHANNELIZING DEVICES TO DELINEATE OPEN OR CLOSED LANES AT 50 FT SPACING MUST BE USED. AN EXAMPLE OF AN OPERATION (BUT NOT LIMITED TO) IS THE LAYOUT OF CONCRETE PATCHES.

MS6: W21-6 AND W20-1 SIGNS MAY BE SUBSTITUTED AS DETERMINED BY THE TYPE OF WORK TAKING PLACE AS PER THE ENGINEER.

MDOT Michigan Department of Transportation — NOT TO SCALE — WORK ZONE TRAFFIC CONTROL TYPICAL — NO: 102-GEN-NOTES — TRAFFIC CONTROL TYPICALS NOTE SHEET — DATE: NOV 2020 — SHEET: 2 OF 2

FILE: 102-GEN-NOTES.dgn

progressive ae
1811-4 Mile Rd NE | Grand Rapids, MI 49525 | 616.361.2664 | www.progressiveae.com

SCOOTER'S COFFEE
1490 WEST ANN ARBOR RD., PLYMOUTH, MI 48170

If this document is sealed and signed in a digital or electronic format and is received from someone other than the sealing professional identified in the document, you must contact the sealing professional in writing to validate authenticity of the document. The sealing professional disclaims the seal and signature and shall not be liable for any liability associated with it where the authenticity of any digital or electronic seal or signature has not been validated in this manner.

ISSUANCE
COUNTY REVIEW
12/22/2021

REVISIONS

NO.	DATE	DESCRIPTION

FILE NUMBER	91880004
PROJECT MANAGER	
PROFESSIONAL	JPM
DRAWN BY	JTS
CHECKED BY	

TRAFFIC CONTROL DETAILS
C6.02

12/22/2021 4:13:29 PM
P:\91880004\20 WP\10-C6.02 TRAFFIC CONTROL PLAN.dwg aquinoa
THIS DOCUMENT HAS BEEN PREPARED BY PROGRESSIVE AE AS AN INSTRUMENT OF SERVICE, AND PROGRESSIVE AE SHALL RETAIN ALL COMMON LAW, STATUTORY AND OTHER RESERVED RIGHTS, INCLUDING THE COPYRIGHT THERETO.

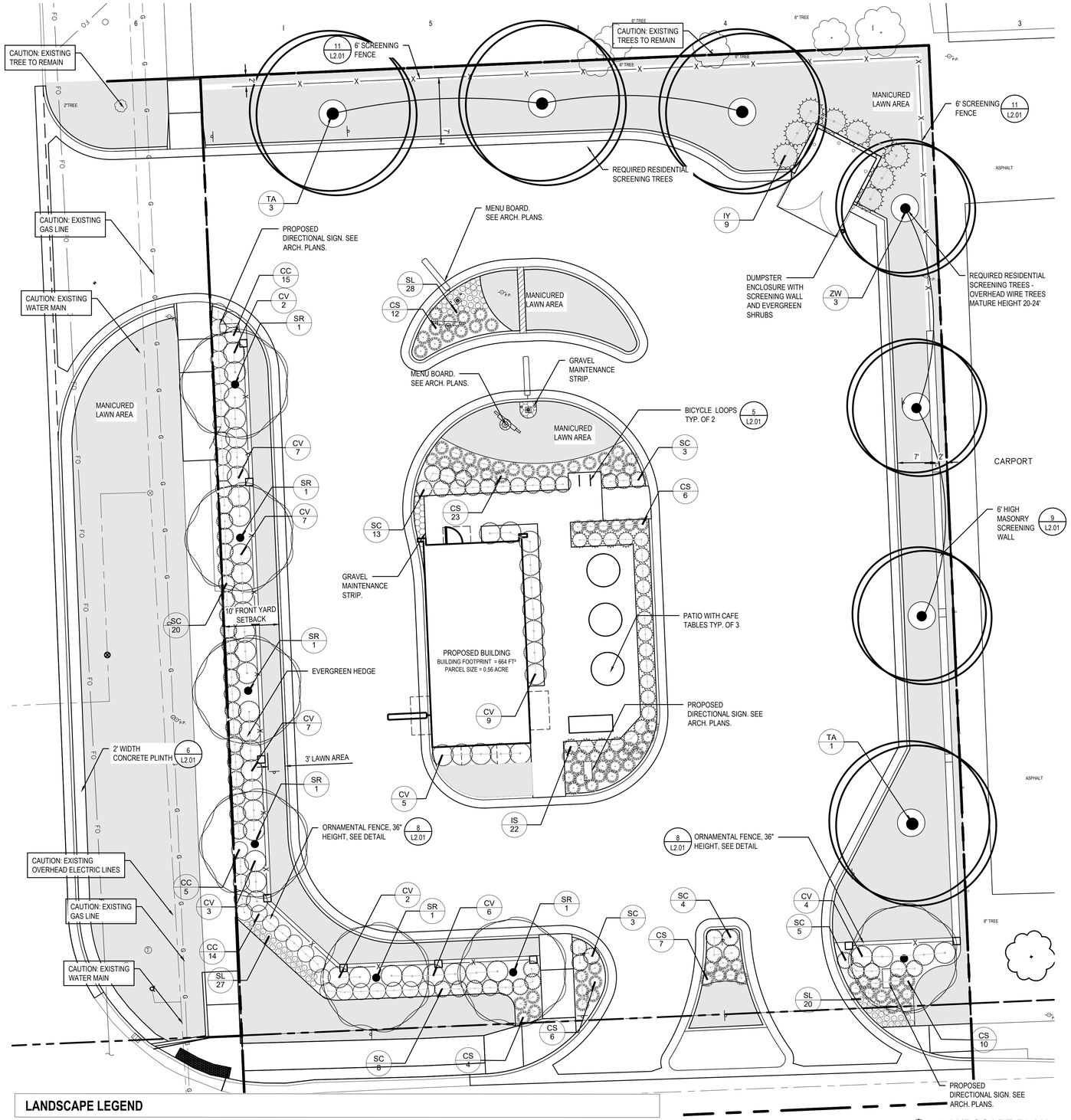

LANDSCAPE PLAN

LANDSCAPE LEGEND

TREES	QTY	BOTANICAL / COMMON NAME	CONT	CAL	REMARKS
SR	7	Syringa reticulata / Japanese Tree Lilac	B & B	3"	5' Branch Ht. Min. Single Stem, Matched.
TA	4	Tilia americana / American Linden	B & B	3-1/2"	6' Branch ht. Min.
ZW	3	Zelkova serrata 'Wireless' / Wireless Zelkova	B & B	4"	5-6' Branch ht. Min.

SHRUBS	QTY	BOTANICAL / COMMON NAME	CONT	FT	REMARKS
CC	34	Clethra alnifolia 'Crystalina' TM / Sugartina Summersweet	#3 CONT		
CV	52	Cotoneaster acutifolius lucidus / Hedge Cotoneaster	#5 CONT		36" Matched. Manicured hedge maintained at 3.5-4' ht.
IS	22	Ilex glabra 'Shamrock' / Shamrock Inkberry Holly	#5 CONT		30" Matched.
IY	9	Ilex x 'Rutzan' TM / Red Beauty Holly	B&B		3-4'
SC	56	Syringa x 'SMNJRPU' TM / Bloomerang Dwarf Purple Lilac	#5 CONT		30"

PEREN.	QTY	BOTANICAL / COMMON NAME	CONT	FT	REMARKS
CS	89	Calamagrostis arundinacea brachytricha /Feather Reed Grass	#1 CONT		
SL	76	Salvia nemorosa 'Rose Marvel' / Rose Marvel Meadow Sage	#1 CONT		

ZONING CALCULATIONS

ROAD FRONTAGE ANNE ARBOR RD 133' LF	PROVIDED:	3 TREES, 46 SHRUBS
	REQUIRED:	3 TREE, 44 SHRUBS
	CALCULATION:	133' LF / 40LF * 1 TREE = 3.3 TREES 133' LF / 30LF * 10 SHRUBS = 44.3 SHRUBS
ROAD FRONTAGE SHELDON RD 193 LF*	PROVIDED:	4 PROPOSED + 1 EX. TREE, 66 SHRUBS
	REQUIRED:	4 TREES, 64 SHRUBS
	CALCULATION:	193' LF / 40LF * 1 TREE = 4.8 TREE 193' LF / 30LF * 10 SHRUBS = 64 SHRUBS

*ROAD FRONTAGE LENGTH DOES NOT INCLUDE DRIVEWAY OPENINGS FOR CALCULATIONS.

RESIDENTIAL SCREENING EAST 175 LF*	PROVIDED:	5 TREES
	REQUIRED:	5 TREES
	CALCULATION:	175' LF / 35 LF * 1 TREE = 5 TREES
RESIDENTIAL SCREENING NORTH 133 LF*	PROVIDED:	3 PROPOSED + 1 EXISTING TREE
	REQUIRED:	4 TREES
	CALCULATION:	133' LF / 35 LF * 1 TREE = 3.8 TREES

ZONING NOTES

ZONING CLASSIFICATION: ARC
ADJACENT ZONING: EAST/ NORTH RM-1 (MULTI FAMILY RESIDENTIAL)

PLANTING SEASON FOR DECIDUOUS PLANTS IS FROM MARCH 1-JUNE1, OCT. 1- FREEZE

PLANTING SEASON FOR EVERGREEN PLANTS IS FROM MARCH 1 JUNE 1

DECIDUOUS TREES: 3.5" CAL. MIN AT PLANTING
ORNAMENTAL TREE: 2" CAL. OR 6' HT MIN. AT PLANTING
EVERGREEN TREES: 8' HT MIN. AT PLANTING
SHRUBS: 30" HT. MIN. AT PLANTING

VARIATION OF PLANT SIZES REQUIRED PER ORDINANCE STANDARDS.

ROAD FRONTAGE: 1 TREE PER 40'LF
5 SHRUBS PER 30' LF
36" ORNAMENTAL FENCE

RESIDENTIAL SCREENING: 6-8' LANDSCAPE BUFFER
6' SCREEN FENCE
1 TREE PER 35' LF

INTERNAL PARKING LOT LANDSCAPING REQUIREMENTS NOT REQUIRED FOR PARKING LOTS WITH LESS THAN 25 SPACES.

LINE OF SIGHT - NO TREES AND VISUAL DETERRENTS WITHIN 35' LF OF STREET CORNERS, 10' MIN. DISTANCE FROM DRIVEWAYS.

IRRIGATION NOTES

1. IRRIGATION TO ALL LANDSCAPED AREAS INCLUDING MANICURED LAWN, PLANTING BEDS, AND RIGHT OF WAY LANDSCAPING TO BE PROVIDED. NO OVER SPRAY ALLOWED ON PAVED SURFACES. ALL LANDSCAPE BEDS AND ISLANDS LESS THAN 12' IN WIDTH TO BE DRIP IRRIGATED. IRRIGATION PLAN TO BE PROVIDED. CONTRACTOR SHALL COORDINATE PLANTING SCHEDULE WITH IRRIGATION CONSULTANT.

1. WATER APPLICATION RATES SHALL NOT EXCEED INFILTRATION RATE OF SOIL. RAIN SWITCHES OR MOISTURE SENSORS TO BE INSTALLED

2. IRRIGATION CONTROLLERS MUST BE CAPABLE OF DUAL OR MULTIPLE PROGRAMMING. CONTROLLERS MUST HAVE MULTIPLE CYCLE START CAPACITY AND FLEXIBLE CALENDAR PROGRAMS. PROVIDE A POST-ESTABLISHMENT WATER SCHEDULE FOR THE YEAR. SCHEDULE IS TO BE DIVIDED INTO FOUR (4) SEASONAL QUARTERS.

CALL 811 NOTE:

CONTRACTOR TO CONTACT 811 SERVICE AT LEAST 3 WORKING DAYS PRIOR TO CONSTRUCTION, TO CONFIRM LOCATION OF EXISTING UTILITIES. DIAL 811.

Know what's below. Call before you dig.
www.CALL811.com

LANDSCAPE LEGEND

LARGE CANOPY TREES
ORNAMENTAL TREES
DECIDUOUS AND EVERGREEN SHRUBS
ORNAMENTAL GRASSES
MANICURED LAWN AREA
1-2" DIA ROCK MULCH NATIVE WASHED STONE COLOR: GRAY

SEED — LAWN SEED MIX - FAST GROWING SEED MIX BY DEBRUYN SEED
(50% PERENNIAL RYEGRASS 20% KENTUCKY BLUEGRASS 15% TURF-TYPE TALL FESCUE 15% ANNUAL RYEGRASS)

GENERAL LANDSCAPE NOTES

1. CONTRACTOR RESPONSIBLE FOR UNDERSTANDING PROJECT CONDITIONS AND VERIFYING PLANT QUANTITIES. NOTIFY LANDSCAPE ARCHITECT OF ANY PLAN DISCREPANCIES.
2. PLANT LOCATIONS TO BE STAKED IN THE FIELD FOR REVIEW AND APPROVAL BY LANDSCAPE ARCHITECT AND OWNER.CONTRACTOR WILL BE RESPONSIBLE FOR VERIFYING ALL EXISTING UNDERGROUND UTILITIES. CONTACT THE APPROPRIATE UTILITY COMPANY FOR FIELD STAKING ALL LINES.
3. ALL AREAS DISTURBED BY CONSTRUCTION TO BE TOPSOILED AND SEEDED UNLESS SHOWN OTHERWISE ON PLANS. TOPSOIL TO BE 4" DEPTH FOR ALL LAWN, GROUNDCOVER, AND PLANTING BED AREAS.
4. CONTRACTOR TO CONTACT MISS DIG AT PHONE NUMBER 811 AT LEAST 3 WORKING DAYS PRIOR TO CONSTRUCTION, TO CONFIRM LOCATION OF EXISTING UTILITIES.
5. CONTRACTOR TO COORDINATE PLANTING SCHEDULE WITH IRRIGATION CONTRACTOR.
6. NOTIFY LANDSCAPE ARCHITECT IF AREAS OF POOR DRAINAGE OR OTHER UNUSUAL SUB-GRADE CONDITIONS ARE ENCOUNTERED DURING EXCAVATION FOR PLANTING PITS.
7. SHRUB PLANTING BEDS AND TREE SAUCERS TO RECEIVE 4" SHREDDED HARDWOOD MULCH, PERENNIAL BEDS TO RECEIVE 3" DEPTH MULCH AND GROUND COVER AREAS TO RECEIVE 1" DEPTH MULCH. MULCH SHALL BE PULLED AWAY 1" FROM SHRUB AND TREE TRUNKS. SEE DETAIL THIS SHEET.
8. ALL SHRUB BEDS TO HAVE ALUMINUM EDGING AND WEED BARRIER FABRIC (SEE SPECIFICATIONS).
9. PLANTING MIXTURE FOR PERENNIALS SHALL BE SIX INCH DEPTH OF FOUR PARTS BY VOLUME OF TOPSOIL TO ONE PART OF SPHAGNUM PEAT MOSS.
10. CONTRACTOR SHALL PROVIDE SPECIFIED SHRUBS, GROUND COVERS AND OTHER PLANT MATERIALS THAT COMPLY WITH ALL RECOMMENDATIONS AND REQUIREMENTS OF ANSI Z60.1 "AMERICAN STANDARD FOR NURSERY STOCK". PLANT MATERIAL SHALL BE HEALTHY, VIGOROUS STOCK, GROWN WITH GOOD HORTICULTURAL PRACTICE AND INSTALLED IN ACCORDANCE WITH METHODS ESTABLISHED BY THE AMERICAN ASSOCIATION OF NURSERYMEN.
11. NOTIFY LANDSCAPE ARCHITECT AND OWNER (3 DAYS MIN. NOTICE) TO INSPECT AND TAG PLANT MATERIAL IN THE NURSERY PRIOR TO JOBSITE DELIVERY AND INSTALLATION.

TREE PROTECTION GENERAL NOTES

1. CONTRACTOR IS RESPONSIBLE FOR UNDERSTANDING PROJECT CONDITIONS AND VERIFYING PLANT QUANTITIES. NOTIFY LANDSCAPE ARCHITECT OF PLAN DISCREPANCIES.
2. PROTECT EXISTING TREES UNLESS OTHERWISE NOTED. NO PARKING OR STORAGE OF MATERIALS WITHIN TREE ROOT ZONE. PLACE TREE PROTECTION FENCE WHERE SHOWN ON PLAN.
3. TREE PROTECTION FENCE PER DETAIL , SEE SHEET L2.01. INSTALL PRIOR TO ANY CONSTRUCTION ACTIVITY AND MAINTAIN DURING ENTIRE CONSTRUCTION PERIOD.
4. NO BURNING OR BURYING OF CLEARED OR DEMOLITION MATERIAL SHALL BE ALLOWED ON SITE.
5. CONTRACTOR MUST RESTORE AND REPAIR ANY EXISTING CONDITIONS DISTURBED BY CONSTRUCTION.

LANDSCAPE MAINTENANCE SCHEDULE

TASK	MONTH											
	JAN	FEB	MAR	APR	MAY	JUNE	JULY	AUG	SEPT	OCT	NOV	DEC
CARE OF PLANTS												
MONITORING			■	■	■	■	■	■	■	■	■	■
PRUNING (AS NEEDED)		■	■	■								
DEADHEAD PLANTS						■	■	■	■			
FERTILIZATION				■							■	
CUT BACK			■	■								
WATERING AS NEEDED					■	■	■	■	■	■	■	
MONITORING												
PLANTING BEDS												
EDGING				■				■				
WEEDING AS NEEDED				■	■	■	■	■	■	■		
MULCHING				■								
SOIL TESTING				■								
LEAF REMOVAL			■							■		
PEST MANAGEMENT												
MONITORING			■	■	■	■	■	■	■	■		
LAWNS												
FERTILIZE/LIME										■	■	
SEEDING				■						■		
WINTER CLEAN UP	■	■	■									

THE SCHEDULE SHOWN ABOVE IS FOR GUIDANCE ONLY. SCHEDULING OF MAINTENANCE ACTIVITY SHOULD BE COORDINATED WITH SEASONAL WEATHER CONDITIONS.

progressive ae
1811-4 Mile Rd NE Grand Rapids, MI 49525 616.361.2664 www.progressiveae.com

SCOOTER'S COFFEE
1490 WEST ANN ARBOR RD., PLYMOUTH, MI 48170

If this document is sealed and signed in a digital or electronic format and is received from someone other than the sealing professional identified in the document, you must contact the sealing professional in writing to validate authenticity of the document. The sealing professional disclaims the seal and signature and shall not be liable for any liability associated with it where the authenticity of any digital or electronic seal or signature has not been validated in this manner.

ISSUANCE
COUNTY REVIEW
12/22/2021

REVISIONS

NO.	DATE	DESCRIPTION

FILE NUMBER	91880004
PROJECT MANAGER	
PROFESSIONAL	JPM
DRAWN BY	SRV
CHECKED BY	

LANDSCAPE PLAN
L1.01

12/22/2021 4:12:02 PM
P:\91880004\03 WIP\12-L1.01 - LANDSCAPE PLAN.dwg sandyales

THIS DOCUMENT HAS BEEN PREPARED BY PROGRESSIVE AE AS AN INSTRUMENT OF SERVICE, AND PROGRESSIVE AE SHALL RETAIN ALL COMMON LAW, STATUTORY AND OTHER RESERVED RIGHTS, INCLUDING THE COPYRIGHT THERETO.

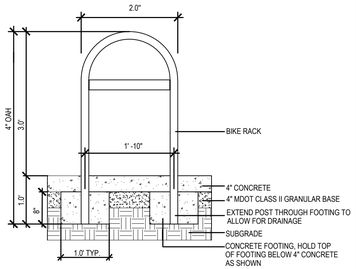

NOTE: CONTRACTOR TO INSTALL PER MANUFACTURER'S INSTRUCTIONS, VERIFY ALL DIMENSIONS PRIOR TO INSTALLATION

SEE SITE PLAN DRAWINGS FOR BIKE PARKING LAYOUTS

5 BIKE LOOP DETAIL
NOT TO SCALE

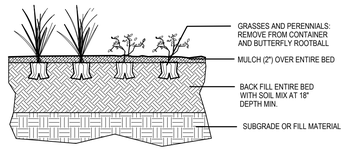

4 PERENNIAL PLANTING DETAIL
NOT TO SCALE

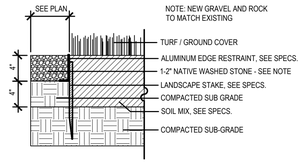

3 MAINTENANCE STRIP AND ROCK MULCH DETAIL
NOT TO SCALE

ALL PLANTS TO BE NURSERY GROWN STOCK IN SOIL SIMILAR TO SITE CONDITIONS

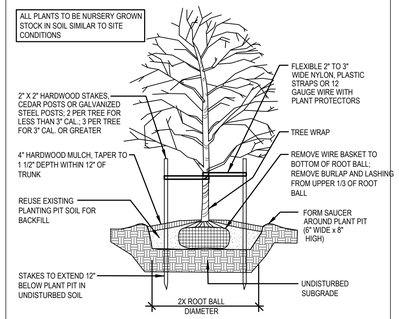

2 DECIDUOUS TREE PLANTING DETAIL
NOT TO SCALE

ALL PLANTS TO BE NURSERY GROWN STOCK IN SOIL SIMILAR TO SITE CONDITIONS

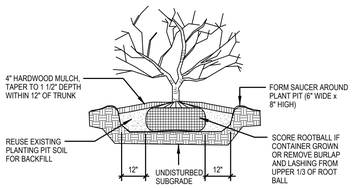

1 SHRUB PLANTING DETAIL
NOT TO SCALE

SOURCE NOTES:
FULL BRICK VANEER WITH TOOLED MORTAR JOINTS USE "WYANDOT MODULAR" AS MANUFACTURED BY GLEN-GERY BRICK, BELDEN BRICK-DISTRIBUTOR. PHONE: (586) 294-5400

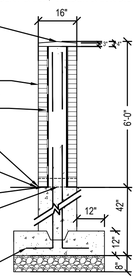

9 BRICK SCREEN WALL WITH FLAT FACE RISE WALL CAP
NOT TO SCALE

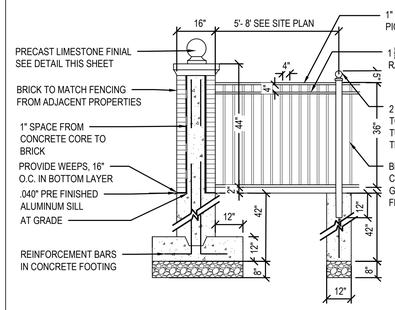

SOURCE NOTES:
1. UAF - 200 FLAT TOP THREE RAIL FENCE, BLACK POWDER COATED INDUSTRIAL ALUMINUM.

   SOURCE: ULTRA ALUMINUM MANUFACTURING, INC. 10505 BLDG# C PLAZA DRIVE WHITMORE LAKE, MI 48189. PHONE (800) 656-4420

2. FULL BRICK VANEER WITH TOOLED MORTAR JOINTS USE "WYANDOT MODULAR" AS MANUFACTURED BY GLEN-GERY BRICK, BELDEN BRICK-DISTRIBUTOR. PHONE: (586) 294-5400

3. TAN PRECAST LIMESTONE CAP AND FINIAL (CONNELLLYFLAT1) AS MANUFACTURED BY STONE LEGENDS. . PHONE (800) 398-119. USE MORTAR SETTING BED. DOWEL IF NECESSARY. COLOR TO BE TAN.

NOTES:
1. SEE SITE PLAN C2.01 FOR PLACEMENT OF STONE PIERS AND WROUGHT IRON FENCE.

2. THE STREETSCAPE ELEMENTS SHALL BE CONSISTENT WITH THE STANDARDS AND REQUIREMENTS OF THE ANN ARBOR ROAD STREETSCAPE PROTOTYPE, "ANN ARBOR ROAD STANDARD DESIGN DETAILS," DATED OCTOBER 16, 2003, ILLUSTRATED IN SECTION 78-171 OF THE CITY OF PLYMOUTH ZONING ORDINANCE.

8 16"x16" BRICK PIER AND BLACK FAUX WROUGHT IRON ORNAMENTAL FENCE
NOT TO SCALE

CONTRACTOR IS RESPONSIBLE FOR MATCHING INTEGRAL COLOR SO THAT INSTALLED, CURED, AND SEALED PRODUCT IS SIMILAR OR EQUAL IN COLOR TO WYANDOTTE MODULAR HEARTLAND SERIES COLOR BRICK USED IN PIERS. INTEGRAL COLOR SHALL BE APPLIED IN ONE 6" DEEP COURSE THAT INCLUDES RESIDENTIAL RATE FIBERGLASS MOLD (MIXED BY THE POUND TO CREATE 4000 PSI STRENGTH).

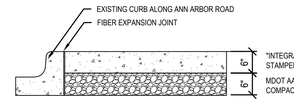

USE ALTERNAR DECORATIVE CONCRETE
INTEGRAL PIGMENT: TERRA COTTA (15LBS PER YARD)
RELEASE AGENT : LIGHT GRAY
EUCLID DIAMOND CLEAR SEALANT
SEALANT: SATIN (2 COATS)

7 STAMPED CONCRETE VERGE SECTION
NOT TO SCALE

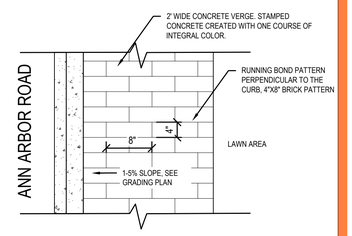

6 STAMPED CONCRETE VERGE PLAN DETAIL
NOT TO SCALE

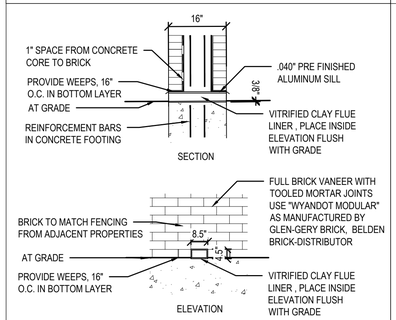

12 DRAIN SCUPPER AT WALL DETAIL
NOT TO SCALE

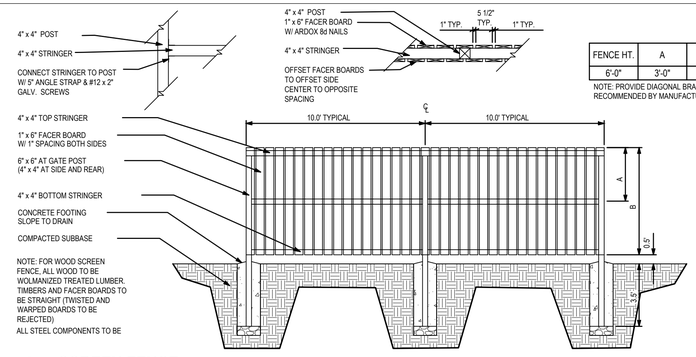

FENCE HT.	A	B
6'-0"	3'-0"	6'-0"

NOTE: PROVIDE DIAGONAL BRACING AS RECOMMENDED BY MANUFACTURER.

11 SCREEN FENCE
NOT TO SCALE

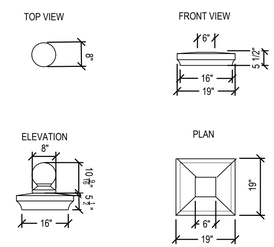

SOURCE NOTES:
1. STONE LEGENDS : 301 PLEASANT DRIVE, DALLAS TX, 75217
   TEL. (800) 398-1199 FAX: (241) 398-1293
   www.stonelegends.com

2. CONNELLY FLAT LIMESTONE CAP
   NAME:CONNELLY FLAT1 COLOR:TAN

3. BALL WITH PEDESTAL LIMESTONE FINIAL
   NAME: BALL WIPEDESTAL 2 COLOR: TAN

NOTES:
1. SEE SITE PLAN C2.01 FOR PLACEMENT OF STONE PIERS AND WROUGHT IRON FENCE.

2. THE STREETSCAPE ELEMENTS SHALL BE CONSISTENT WITH THE STANDARDS AND REQUIREMENTS OF THE ANN ARBOR ROAD STREETSCAPE PROTOTYPE, "ANN ARBOR ROAD STANDARD DESIGN DETAILS," DATED OCTOBER 16, 2003, ILLUSTRATED IN SECTION 78-171 OF THE CITY OF PLYMOUTH ZONING ORDINANCE.

10 CAST LIMESTONE PIER CAP AND FINIAL WITH PEDESTAL
NOT TO SCALE

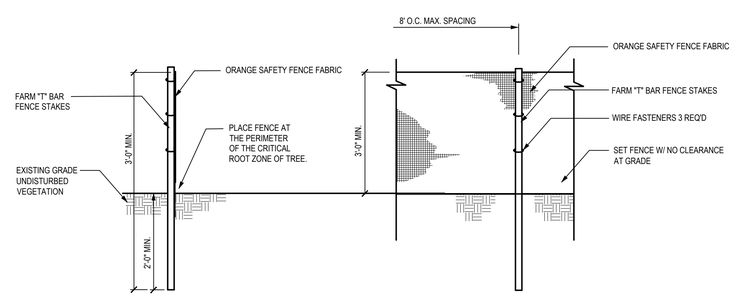

NOTES:
1. FOR GROUPS OF TREES: PLACE THE BARRICADES AT THE DRIP LINE AROUND THE GROUPS PERIMETER
2. INSTALLATION OF TREE PROTECTION BARRICADES SHALL BE PERFORMED BEFORE ANY SITE DEVELOPMENT ACTIVITY TAKES PLACE.
3. THE TREE PROTECTION BARRICADES SHALL REMAIN IN PLACE THROUGHOUT THE CONSTRUCTION PHASE AND UNTIL ALL SITE DEVELOPMENT ACTIVITIES ARE FULLY COMPLETE.
4. ANY DAMAGE THAT MAY OCCUR TO THE BARRICADES SHALL BE REPAIRED OR REPLACED TO THE ORIGINAL SPECIFICATIONS, WITHIN 24 HOURS OF THE DAMAGE OCCURRING.
5. THE AREA WITHIN THE TREE PROTECTION BARRICADES SHALL NOT BE USED FOR THE STORAGE OF ANY MATERIALS, SUPPLIES OR DEBRIS OR THE DISPOSAL OF ANY SOLID, LIQUID, OR GASEOUS MATERIALS THAT COULD CAUSE HARM TO TO THE TREES.
6. ANY TREE SCHEDULED TO REMAIN IF DAMAGED DURING CONSTRUCTION SHALL BE REPLACED WITH MATERIAL AS APPROVED BY THE OWNER'S REPRESENTATIVE.
7. MONETARY TREE VALUE SHALL BE DETERMINED BY USING THE GUIDE FOR PLANT APPRAISAL PUBLISHED BY THE INTERNATIONAL SOCIETY OF ARBORICULTURE OR OTHER SOURCES AS DETERMINED BY THE CITY FORESTER.
8. BARRICADES SHALL PROTECT ALL TREES SCHEDULED TO REMAIN, BEFORE AND DURING ALL CONSTRUCTION ACTIVITIES.

13 TREE PROTECTION FENCE DETAIL
NOT TO SCALE

progressive|ae
1811 4 Mile Rd NE Grand Rapids, MI 49525 616.361.2664 www.progressiveae.com

SCOOTER'S COFFEE
1490 WEST ANN ARBOR RD., PLYMOUTH, MI 48170

If this document is sealed and signed in a digital or electronic format and is received from someone other than the sealing professional identified in the document, you must contact the sealing professional in writing to validate authenticity of the document. The sealing professional disclaims the seal and signature and shall not be liable for any liability associated with it where the authenticity of any digital or electronic seal or signature has not been validated in this manner.

ISSUANCE
COUNTY REVIEW
12/22/2021

REVISIONS
NO. DATE DESCRIPTION

FILE NUMBER 91880004
PROJECT MANAGER
PROFESSIONAL JPM
DRAWN BY SRV
CHECKED BY

LANDSCAPE DETAILS
L2.01

12/22/2021 4:13:41 PM
P:\91880004\20 WP\12 L2.01 - LANDSCAPE DETAILS.dwg ssullivan
THIS DOCUMENT HAS BEEN PREPARED BY PROGRESSIVE AE AS AN INSTRUMENT OF SERVICE, AND PROGRESSIVE AE SHALL RETAIN ALL COMMON LAW, STATUTORY AND OTHER RESERVED RIGHTS, INCLUDING THE COPYRIGHT THERETO.

STRUCTURAL NOTES

GENERAL

1. THIS PROJECT SHALL MEET ALL REQUIREMENTS OF THE CITY OF PLYMOUTH, MICHIGAN AND THE 2015 MICHIGAN BUILDING CODE (2015 INTERNATIONAL BUILDING CODE W/AMENDMENTS).
2. THE GENERAL CONTRACTOR SHALL VERIFY THE SIZE AND LOCATION OF ALL ARCHITECTURAL, MECHANICAL, PLUMBING, AND ELECTRICAL OPENINGS (COORDINATE WITH APPLICABLE TRADES). THE CONTRACTOR SHALL PROVIDE FOR ALL OPENINGS, WHETHER SHOWN ON THE STRUCTURAL DRAWINGS OR NOT. ANY DEVIATION FROM OPENINGS SHOWN ON THE STRUCTURAL DRAWINGS SHALL BE BROUGHT TO THE ENGINEER'S ATTENTION FOR APPROVAL PRIOR TO CONSTRUCTION.
3. THE GENERAL CONTRACTOR SHALL VERIFY ALL DIMENSIONS SHOWN ON THE STRUCTURAL DRAWINGS WITH THE ARCHITECTURAL DRAWINGS BEFORE CONSTRUCTION AND NOTIFY THE ARCHITECT OF ANY DISCREPANCIES OR INCONSISTENCIES BEFORE PROCEEDING WITH THE WORK.
4. COMPLETE SHOP DRAWINGS AS REQUIRED FOR THE STRUCTURAL WORK SHALL BE SUBMITTED TO THE ENGINEER FOR REVIEW PRIOR TO COMMENCEMENT OF CONSTRUCTION IN ACCORDANCE WITH THE SPECIFICATIONS. SUCH REVIEW BY THE ENGINEER DOES NOT RELIEVE THE CONTRACTOR OF FULL RESPONSIBILITY FOR CORRECT FABRICATION AND CONSTRUCTION OF THE WORK. ALLOW TEN (10) BUSINESS DAYS FOR REVIEW FROM THE TIME SUBMITTALS ARE RECEIVED IN OUR OFFICE.
5. ANY DEVIATION FROM, ADDITION TO, SUBSTITUTION FOR, OR MODIFICATION TO THE STRUCTURE OR ANY PART OF THE STRUCTURE DETAILED ON THESE DRAWINGS SHALL BE SUBMITTED IN WRITING TO THE ENGINEER FOR REVIEW. SHOP DRAWINGS THAT ARE SUBMITTED FOR REVIEW DO NOT CONSTITUTE "IN-WRITING" UNLESS IT IS CLEARLY NOTED THAT SPECIFIC CHANGES ARE BEING SUGGESTED.
6. THE STRUCTURAL DRAWINGS ARE NOT TO BE SCALED FOR DETERMINATION OF QUANTITIES, LENGTHS, OR FIT OF MATERIALS.
7. THE STRUCTURAL DRAWINGS AND SPECIFICATIONS REPRESENT THE FINISHED STRUCTURE. THEY DO NOT INDICATE THE METHODS OF CONSTRUCTION UNLESS SO STATED OR NOTED. THE CONTRACTOR SHALL PROVIDE ALL MEASURES NECESSARY TO PROTECT THE WORKMEN AND OTHER PERSONS DURING CONSTRUCTION.

SPECIAL INSPECTION

THE FOLLOWING ITEMS REQUIRE SPECIAL INSPECTION:
(REFERENCE ADJACENT TABLES FOR ADDITIONAL INFORMATION.)

1. CAST-IN-PLACE CONCRETE
2. SOILS AND FOUNDATIONS

DESIGN LOADS

1. ROOF LIVE LOAD 20 PSF
2. ROOF DEAD LOAD 20 PSF
3. WIND LOAD BASED ON ASCE 7-10
   V_{ULT} = 115 MPH
   V_{ASD} = 89 MPH
   RISK CATEGORY = II
   EXPOSURE CATEGORY B
   INTERNAL PRESSURE COEFFICIENT GC_{pi}: ±0.18
   COMPONENTS AND CLADDING:
   (ROOF ANGLE 0 TO 7°)
   ULTIMATE
   +16.0 PSF (ZONE 1, EFF. AREA = 100 FT.^{2})
   −21.8 PSF
   +16.0 PSF (ZONE 2, EFF. AREA = 100 FT.^{2})
   −25.8 PSF
   +16.0 PSF (ZONE 3, EFF. AREA = 100 FT.^{2})
   −25.8 PSF
   +22.7 PSF (ZONE 4, EFF. AREA = 20 FT.^{2})
   −24.7 PSF
   +22.7 PSF (ZONE 5, EFF. AREA = 20 FT.^{2})
   −29.7 PSF
   43.9 PSF (PARAPETS, LOAD CASE A)
   47.9 PSF (PARAPETS, LOAD CASE B)
4. SEISMIC LOADS
   I_e = 1.0
   S_S = 0.101g
   S_1 = 0.046g
   SITE CLASS D
   S_{DS} = 0.107g
   S_{D1} = 0.074g
   DESIGN CATEGORY: B
   BASIC SEISMIC-FORCE-RESISTING SYSTEM: LIGHT FRAME WALLS WITH SHEAR PANELS-WOOD STRUCTURAL PANELS.
   DESIGN BASE SHEAR V = 875 LBS
   R = 6.5
   ANALYSIS PROCEDURE: SIMPLIFIED ANALYSIS
5. SNOW LOADS
   GROUND SNOW Pg = 20 PSF
   FLAT ROOF SNOW Pf = 20 PSF
   C_e = 1.0
   I_S = 1.0
   C_t = 1.0
   REFER TO S0.1 FOR SNOW DRIFT LOADING REQUIREMENTS.
6. SEE ROOF PLAN FOR ADDITIONAL MECHANICAL LOADS.

FOUNDATION DESIGN AND SITEWORK FOR BUILDING

1. FOUNDATION DESIGN IS BASED ON RECOMMENDATIONS CONTAINED IN A GEOTECHNICAL INVESTIGATION REPORT BY: PARTNER; DATED: SEPTEMBER 23, 2021 REPORT NO.: 21-321552.3.
2. FOUNDATION DESIGN IS BASED ON AN ALLOWABLE BEARING PRESSURE OF 2,000 PSF FOUNDED INTO SUITABLE BEARING NATURAL SOILS OR NEWLY PLACED STRUCTURAL COMPACTED FILL. CONTINUOUS STRIP FOOTING WIDTHS SHALL BE 16 INCHES (MINIMUM). MINIMUM EMBEDMENT DEPTH BELOW EXTERIOR GRADE IS 42 INCHES. FOUNDATIONS SHALL BEAR ON A MINIMUM OF 24 INCHES OF OVEREXCAVATED AND RE-COMPACTED NATIVE SOILS OR IMPORTED STRUCTURAL FILL.
3. THE CONTRACTOR SHALL READ THE SOILS REPORT REFERENCED ABOVE AND THOROUGHLY FAMILIARIZE HIMSELF WITH ALL SITE AND SUBGRADE PREPARATION RECOMMENDATIONS CONTAINED THEREIN. INFORMATION CONTAINED IN THE "FOUNDATION DESIGN AND SITEWORK FOR BUILDING" SECTION OF THE STRUCTURAL NOTES REPRESENTS A GENERAL OVERVIEW OF SITE WORK TO BE PERFORMED, AND SHALL NOT BE USED AS A SUBSTITUTE FOR THE SOILS REPORT REFERENCED ABOVE.
4. REMOVE ALL VEGETATION AND DEBRIS, INCLUDING PAVEMENTS, SIDEWALKS, BUILDING FOUNDATIONS, AND ABANDONED UTILITIES.
5. SUBGRADES WITHIN THE PROPOSED BUILDING AREA SHOULD BE PROOFROLLED, IN THE PRESENCE OF THE GEOTECHNICAL ENGINEER, WITH APPROPRIATE RUBBER-TIRE MOUNTED HEAVY CONSTRUCTION EQUIPMENT OR A LOADED DUMP TRUCK TO DETECT LOOSE YIELDING SOILS WHICH MUST BE REMOVED TO A STABLE SUBGRADE.
6. THE APPROVED SUBGRADE SHOULD BE SCARIFIED, MOISTURE CONDITIONED AND PROPERLY RECOMPACTED.
7. IT IS ANTICIPATED THAT SITE EXCAVATIONS AND REWORK OF SOILS BELOW BUILDING FOOTPRINT WILL BE APPROXIMATELY 5.5 FEET BELOW EXISTING GRADE.
8. DURING WET WEATHER, SUBGRADE STABILITY PROBLEMS SHOULD BE EXPECTED. IN THE EVENT THE SUBGRADE IS EXPOSED TO SIGNIFICANT INCREASES IN MOISTURE AND SUBGRADE STABILITY PROBLEMS DEVELOP, OVEREXCAVATION SHOULD BE EXPECTED TO ACHIEVE A STABLE SUBGRADE.
9. PROVIDE POSITIVE DRAINAGE AWAY FROM EXCAVATIONS SO AS NOT TO ALLOW STANDING WATER FOR LONG PERIODS OF TIME.
10. PROVIDE A VAPOR BARRIER CONSISTING OF 10 MIL POLYETHYLENE SHEETING PLACED DIRECTLY ABOVE THE BASE COURSE.
11. DO NOT PUNCTURE THE VAPOR BARRIER. LAP AND TAPE ENDS.
12. PERFORM ALL SITEWORK UNDER THE DIRECT SUPERVISION OF THE GEOTECHNICAL ENGINEER.
13. REFERENCE THE SOILS REPORT FOR ANY QUESTIONS CONCERNING SUBGRADE PREPARATION, SITE CONDITIONS OR FOUNDATION PLACEMENT.

CONCRETE

1. ALL CONCRETE SHALL BE NORMAL WEIGHT, TYPE II OR TYPE V CEMENT, WITH A MINIMUM COMPRESSIVE STRENGTH OF 3,500 PSI AT 28 DAYS, (U.N.O.).
2. MINIMUM CEMENT CONTENT SHALL BE 5 SACKS PER CUBIC YARD.
3. TYPE C OR F FLY ASH MAY BE USED UP TO 20% OF TOTAL CEMENT CONTENT BY VOLUME. THIS IS ONLY FOR CONCRETE SPECIFIED IN THESE STRUCTURAL DRAWINGS. REFER TO SPECIFICATIONS BY OTHER DISCIPLINES.
4. MAXIMUM SLUMP SHALL BE 5 IN., U.N.O.
5. MATERIALS AND WORKMANSHIP SHALL CONFORM TO THE AMERICAN CONCRETE INSTITUTE'S "SPECIFICATIONS FOR STRUCTURAL CONCRETE FOR BUILDINGS", ACI 301.
6. CONCRETE MIX SHALL NOT USE ANY ADMIXTURES WHICH CONTAIN CALCIUM CHLORIDE.
7. CONCRETE TEST REPORTS SHALL BE MADE AVAILABLE AT THE JOB SITE. CONTRACTOR SHALL SUBMIT CONCRETE MIX DESIGN PER SPECIFICATIONS PRIOR TO PLACEMENT CONCRETE.

REINFORCING STEEL

1. BARS SHALL BE ASTM A615, GRADE 60.
2. DETAIL, FABRICATE, AND PLACE IN CONFORMANCE WITH ACI 315 AND 318.
3. LAP ALL REINFORCING STEEL 40 BAR DIAMETERS (U.N.O.).
4. LAP CONTINUOUS BARS IN GRADE BEAMS 40 BAR DIAMETERS (U.N.O. ON DRAWINGS). TOP BARS TO BE SPLICED BETWEEN SUPPORTS AND BOTTOM BARS TO BE SPLICED AT SUPPORTS, AS APPLICABLE.
5. PROVIDE ACCESSORIES FOR SUPPORT OF ALL REINFORCING.
6. SUBMIT SHOP DRAWINGS SHOWING ALL REINFORCING FOR APPROVAL BY THE STRUCTURAL ENGINEER OF RECORD.
7. THE FOLLOWING MINIMUM CONCRETE COVER SHALL BE PROVIDED FOR REINFORCEMENT:

	MINIMUM COVER, IN.
A. CONCRETE CAST AGAINST AND PERMANENTLY EXPOSED TO EARTH	3
B. CONCRETE EXPOSED TO EARTH OR WEATHER:	
#6 THROUGH #18 BAR	2
#5 BAR, W31 OR D31 WIRE, AND SMALLER	1½
C. CONCRETE NOT EXPOSED TO WEATHER OR IN CONTACT WITH GROUND:	
SLABS, WALLS, JOISTS:	
#14 AND #18 BARS	1½
#11 BAR AND SMALLER	¾
BEAMS, COLUMNS:	
PRIMARY REINFORCEMENT, TIES, STIRRUPS, SPIRALS	1½

CONCRETE MASONRY UNITS

1. CONCRETE MASONRY UNITS SHALL CONFORM TO ASTM C90, TYPE 1, WITH COMPRESSIVE STRENGTH ($f'm$) OF 1,500 PSI
2. GROUT FOR CONCRETE MASONRY SHALL HAVE A MINIMUM COMPRESSIVE STRENGTH OF 2,500 PSI
3. MORTAR SHALL BE TYPE N, U.N.O.
4. REINFORCING IN MASONRY WALLS SHALL BE GRADE 60, ASTM A615.
5. TYPICAL REINFORCING:
   VERTICAL - REF. PLAN FOR SIZE AND SPACING
   HORIZONTAL - 9 GAGE WIRE LADDER-MESH (BY HOHMANN & BARNARD INC.) OR APPROVED EQUAL AT 16" O.C. IN MASONRY WALLS, EXCEPT AT 8" O.C. FOR WALL BELOW GRADE OR STACK BOND WALLS (U.N.O. ON DRAWINGS).
6. MATERIALS AND WORKMANSHIP SHALL CONFORM TO DESIGN REQUIREMENTS BASED UPON THE AMERICAN CONCRETE INSTITUTES "BUILDING CODE REQUIREMENTS FOR MASONRY STRUCTURES", ACI 530.

STRUCTURAL WOOD

1. WOOD FRAMING SHALL COMPLY WITH THE SOUTHERN PINE INSPECTION BUREAU, OR SHALL CONFORM TO SPECIFICATIONS AS PUBLISHED BY THE WESTERN WOODS PRODUCTS ASSOCIATION.
2. WOOD FRAMING 2 INCHES X 4 INCHES AND LARGER SHALL BE NO. 2 SOUTHERN PINE, NO. 2 DOUGLAS FIR LARCH, OR EQUIVALENT (U.N.O.).
3. ALL EXPOSED WOOD FRAMING, UNLESS NOTED OTHERWISE, SHALL BE "SELECT" GRADE LUMBER.
4. ALL PLATES IN CONTACT WITH CONCRETE OR MASONRY SHALL BE PRESSURE TREATED (USE CATEGORY 2 AS SPECIFIED BY AWPA) FOR MOISTURE PROTECTION. ALL WOOD EXPOSED TO WEATHER SHALL BE PRESSURE TREATED (USE CATEGORY 3B AS SPECIFIED BY AWPA) OR WESTERN RED CEDAR.
5. STRUCTURAL COMPOSITE LUMBER (SCL)
   A. STRUCTURAL CAPACITIES FOR STRUCTURAL COMPOSITE LUMBER SHALL BE ESTABLISHED AND MONITORED IN ACCORDANCE WITH ASTM D5456.
   B. MINIMUM DESIGN VALUES FOR SCL MEMBER SHALL CONSIST OF THE FOLLOWING:
      a. LAMINATED VENEER LUMBER (LVL); 1¾" TO 7" THICK MEMBERS (BEAM/JOIST ORIENTATION)
         $E = 2.0x10^6$ PSI $F_{c(PERP)}$ = 750 PSI
         F_b = 2,900 PSI $F_{c(PARAL)}$ = 2,635 PSI
         F_v = 285 PSI SG = 0.50
         F_t = 1,660 PSI
6. ROOF DECK
   A. ALL ROOF DECK SHALL BE APA RATED GRADE PLYWOOD OR OSB (ORIENTED STRAND BOARD). GRADES MAY HAVE EITHER AN EXTERIOR OR EXPOSURE I DESIGNATION (U.N.O.).
   B. ROOF SHEATHING SHALL BE 15/32 INCH THICK MINIMUM (40/20) U.N.O.
   C. STAGGER ENDS OF SHEETS.
   D. PROVIDE BLOCKING AT EDGES OF ALL ROOF SHEETS. PLYWOOD CLIPS MAY BE USED AT ROOF INSTEAD OF BLOCKING, UNLESS BLOCKING REQUIRED FOR NAILING.
   E. NAIL EDGES OF ROOF SHEETS AT 6 IN. O.C. MAXIMUM (U.N.O.).
   F. NAIL FACES OF ROOF SHEETS AT 12 IN. O.C. MAXIMUM.
   G. USE MINIMUM 10d COMMON NAILS (U.N.O.).
7. WALL SHEATHING
   A. ALL WALL SHEATHING SHALL BE APA RATED GRADE PLYWOOD OR OSB (ORIENTED STRAND BOARD). GRADES MAY HAVE EITHER AN EXTERIOR OR EXPOSURE I DESIGNATION (U.N.O.).
   B. WALL SHEATHING SHALL BE 15/32 INCH THICK MINIMUM (32/16) U.N.O.
   C. STAGGER ENDS OF SHEETS.
   D. PROVIDE BLOCKING AT EDGES OF ALL SHEARWALL SHEETS.
   E. NAIL EDGES OF SHEARWALL SHEETS PER SCHEDULE ON PLAN (OTHER WALLS AT 6 IN. O.C. MAXIMUM).
   F. NAIL FACES OF WALL SHEETS AT 12 IN. O.C. MAXIMUM.
   G. USE MINIMUM 10d COMMON NAILS (U.N.O.).
8. CONNECTORS SHALL BE AS MANUFACTURED BY THE SIMPSON CO. OR APPROVED EQUAL. CONNECTORS USED WITH PRESSURE TREATED LUMBER OR IN UNCONDITIONED SPACE, SHALL HAVE THE ZMAX (6185) COATING. ALL NAILS USED FOR CONNECTORS SHALL MATCH THOSE SPECIFIED BY THE SUPPLIER'S PRODUCT CATALOG.
9. NAILING, UNLESS NOTED OTHERWISE, SHALL BE PER THE 2015 INTERNATIONAL BUILDING CODE.
10. ALL REFERENCES TO NAILS ON THE STRUCTURAL DRAWINGS ARE BASED ON COMMON WIRE NAILS (U.N.O.) WITH THE FOLLOWING DIMENSIONS, TYPICAL, U.N.O.
    8d COMMON: 0.131" DIA. X 2½" LONG
    10d COMMON: 0.148" DIA. X 3" LONG
    16d COMMON: 0.162" DIA. X 3½" LONG
    POWER AUTOMATED NAIL GUNS SHALL USE NAILS TO MATCH THE ABOVE NAILS AS SPECIFIED.

POST-INSTALLED ANCHORS

1. EXCEPT WHERE INDICATED ON THE DRAWINGS, THE FOLLOWING HILTI OR SIMPSON PRODUCTS MAY BE USED. CONTACT HILTI AT (800) 879-8000 OR SIMPSON AT WWW.STRONGTIE.COM FOR PRODUCT RELATED QUESTIONS.
   A. ANCHORAGE TO CONCRETE
      a. ADHESIVE ANCHORS FOR CRACKED AND UNCRACKED CONCRETE USE:
         (1) HILTI HIT-HY 200 SAFE SET SYSTEM WITH HILTI HIT-Z ROD OR HAS -E THREADED ROD PER ICC-ES ESR-3187.
         (2) SIMPSON SET-3G SYSTEM WITH F1554 THREADED ROD PER ICC-ES ESR-4057
      b. MEDIUM DUTY MECHANICAL ANCHORS FOR CRACKED AND UNCRACKED CONCRETE USE:
         (1) HILTI KWIK HUS EZ AND KWIK HUS EZ-I SCREW ANCHORS PER ICC-ES ESR-3027
         (2) SIMPSON TITEN HD SCREW ANCHORS PER ICC-ES ESR-2713
         (3) SIMPSON TITEN HD STAINLESS STEEL SCREW ANCHOR PER IAMPO UES ER-493
   B. REBAR DOWELING INTO CONCRETE
      a. ADHESIVE ANCHORS FOR CRACKED AND UNCRACKED CONCRETE USE:
         (1) HILTI HIT-HY 200 SAFE SET SYSTEM WITH HILTI HOLLOW DRILL BIT SYSTEM WITH CONTINUOUSLY DEFORMED REBAR PER ICC ESR-3187.
         (2) SIMPSON SET-3G SYSTEM WITH CONTINUOUSLY DEFORMED REBAR PER ICC-ES ESR-4057.
2. ANCHOR CAPACITY USED IN DESIGN SHALL BE BASED ON THE TECHNICAL DATA PUBLISHED OR SUCH OTHER METHOD AS APPROVED BY THE STRUCTURAL ENGINEER OF RECORD. SUBSTITUTION REQUESTS FOR ALTERNATE PRODUCTS MUST BE APPROVED IN WRITING BY THE STRUCTURAL ENGINEER OF RECORD PRIOR TO USE. CONTRACTOR SHALL PROVIDE CALCULATIONS DEMONSTRATING THAT THE SUBSTITUTED PRODUCT IS CAPABLE OF ACHIEVING THE PERFORMANCE VALUES OF THE SPECIFIED PRODUCT. SUBSTITUTIONS WILL BE EVALUATED BY THEIR HAVING AN ICC ESR SHOWING COMPLIANCE WITH THE RELEVANT BUILDING CODE FOR SEISMIC USES, LOAD RESISTANCE, INSTALLATION CATEGORY, AND AVAILABILITY OF COMPREHENSIVE INSTALLATION INSTRUCTIONS. ADHESIVE ANCHOR EVALUATION WILL ALSO CONSIDER CREEP, IN-SERVICE TEMPERATURE AND INSTALLATION TEMPERATURE.
3. INSTALL ANCHORS PER THE MANUFACTURER INSTRUCTIONS, AS INCLUDED IN THE ANCHOR PACKAGING.
4. CONTRACTOR SHALL USE THE NECESSARY MEANS, AS REQUIRED BY OSHA, TO PROTECT FROM DUST DURING DRILLING OPERATIONS.
5. INSTALL ACCORDING TO MANUFACTURER'S SPECIFICATIONS. THREADED ROD AND REBAR DIAMETERS AND EMBEDMENT LENGTHS SHALL BE AS NOTED ON DRAWINGS.
6. OVERHEAD ADHESIVE ANCHORS MUST BE INSTALLED USING PRODUCTS WHICH HAVE SPECIFIC APPLICATIONS THAT ARE INTENDED FOR OVERHEAD USE.
7. THE CONTRACTOR SHALL ARRANGE AN ANCHOR MANUFACTURER'S REPRESENTATIVE TO PROVIDE ONSITE INSTALLATION TRAINING FOR ALL OF THEIR ANCHORING PRODUCTS SPECIFIED. THE STRUCTURAL ENGINEER OF RECORD MUST RECEIVE DOCUMENTED CONFIRMATION THAT ALL OF THE CONTRACTOR'S PERSONNEL WHO INSTALL ANCHORS ARE TRAINED PRIOR TO THE COMMENCEMENT OF INSTALLING ANCHORS.
8. ANCHOR CAPACITY IS DEPENDANT UPON SPACING BETWEEN ADJACENT ANCHORS AND PROXIMITY OF ANCHORS TO EDGE OF CONCRETE. INSTALL ANCHORS IN ACCORDANCE WITH SPACING AND EDGE CLEARANCES INDICATED ON THE DRAWINGS.
9. EXISTING REINFORCING BARS IN THE CONCRETE STRUCTURE MAY CONFLICT WITH SPECIFIC ANCHOR LOCATIONS. UNLESS NOTED ON THE DRAWINGS THAT THE BARS CAN BE CUT, THE CONTRACTOR SHALL REVIEW THE EXISTING STRUCTURAL DRAWINGS AND SHALL UNDERTAKE TO LOCATE THE POSITION OF THE REINFORCING BARS AT THE LOCATIONS OF THE CONCRETE ANCHORS, BY FERROSCAN, GPR, X-RAY, CHIPPING OR OTHER MEANS.

Statement of Special Inspections

This Statement of Special Inspections / Quality Assurance Plan includes the following building systems:

- ☒ Soils and Foundations
- ☒ Cast-in-Place Concrete
- ☐ Masonry
- ☐ Structural Steel
- ☐ Wood Construction
- ☐ Special Cases

General Notes

The inspectors and testing agencies shall be engaged by the Owner or the Owner's Agent, and not by the Contractor or Subcontractor whose work is to be inspected or tested. Any conflict of interest must be disclosed to the Building Official, prior to commencing work.

The qualifications of all personnel performing Special Inspections and testing activities are subject to the approval of the Building Official and E.O.R. The credentials of all inspectors and testing technicians shall be provided if requested.

The special inspectors shall keep records of inspections and shall furnish inspection reports to the owner, Engineer of Record (E.O.R.) and Architect of Record (A.O.R.). Field and testing result reports shall be submitted to all designated parties as they are completed. The reports shall indicate that the work performed was done in accordance to the construction drawings. Discrepancies shall be brought to the attention of the general contractor for correction. If the discrepancies are not corrected, the discrepancies shall be brought to the attention of the E.O.R. prior to completion of that phase of work. A final report that documents required special inspections and corrections of discrepancies shall be submitted by the General Contractor to the Owner, E.O.R. and A.O.R.

Cast-in-Place Concrete

Item	Scope	Monitoring: Periodic (P) Continuous (C)
1. Mix Design	*Review concrete batch tickets and verify compliance with approved mix design. Verify that water added at the site does not exceed that allowed by the mix design. Submit proposed mix design of each class of concrete to Structural Engineer of Record and to inspection and testing firm for review prior to commencement of work.*	*P*
2. Material Certification	*Review for conformance to contract documents. Submit to Structural Engineer of Record for review.*	*P*
3. Reinforcement Installation	*Inspect size, spacing, cover, positioning and grade of reinforcing steel. Verify that reinforcing bars are free of form oil or other deleterious materials. Inspect bar laps and mechanical splices. Verify that bars are adequately tied and supported on chairs or bolsters. Submit certified copies of mill test report of reinforcement materials analysis.*	*P*
4. Anchor Rods	*Inspect size, positioning and embedment of anchor rods. Inspect concrete placement and consolidation around anchors.*	*C*
5. Concrete Placement	*Inspect placement of concrete. Verify that concrete conveyance and depositing avoids segregation or contamination. Verify that concrete is properly consolidated.*	*C*
6. Sampling and Testing of Concrete	*Test concrete compressive strength (ASTM C31 & C39), slump (ASTM C143), air-content (ASTM C231 or C173) and temperature (ASTM C1064). Three concrete test cylinders will be taken for every 75 or less cubic yards of each class of concrete placed, or concrete placed on any given day. One additional test cylinder will be taken during cold weather concreting, cured on job site under same conditions as concrete represents.*	*C*
7 Curing and Protection	*Inspect curing, cold weather protection and hot weather protection procedures.*	*P*

Note: Special Inspection is not required for flatwork patios, driveways and sidewalks, on grade not shown on structural drawings.

Soils and Foundations

Item	Scope	Monitoring: Periodic (P) Continuous (C)
1. Shallow Foundations	*Inspect soils below footings for adequate bearing capacity and consistency with geotechnical report.*	*P*
	Inspect removal of unsuitable material and preparation of subgrade prior to placement of controlled fill.	*C*
2. Controlled Structural Fill	*Perform sieve tests (ASTM D422 & D1140) and modified Proctor tests (ASTM D1557) of each source of fill material.*	*C*
	Inspect placement, lift thickness and compaction of controlled fill.	
	Test density of each lift of fill by nuclear methods (ASTM D2922)	
	Verify extent and slope of fill placement.	

Note:
1. Special Inspection is not required during placement of controlled fill having a total depth of 12 inches or less.

GHA
Architecture / Development
14901 Quorum Drive
Suite 300
Dallas Texas 75254
Ph: (972) 239-8884
Fax: (972) 239-5054

STATE OF MICHIGAN RONALD ROBERTS ENGINEER No. 32994 PROFESSIONAL ENGINEER 12-20-2021

Ronald Roberts Associates, Inc.
Consulting Engineers
2948 N. Stemmons Freeway
Dallas, Texas 75247-6103
Phone: (214) 637-6299
www.rara.net

EST. 1998 SCOOTER'S COFFEE

PROJECT ADDRESS:
1490 WEST ANN ARBOR ROAD
PLYMOUTH, MI 48170

REVISIONS:

TITLE:
STRUCTURAL NOTES & SPECIAL INSPECTIONS

DATE:
09/16/2021

PROJECT NO.
210536

- ☐ DESIGN DEVELOPMENT
- ☐ PERMIT SUBMITTAL
- ☒ BID PACKAGE
- ☐ CONSTRUCTION ISSUE

SHEET NO.
S0.0

THIS DRAWING AND ITS CONTENTS ARE THE COPYRIGHTED PROPERTY OF FM GROUP INC. USE THEREOF IS LIMITED TO THE SPECIFIC PROJECT AND SITE SET FORTH ABOVE, AND MAY NOT BE OTHERWISE USED OR REPRODUCED, IN WHOLE OR IN PART, WITHOUT THE WRITTEN PERMISSION OF FM GROUP INC. THIS DRAWING IS TO BE RETURNED UPON REQUEST.

X:\PROJECTS\21308 Scooters Coffee Plymouth MI\CAD\DISTRUCT\21308 Issue for Permit 12.20.2021\21308S0.0.dwg, S0.0, 12/20/2021 2:38:14 PM, cnoberts, DWG To PDF.pc3, ARCH full bleed D (24.00 x 36.00 Inches), 1:1

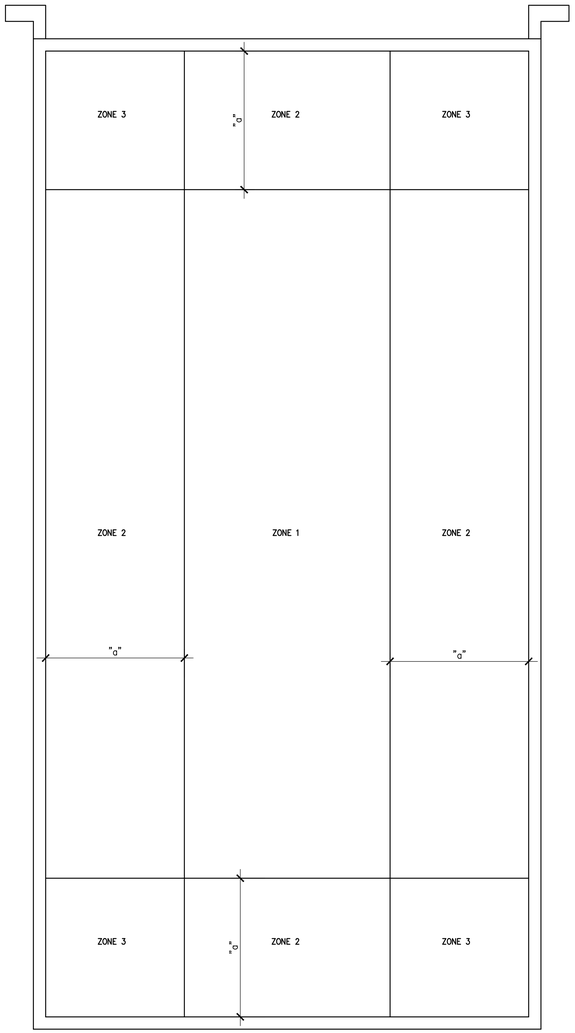

01 COMPONENTS & CLADDING WIND UPLIFT ZONES DIAGRAM

SCALE: 3/8"=1'-0"

NOTES:

1. "a" = 5'-3" DIMENSION FROM INSIDE FACE OF WALL STUD.

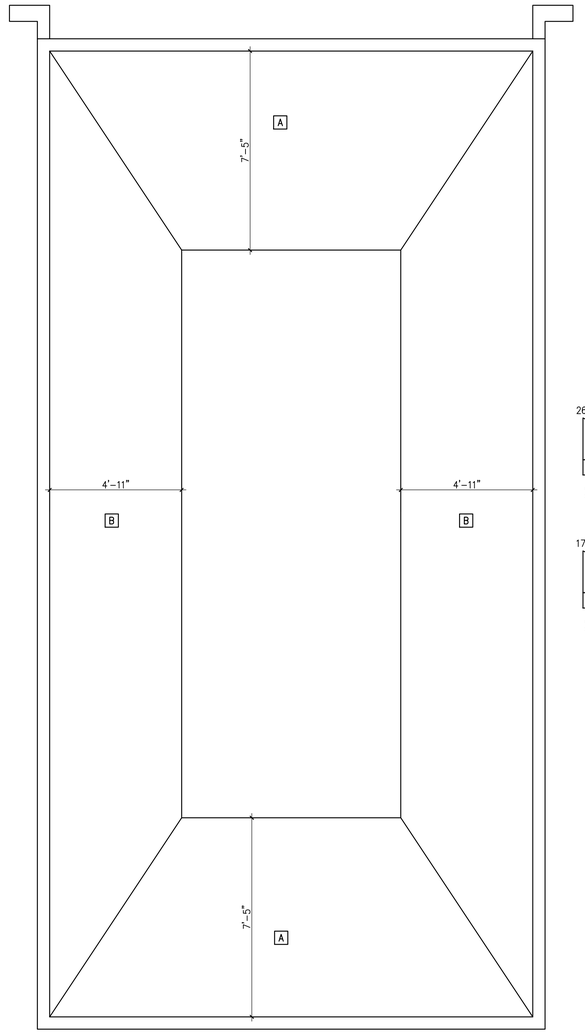

02 SNOW DRIFT DIAGRAM

SCALE: 3/8"=1'-0"

NOTES:

1. DRIFT LOADS INDICATED ARE TO BE APPLIED ON TOP OF UNIFORM SNOW LOAD.
2. X – INDICATES DRIFT TYPE.

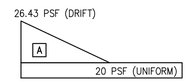

SNOW DRIFT DIAGRAM

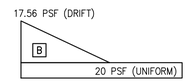

SNOW DRIFT DIAGRAM

SHEARWALL SCHEDULE			
TYPE	NAIL SPACING	HOLDOWN	ANCHOR BOLTS
1	10d @ 6" O.C.	HDU8-SDS2.5	⅝"ø @ 16" O.C.
2	10d @ 6" O.C.	HDU8-SDS2.5	⅝"ø @ 24" O.C.
3	10d @ 6" O.C.	HDU5-SDS2.5	⅝"ø @ 32" O.C.
4	10d @ 6" O.C.	HDU5-SDS2.5	⅝"ø @ 32" O.C.

X – DESIGNATES SHEARWALL TYPE – REFER TO PLANS ON S1.0

NOTES:

1. USE 10d COMMON NAILS.
2. NAIL PANEL FACES @ 12" O.C.
3. USE ½" PLYWOOD ON EXTERIOR
4. STAGGER PLYWOOD JOINT AND SILL PLATE NAILING.
5. FRAMING MEMBERS OR BLOCKING SHALL BE PROVIDED AT THE EDGES OF ALL SHEETS IN SHEARWALLS.
6. REFER TO 01/S2.1 FOR HOLD DOWN ANCHOR EMBEDMENT.
7. HOLD DOWN ANCHORS MUST BE TIED IN PLACE PRIOR TO FOUNDATION INSPECTION.

*8. FRAMING AT ADJOINING PANEL EDGES SHALL BE 3 INCH NOMINAL OR THICKER AND NAILS SHALL BE STAGGERED WHERE NAILS ARE SPACED AT 2" O.C. OR ARE ON EACH FACE.

03 SHEARWALL SCHEDULE

SCALE: N.T.S.

HEADER SCHEDULE	
TYPE	SIZE
A	(3) 2x10 W/ (2) ½" PLYWOOD SPACERS
B	(3) 2x8 W/ (2) ½" PLYWOOD SPACERS
C	(3) 2x8 W/ (2) ½" PLYWOOD SPACERS

X – DESIGNATES HEADER TYPE. REFER TO PLANS ON S1.0

NOTES:

1. REFER TO 05/S3.0 FOR TYPICAL HEADER FRAMING REQUIREMENTS.

04 HEADER SCHEDULE

SCALE: N.T.S.

GHA
Architecture / Development
14901 Quorum Drive
Suite 300
Dallas Texas 75254
Ph: (972) 239-8884
Fax: (972) 239-5054

STATE OF MICHIGAN
RONALD ROBERTS
ENGINEER No. 32994
LICENSED PROFESSIONAL ENGINEER
12-20-2021

Ronald Roberts Associates, Inc.
Consulting Engineers
2948 N. Stemmons Freeway
Dallas, Texas 75247-6103
Phone: (214) 637-6299
www.rara.net

EST. 1998 SCOOTER'S COFFEE

PROJECT ADDRESS:
1490 WEST ANN ARBOR ROAD
PLYMOUTH, MI 48170

REVISIONS:

TITLE:
DIAGRAMS & SCHEDULES

DATE:
09/16/2021

PROJECT NO.
210536

- ☐ DESIGN DEVELOPMENT
- ☐ PERMIT SUBMITTAL
- ☒ BID PACKAGE
- ☐ CONSTRUCTION ISSUE

SHEET NO.
S0.1

THIS DRAWING AND ITS CONTENTS ARE THE COPYRIGHTED PROPERTY OF FM GROUP INC. USE THEREOF IS LIMITED TO THE SPECIFIC PROJECT AND SITE SET FORTH ABOVE, AND MAY NOT BE OTHERWISE USED OR REPRODUCED, IN WHOLE OR IN PART, WITHOUT THE WRITTEN PERMISSION OF FM GROUP INC. THE ARCHITECT. THIS DRAWING IS TO BE RETURNED UPON REQUEST.

X:\PROJECTS\21308 Scooters Coffee Plymouth MI\CADD\STRUCT\21308 Issue for Permit 12.20.2021\21308S0.1.dwg, S0.1, 12/20/2021 2:39:05 PM, cnberlis, DWG To PDF.pc3, ARCH full bleed D (24.00 x 36.00 Inches), 1:1

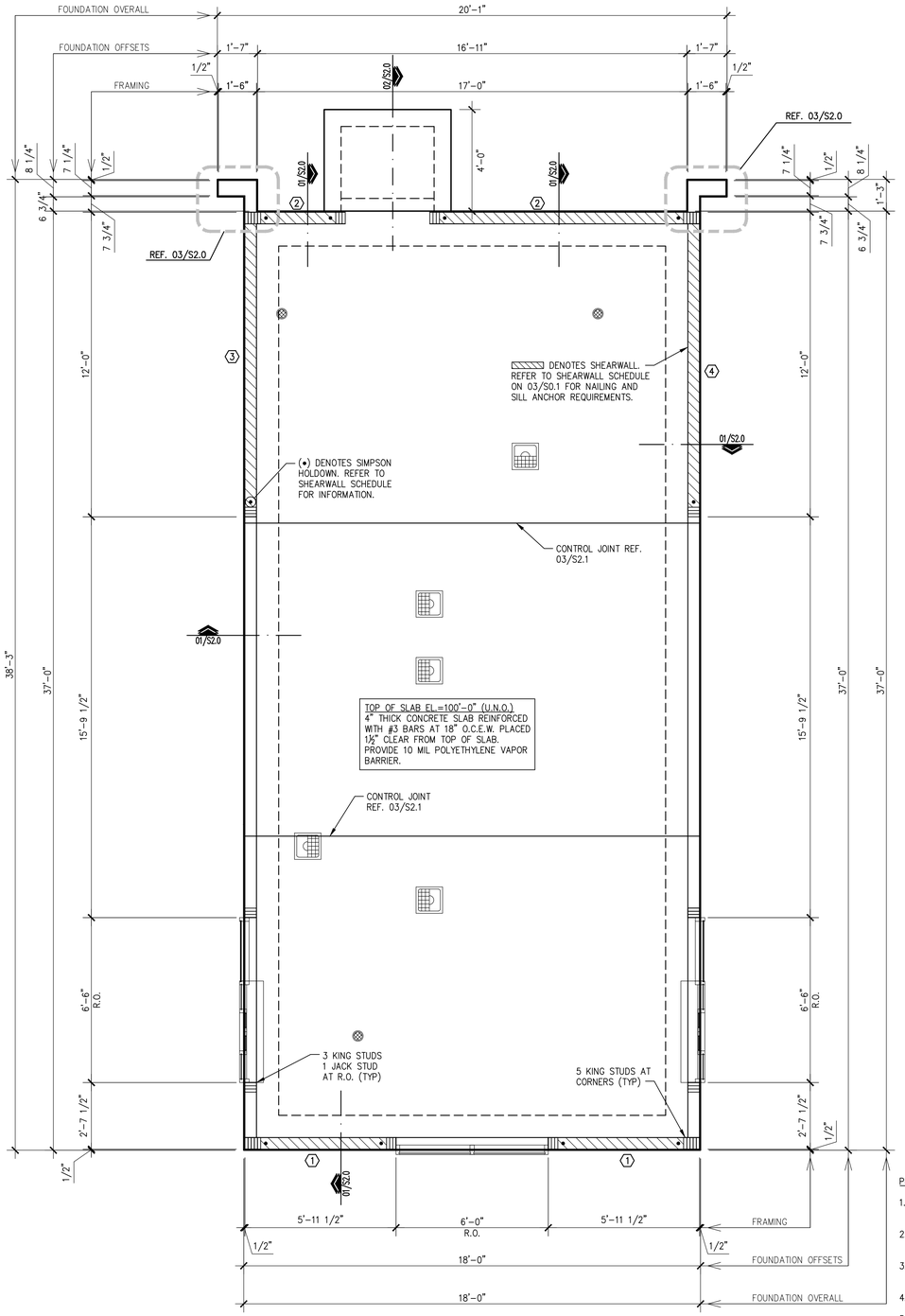

N

01 FOUNDATION PLAN

SCALE: 3/8"=1'-0"

PLAN NOTES:

1. REF. SHEET S0.0 FOR STRUCTURAL NOTES AND SPECIAL INSPECTION REQUIREMENTS.
2. REF. 02/S2.1 FOR TYPICAL GRADE BEAM PENETRATION DETAIL AS REQUIRED.
3. REF. 04/S2.1 FOR TYPICAL CORNER BAR DETAIL AS REQUIRED.
4. REF. 05/S2.1 FOR TYPICAL DRAIN DETAIL AS REQUIRED.
5. REF. 06/S2.1 FOR TYPICAL CURB DETAIL AS REQUIRED.
6. REF. 07/2.1 FOR LIGHT POST DETAIL AS REQUIRED.
7. REF. 08/S2.1 FOR DUMPSTER ENCLOSURE WALL.
8. REF. 09/S2.1 FOR BOLLARD DETAIL AS REQUIRED.
9. (X) DENOTES HEADER TYPE. REFER TO SCHEDULE 04/S0.1 AND TYP. SECTION 05/S3.0
10. REF. 06/S3.0 FOR DIAPHRAGM NAILING.

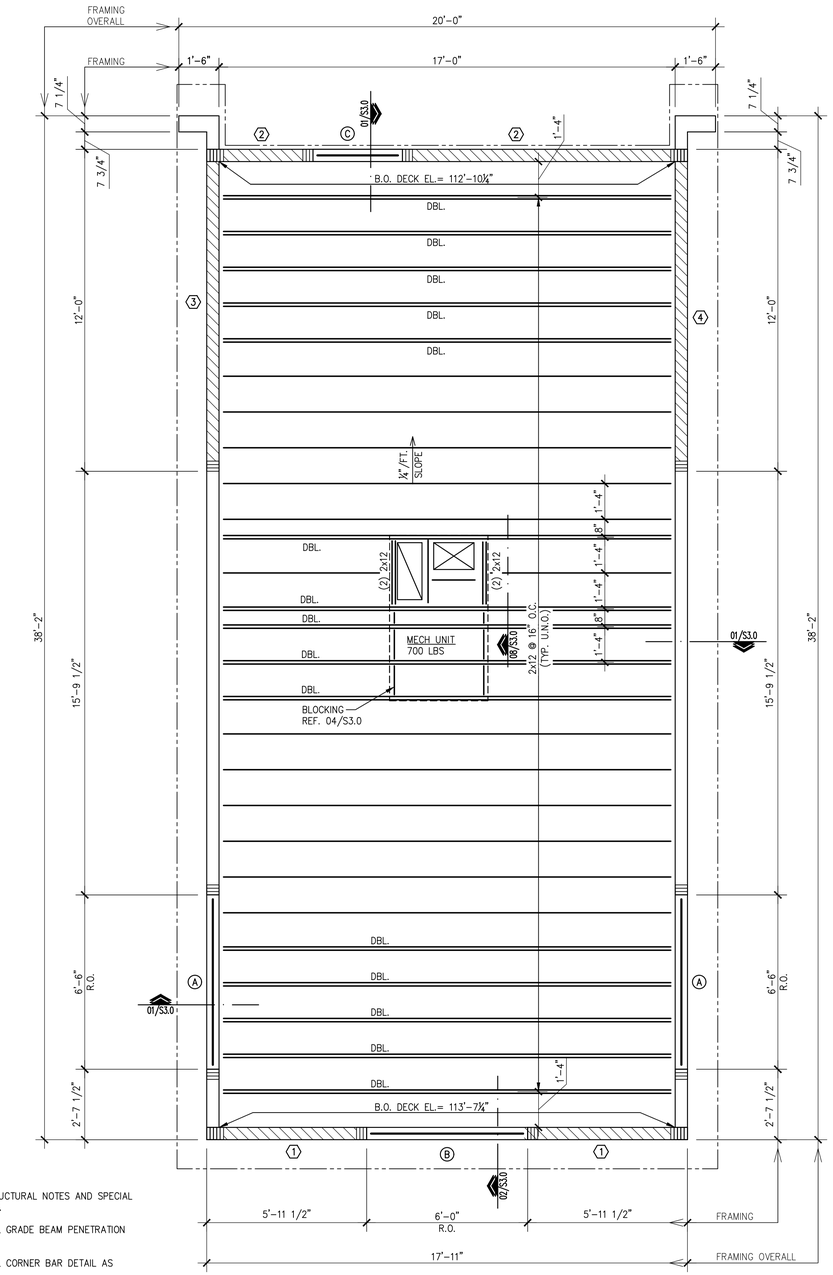

N

02 ROOF FRAMING PLAN

SCALE: 3/8"=1'-0"

GHA
Architecture / Development
14901 Quorum Drive
Suite 300
Dallas Texas 75254
Ph: (972) 239-8884
Fax: (972) 239-5054

STATE OF MICHIGAN
RONALD ROBERTS
ENGINEER No. 32994
PROFESSIONAL ENGINEER
12-20-2021

Ronald Roberts Associates, Inc.
Consulting Engineers
2948 N. Stemmons Freeway
Dallas, Texas 75247-6103
Phone: (214) 637-6299
www.rara.net

EST. 1998 SCOOTER'S COFFEE

PROJECT ADDRESS:
1490 WEST ANN ARBOR ROAD
PLYMOUTH, MI 48170

REVISIONS:

TITLE:
FOUNDATION & ROOF FRAMING PLANS

DATE:
09/16/2021

PROJECT NO.
210536

- ☐ DESIGN DEVELOPMENT
- ☐ PERMIT SUBMITTAL
- ☒ BID PACKAGE
- ☐ CONSTRUCTION ISSUE

SHEET NO.
S1.0

THIS DRAWING AND ITS CONTENTS ARE THE COPYRIGHTED PROPERTY OF FM GROUP INC. USE THEREOF IS LIMITED TO THE SPECIFIC PROJECT AND SITE SET FORTH ABOVE, AND MAY NOT BE OTHERWISE USED OR REPRODUCED, IN WHOLE OR IN PART, WITHOUT THE WRITTEN PERMISSION OF FM GROUP INC. THE ARCHITECT. THIS DRAWING IS TO BE RETURNED UPON REQUEST.

X:\PROJECTS\21308 Scooters Coffee Plymouth MI\CADD\STRUCT\21308 Issue for Permit 12.20.2021\21308S1.0.dwg, S1.0, 12/20/2021 2:38:56 PM, ronberts, DWG To PDF.pc3, ARCH full bleed D (24.00 x 36.00 Inches), 1:1

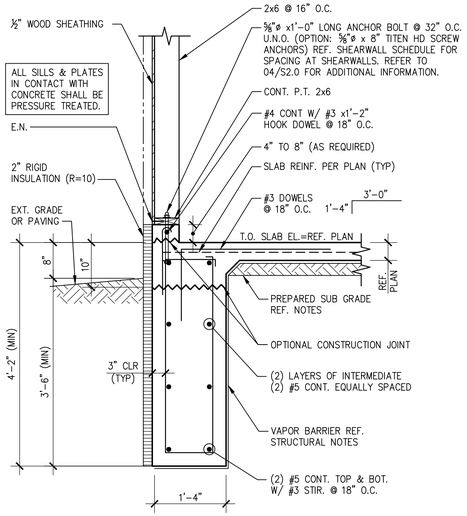

01 SECTION
SCALE: 3/4"=1'-0"

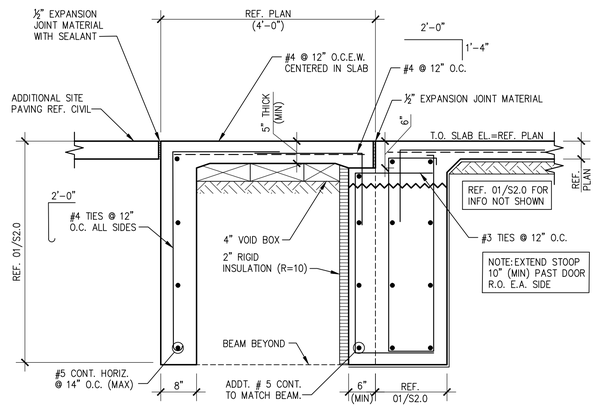

02 TYPICAL STOOP SECTION (MONOLITHIC)
SCALE: 3/4"=1'-0"

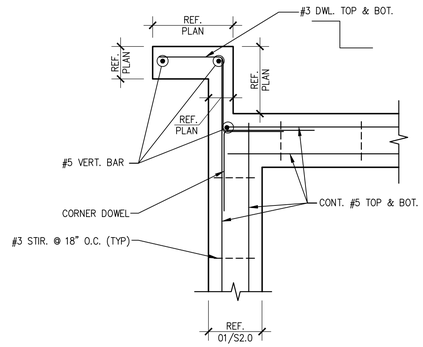

03 POPOUT CONCRETE FOOTING
SCALE: 3/4"=1'-0"

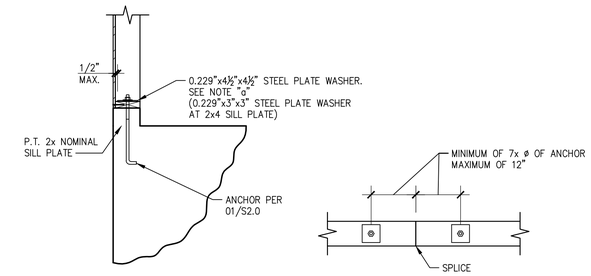

NOTES:

a. IF STANDARD CUT WASHER IS PLACED BETWEEN PLATE WASHER AND NUT, THE HOLE IN THE PLATE WASHER MAY BE DIAGONALLY SLOTTED UP TO 1¾" WITH WIDTH UP TO 3/16" LARGER THAN BOLT DIAMETER.

04 TYP. SILL PLATE ANCHORAGE
SCALE: 3/4"=1'-0"

THIS DRAWING AND ITS CONTENTS ARE THE COPYRIGHTED PROPERTY OF FM GROUP INC. USE THEREOF IS LIMITED TO THE SPECIFIC PROJECT AND SITE SET FORTH ABOVE, AND MAY NOT BE OTHERWISE USED OR REPRODUCED, IN WHOLE OR IN PART, WITHOUT THE WRITTEN PERMISSION OF FM GROUP INC. THIS DRAWING IS TO BE RETURNED UPON REQUEST.

X:\PROJECTS\210536 Scooters Coffee Plymouth MI\CADD\STRUCT\210536 Issue for Permit 12.20.2021\210536S2.0.dwg, S2.0, 12/20/2021 2:38:45 PM, ronberts, DWG To PDF.pc3, ARCH full bleed D (24.00 x 36.00 Inches), 1:1

GHA
Architecture / Development
14901 Quorum Drive
Suite 300
Dallas Texas 75254
Ph: (972) 239-8884
Fax: (972) 239-5054

STATE OF MICHIGAN
RONALD ROBERTS
ENGINEER No. 32994
PROFESSIONAL ENGINEER
12-20-2021

Ronald Roberts Associates, Inc.
Consulting Engineers
2948 N. Stemmons Freeway
Dallas, Texas 75247-6103
Phone: (214) 637-6299
www.rara.net

EST. 1998 SCOOTER'S COFFEE

PROJECT ADDRESS:
1490 WEST ANN ARBOR ROAD
PLYMOUTH, MI 48170

REVISIONS:

TITLE:
FOUNDATION SECTIONS & DETAILS

DATE:
09/16/2021

PROJECT NO.
210536

- [ ] DESIGN DEVELOPMENT
- [ ] PERMIT SUBMITTAL
- [x] BID PACKAGE
- [ ] CONSTRUCTION ISSUE

SHEET NO.
S2.0

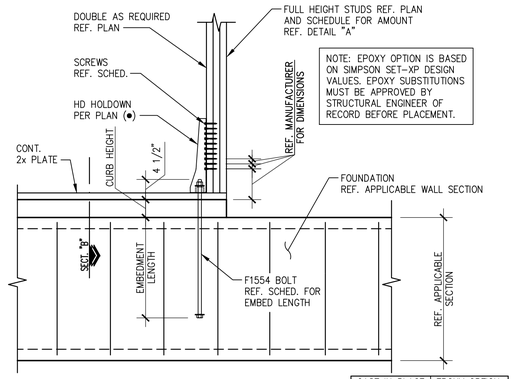

NOTE: EPOXY OPTION IS BASED ON SIMPSON SET-XP DESIGN VALUES. EPOXY SUBSTITUTIONS MUST BE APPROVED BY STRUCTURAL ENGINEER OF RECORD BEFORE PLACEMENT.

HOLDOWN	POST/2x	BOLT/SCREW #	ANCH. BOLT	EDGE DISTANCE	CAST IN PLACE REQUIREMENTS BOLT EMBED	EPOXY OPTION REQUIREMENTS BOLT EMBED
HDU5-SDS2.5	3	(14) SDS ¼"x2½"	⅝"ø	14"	1'-0"	1'-0"
HDU8-SDS2.5	3	(20) SDS ¼"x2½"	⅞"ø	14"	1'-0"	1'-0"
HDU11-SDS2.5	4x6	(30) SDS ¼"x2½"	1"ø	16"	1'-2"	1'-4"
HDU14-SDS2.5	6x6	(36) SDS ¼"x2½"	1"ø	16"	1'-2"	1'-4"

01 TYP. HOLDOWN DETAIL
SCALE: 3/4"=1'-0"

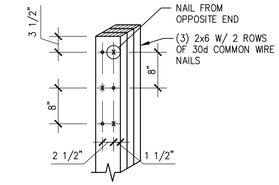

DETAIL "A"

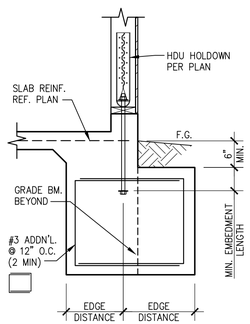

SECT. "B"

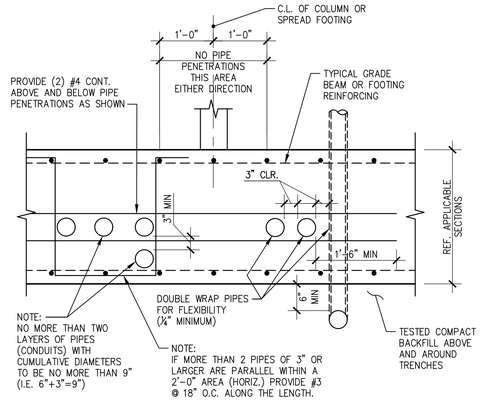

02 TYP. PENETRATION THRU FOOTINGS OR GRADE BEAMS
SCALE: 3/4"=1'-0"

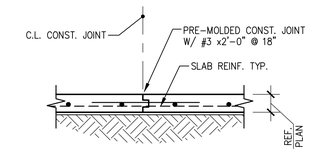

CONSTRUCTION JOINT

NOTE:

1. PROVIDE SAW-CUT WITHIN 24 HOURS OF SLAB CURING TO PREVENT ANY DAMAGING OF SLAB.
2. SEAL ALL SAW-CUT JOINTS PER ARCHITECTS REQUIREMENTS.

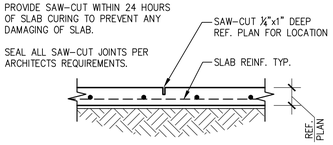

SAWCUT CONTROL JOINT

03 TYP. CONTROL JOINT
SCALE: 3/4"=1'-0"

NOTE: INSTALL CORNER BARS SIM. AT STEMWALL OR SPREAD FOOTING OPTION.

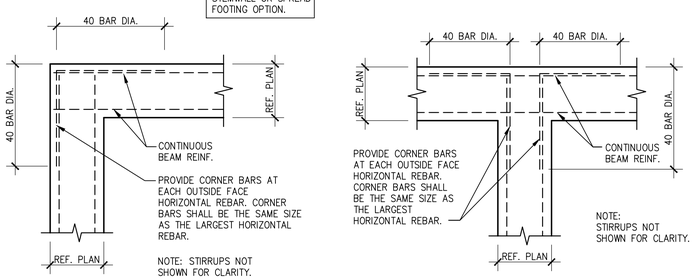

04 TYP. CORNER BAR DETAILS
SCALE: 3/4"=1'-0"

05 TYP. FLOOR DRAIN
SCALE: 3/4"=1'-0"

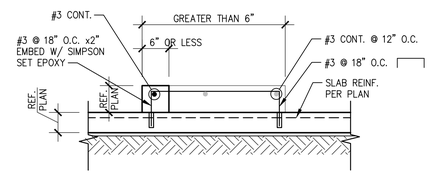

06 TYP. CURB
SCALE: 3/4"=1'-0"

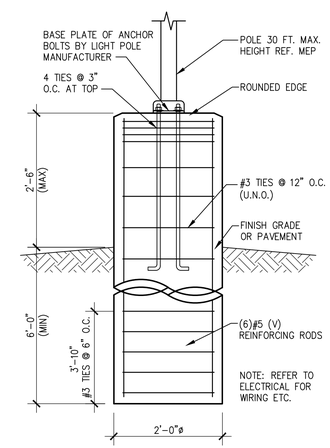

07 TYP. LIGHT POLE BASE
SCALE: 3/4"=1'-0"

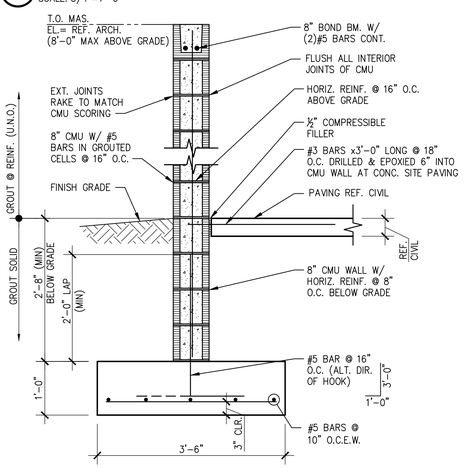

08 TYP. FREE STANDING MASONRY WALL
SCALE: 3/4"=1'-0"

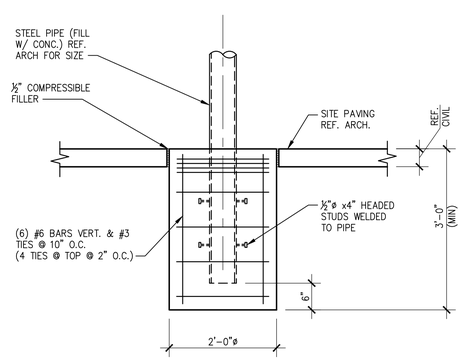

09 TYP. STEEL PIPE BOLLARD
SCALE: 3/4"=1'-0"

EMBEDMENT LENGTHS
CONCRETE 28-DAY COMPRESSIVE STRENGTH – 3,500 PSI

BAR SIZE	STRAIGHT BARS "TOP" BAR	STRAIGHT BARS OTHER BAR	HOOKED BARS
3	1'-10"	1'-5"	0'-9"
4	2'-5"	1'-10"	0'-11"
5	3'-0"	2'-4"	1'-2"
6	3'-7"	2'-9"	1'-5"
7	5'-3"	4'-0"	1'-8"
8	6'-0"	4'-7"	1'-10"
9	6'-8"	5'-2"	2'-1"
10	7'-5"	5'-9"	2'-4"
11	8'-2"	6'-4"	2'-6"

GRADE 60 REINFORCEMENT. MINIMUM LENGTHS SHOWN ABOVE SHALL BE USED UNLESS OTHERWISE NOTED ON THE PLANS. "TOP" BARS ARE HORIZONTAL BARS PLACED SUCH THAT MORE THAN 12 INCHES OF FRESH CONCRETE IS CAST IN THE MEMBER BELOW THE BAR.

LAP SPLICE LENGTHS
CONCRETE 28-DAY COMPRESSIVE STRENGTH – 3,500 PSI

BAR SIZE	SPACING 6" OR GREATER "TOP" BAR	SPACING 6" OR GREATER OTHER BAR	SPACING LESS THAN 6" "TOP" BAR	SPACING LESS THAN 6" OTHER BAR
3	2'-5"	1'-10"	2'-11"	2'-3"
4	3'-2"	2'-5"	3'-10"	2'-11"
5	3'-11"	3'-1"	4'-9"	3'-9"
6	4'-8"	3'-7"	5'-8"	4'-4"
7	6'-10"	5'-3"	8'-3"	6'-4"
8	7'-10"	6'-0"	9'-5"	7'-3"
9	8'-8"	6'-9"	10'-5"	8'-2"
10	9'-8"	7'-6"	11'-8"	9'-0"
11	10'-8"	8'-3"	12'-10"	9'-11"

GRADE 60 REINFORCEMENT. MINIMUM LENGTHS SHOWN ABOVE SHALL BE USED UNLESS OTHERWISE NOTED ON THE PLANS. "TOP" BARS ARE HORIZONTAL BARS PLACED SUCH THAT MORE THAN 12 INCHES OF FRESH CONCRETE IS CAST IN THE MEMBER BELOW THE BAR.

GHA
Architecture / Development
14901 Quorum Drive
Suite 300
Dallas Texas 75254
Ph: (972) 239-8884
Fax: (972) 239-5054

STATE OF MICHIGAN RONALD ROBERTS ENGINEER No. 32994 PROFESSIONAL ENGINEER 12-20-2021

Ronald Roberts Associates, Inc.
Consulting Engineers
2948 N. Stemmons Freeway
Dallas, Texas 75247-6103
Phone: (214) 637-6299
www.rara.net

EST. 1998 SCOOTER'S COFFEE

PROJECT ADDRESS:
1490 WEST ANN ARBOR ROAD
PLYMOUTH, MI 48170

REVISIONS:

TITLE:
FOUNDATION SECTIONS & DETAILS

DATE:
09/16/2021

PROJECT NO.
210536

- ☐ DESIGN DEVELOPMENT
- ☐ PERMIT SUBMITTAL
- ☒ BID PACKAGE
- ☐ CONSTRUCTION ISSUE

SHEET NO.
S2.1

THIS DRAWING AND ITS CONTENTS ARE THE COPYRIGHTED PROPERTY OF FM GROUP INC. USE THEREOF IS LIMITED TO THE SPECIFIC PROJECT AND SITE SET FORTH ABOVE, AND MAY NOT BE OTHERWISE USED OR REPRODUCED, IN WHOLE OR IN PART, WITHOUT THE WRITTEN PERMISSION OF FM GROUP INC.

X:\PROJECTS\21308 Scooters Coffee Plymouth MI\CADD\STRUCT\21308 Issue for Permit 12.20.2021\21308S2.1.dwg, S2.1, 12/20/2021 2:38:37 PM, embers, DWG To PDF.pc3, ARCH full bleed D (24.00 x 36.00 inches), 1:1

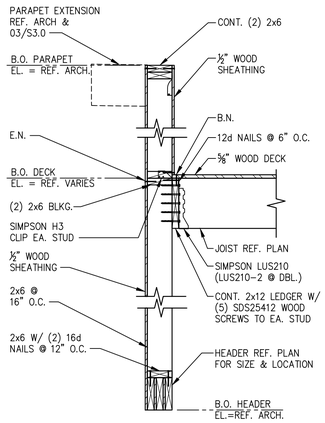

01 SECTION
SCALE: 3/4"=1'-0"

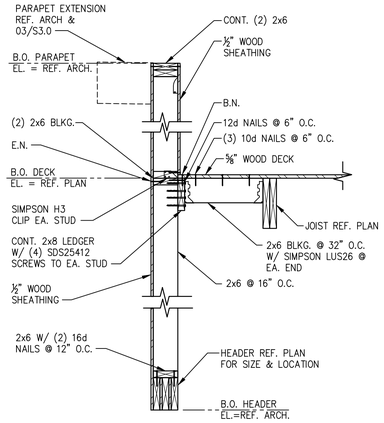

02 SECTION
SCALE: 3/4"=1'-0"

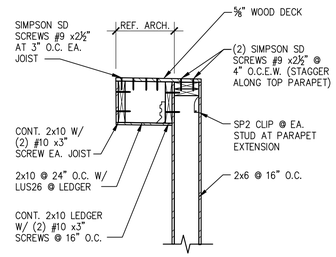

03 TYP. PARAPET EXTENSION
SCALE: 3/4"=1'-0"

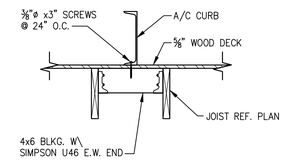

04 SECTION
SCALE: 3/4"=1'-0"

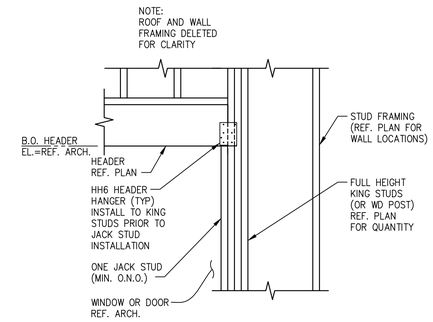

05 TYP. HEADER DETAIL
SCALE: 3/4"=1'-0"

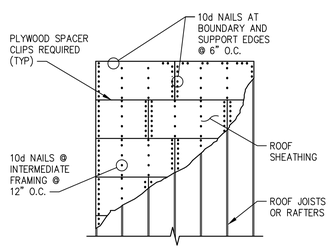

06 ROOF DIAPHRAGM NAILING
SCALE: NONE

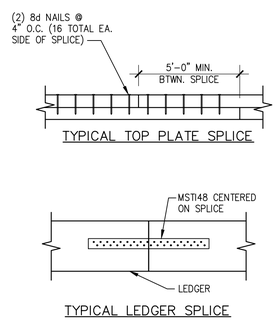

07 TYP. SPLICE DETAILS
SCALE: NONE

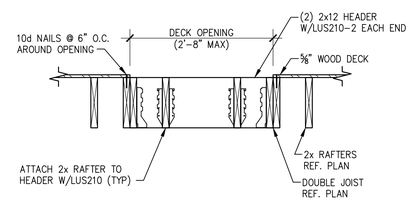

08 SECTION
SCALE: NONE

GHA
Architecture / Development
14901 Quorum Drive
Suite 300
Dallas Texas 75254
Ph: (972) 239-8884
Fax: (972) 239-5054

STATE OF MICHIGAN
RONALD ROBERTS
ENGINEER No. 32994
LICENSED PROFESSIONAL ENGINEER
12-20-2021

Ronald Roberts Associates, Inc.
Consulting Engineers
2948 N. Stemmons Freeway
Dallas, Texas 75247-6103
Phone: (214) 637-6299
www.rara.net

EST. 1998
SCOOTER'S COFFEE

PROJECT ADDRESS:
1490 WEST ANN ARBOR ROAD
PLYMOUTH, MI 48170

REVISIONS:

TITLE:
FRAMING SECTIONS & DETAILS

DATE:
09/16/2021

PROJECT NO.
210536

- ☐ DESIGN DEVELOPMENT
- ☐ PERMIT SUBMITTAL
- ☒ BID PACKAGE
- ☐ CONSTRUCTION ISSUE

SHEET NO.
S3.0

THIS DRAWING AND ITS CONTENTS ARE THE COPYRIGHTED PROPERTY OF FM GROUP INC. USE THEREOF IS LIMITED TO THE SPECIFIC PROJECT AND SITE SET FORTH ABOVE, AND MAY NOT BE OTHERWISE USED OR REPRODUCED, IN WHOLE OR IN PART, WITHOUT THE WRITTEN PERMISSION OF FM GROUP INC.

X:\PROJECTS\21308 Scooters Coffee Plymouth MI\CADD\STRUCT\21308 Issue for Permit 12.20.2021\21308SS3.0.dwg, S3.0, 12/20/2021 2:39:26 PM, ardoetts, DWG To PDF.pc3, ARCH full bleed D (24.00 x 36.00 Inches), 1:1

DIVISION 23 - HVAC SPECIFICATIONS

GENERAL

1. FURNISH AND INSTALL A/C UNITS AS SHOWN ON DRAWINGS. CONTRACTOR SHALL PROVIDE ALL RELATED AND MISCELLANEOUS COMPONENTS AS REQUIRED MAKING SYSTEMS OPERATIONAL AND COMPLETE INCLUDING, BUT NOT LIMITED TO:

   A. VENTILATING, HEATING AND COOLING EQUIPMENT
A. DUCTWORK
B. INSULATION
   D. TEMPERATURE CONTROLS
   E. PIPING
   F. VALVES

2. ALL WORK SHALL BE IN ACCORDANCE WITH ALL PERTINENT CODES AND REGULATIONS, LOCAL AND STATE. CONTRACTOR SHALL BE RESPONSIBLE FOR ALL COSTS OF PERMITTING AND PAYMENT OF ALL UTILITY CHARGES FOR INSTALLATION/CONNECTION/ON-SITE CONSTRUCTION FOR WORK REQUIRED.

3. ALL WORK SHALL BE IN ACCORDANCE WITH ALL PERTINENT CODES AND REGULATIONS, LOCAL AND STATE. CONTRACTOR SHALL BE RESPONSIBLE FOR ALL COSTS OF PERMITTING AND PAYMENT OF ALL UTILITY CHARGES FOR INSTALLATION/CONNECTION/ON-SITE CONSTRUCTION FOR WORK REQUIRED.

4. MECHANICAL WORK SHALL CONFORM THE LATEST CODES.

   ALL LOCAL, CITY, COUNTY, AND STATE CODES
   AABC ASSOCIATE AIR BALANCE COUNCIL
   AGA AMERICAN GAS ASSOCIATION
   AMCA AIR MOVING AND CONTROL ASSOCIATION
   ANSI AMERICAN NATIONAL STANDARDS INSTITUTE
   ASHRAE AMERICAN SOCIETY OF HEATING, REFRIGERATION, AND AIR CONDITIONING ENGINEERS
   ASME AMERICAN SOCIETY OF MECHANICAL ENGINEERS
   ASTM AMERICAN SOCIETY OF TESTING MATERIALS
   AWWA AMERICAN WATER WORKS ASSOCIATION
   NFPA NATIONAL FIRE PROTECTION ASSOCIATION
   OSHA OCCUPATIONAL SAFETY AND HEALTH ADMINISTRATION
   UL UNDERWRITERS' LABORATORIES
   SMACNA SHEET METAL AND AIR CONDITIONING NATIONAL ASSOCIATION

IN CASE OF DIFFERENCES BETWEEN BUILDING CODES, SPECIFICATIONS, STATE LAWS, LOCAL ORDINANCES, INDUSTRY STANDARDS, UTILITY COMPANY REGULATIONS, AND THE CONTRACT DOCUMENTS, THE MOST STRINGENT SHALL GOVERN. SHOULD THE CONTRACTOR PERFORM ANY WORK THAT DOES NOT COMPLY WITH THE REQUIREMENTS OF THE APPLICABLE BUILDING CODES, SPECIFICATIONS, STATE LAWS, LOCAL ORDINANCES, AND INDUSTRY STANDARDS, AND UTILITY COMPANY REGULATIONS, THE CONTRACTOR SHALL BEAR ALL COST ARISING IN CORRECTING THESE DEFICIENCIES.

5. LOCATIONS, QUANTITIES, AND OTHER MEASUREMENTS OF THE BUILDING AND EQUIPMENT ARE OFFERED AS A GUIDE ONLY, WITHOUT GUARANTEE AS TO COMPLETE ACCURACY. THE CONTRACTOR SHALL EXAMINE THE DRAWINGS, EQUIPMENT, AND VERIFY ALL CONDITIONS TO PROVIDE A COMPLETE AND CORRECT OPERATING MECHANICAL SYSTEM.

6. ALL CONTRACTORS SHALL VISIT THE SITE, ASCERTAIN THE CONDITIONS TO BE MET THEREIN INSTALLING THE WORK AND MAKE DUE DILIGENCE FOR THEIR BID. FAILURE TO COMPLY WITH THIS REQUIREMENT SHALL NOT BE CONSIDERED AS JUSTIFICATION FOR THE OMISSION OF WORK, FACULTY WORK OR PAYMENT OF EXTRA COMPENSATION.

7. CONTRACTOR SHALL PROTECT EQUIPMENT ON SITE.

8. CONTRACTOR SHALL LOCATE ALL EQUIPMENT, FIXTURES, PIPING, DUCTWORK, ETC., APPROXIMATELY AS SHOWN ON DRAWINGS, BUT CONFIRM TO ALL STRUCTURAL AND FINISH CONDITIONS OF BUILDING. REFER TO ARCHITECTURAL/STRUCTURAL DRAWINGS AND COORDINATE WITH GENERAL CONTRACTOR PRIOR TO STARTING WORK. CONTRACTOR SHALL PROVIDE ADDITIONAL SUPPORTS, HANGARS, OPENINGS, ETC., AS REQUIRED FOR A COMPLETE INSTALLATION. CONTRACTOR SHALL COORDINATE ALL CLEARANCES, LOCATIONS, AND REQUIREMENTS WITH OTHER TRADES A REQUIRED. ALL EQUIPMENT SHALL BE INSTALLED PER MANUFACTURER'S RECOMMENDATIONS IN ACCORDANCE TO ALL APPLICABLE CODES HAVING JURISDICTION.

9. CONTRACTOR SHALL KEEP THE AREA CLEAN AND FREE OF UNNECESSARY MATERIAL AND DEBRIS. REMOVE ALL TOOLS, SCAFFOLDING, MACHINERY, AND DEBRIS ONCE WORK IS COMPLETE.

10. CONTRACTOR SHALL WORK WITH GENERAL CONTRACTOR TO MEET CONSTRUCTION SCHEDULES.

11. CONTRACTOR SHALL PREPARE AS-BUILT DRAWINGS ONCE PROJECT IS COMPLETE TO INCLUDE BELOW AND ABOVE GRADE WORK, INCLUDING LABELING OF ALL EQUIPMENT, DUCTWORK AND PIPE SIZES, VALVE LOCATIONS, ETC.

12. CONTRACTOR SHALL TEST ALL CONNECTIONS, OPERATION OF ALL EQUIPMENT, ETC.,

13. AFTER ACCEPTANCE BY OWNER, CONTRACTOR SHALL PROVIDE OWNER WITH (2) SETS OF AS-BUILT DRAWINGS.

14. ALL EQUIPMENT SHALL BE LABELED WITH TAG NOS. AS PER EQUIPMENT SCHEDULE. LABELS SHALL BE BY SETON OR APPROVED EQUAL AND SHALL MATCH ANSI Z535. LETTER SIZE SHALL BE A MINIMUM OF 1/2" SIZE.

15. ANY OMISSIONS OR ERRORS FOUND BY THE CONTRACTOR SHALL BE BROUGHT TO THE ATTENTION OF THE ARCHITECT SO THAT AN ADDENDUM MAY BE ISSUED BEFORE BIDDING. ANY OMISSIONS OR ERRORS FOUND AFTER BIDDING WILL BE AT THE EXPENSE OF THE CONTRACTOR.

16. CONTRACTOR WARRANTS TO THE OWNER ALL LABOR AND MATERIALS FURNISHED UNDER THIS CONTRACT FOR ONE (1) YEAR FOLLOWING DATE OF RECEIPT OF SATISFACTORY ACCEPTANCE. CONTRACTOR SHALL WARRANT TO REPAIR ALL DEFECTS IN MATERIAL.

HEATING, AIR CONDITIONING AND VENTILATION

SCOPE OR WORK

1. PROVIDE ALL LABOR, MATERIALS, EQUIPMENT, FEES AND PERMITS, AND PAY ALL COSTS CONNECTED WITH THE INSTALLATION OF COMPLETE HEATING AND AIR CONDITIONS SYSTEMS.

2. IT IS THE INTENT OF THIS SPECIFICATION AND OF THE PLANS TO PROVIDE COMPLETE INSTALLATIONS. IT SHALL BE THE CONTRACTOR'S RESPONSIBILITY TO FURNISH ALL ITEMS OF MATERIAL AND LABOR AND ALL OTHER COST TO COMPLETE THE CONTRACT WITHIN THE INTENT OF THIS SPECIFICATION AND THE PLANS EVEN THOUGH EACH AND EVERY ITEM IS NECESSARY IS NOT SPECIFICALLY MENTIONED OR SHOWN.

3. SUBMIT SHOP DRAWINGS AND/OR MANUFACTURER SUBMITTALS ON ALL MECHANICAL EQUIPMENT, TO INCLUDE, BUT LIMITED TO, AIR CONDITIONING EQUIPMENT, EXHAUST FANS, AIR DEVICES, LOUVERS, VENTILATORS, ETC.

4. WORK INCLUDED BUT NOT INCLUSIVE: THE MECHANICAL HVAC SYSTEM REQUIRED FOR THIS WORK AS INDICATED ON THE DRAWINGS AND INCLUDES, BUT NOT LIMITED TO:

A. PACKAGE ROOFTOP HVAC UNITS, INCLUDING PRE-FAB FACTORY CURBS, STARTERS, SMOKE DETECTORS, ETC., COMPLETE WITH ALL SPECIALTIES.

B. SPLIT-SYSTEM HVAC UNITS, INCLUDING CONDENSING UNITS, DX COILS, AIR HANDLING UNITS, REFRIGERANT PIPING, ETC., COMPLETE WITH ALL SPECIALTIES.

C. EXHAUST FANS, MAKE-UP FANS, INCLUDING PRE-FAB FACTORY CURBS, STARTERS, ETC., COMPLETE WITH ALL SPECIALTIES.

D. INSTALLATION OF ALL OWNER FURNISHED EQUIPMENT.

E. ALL SUPPLY, RETURN, MAKE-UP, VENTILATION, AND EXHAUST DUCTWORK, INCLUDING DISTRIBUTION, DAMPERS, PLENUMS, TURNING VANES, GRILLES, REGISTERS, AND DIFFUSERS.

F. TEMPERATURE CONTROL SYSTEM AND 24V WIRING.

G. THERMAL AND ACOUSTIC INSULATION OFF DUCTS.

H. VIBRATION ISOLATORS AND ADDITIONAL DEVICES.

I. INSPECTION, TESTING, AND BALANCING OF HVAC.

MATERIALS AND WORKMANSHIP

1. AIR CONDITIONING EQUIPMENT:

   AIR CONDITIONING EQUIPMENT SHALL BE OF CAPACITIES, CHARACTERISTICS, SIZE, ETC., AS INDICATED AND SCHEDULED ON THE DRAWINGS OR APPROVED EQUAL.

A. SPLIT SYSTEMS SHALL BE BY CARRIER, TRANE, JCI OR LENNOX. ALL UNITS SHALL OPERATE ON R410A REFRIGERANT.

H. PACKAGED ROOFTOP UNITS SHALL BE BY CARRIER, TRANE, JCI, LENNOX, OR APPROVED EQUAL. GAS FIRED UNITS SHALL HAVE A STAINLESS STEEL HEAT EXCHANGER. ALL UNITS SHALL HAVE CORROSION-PROOF DRAIN PAN, ROOF CURB, MOTORIZED OUTSIDE AIR DAMPER, ECONOMIZER AND SHALL OPERATE ON R410A REFRIGERANT.

2. ROOF MOUNTED FANS SHALL HAVE ROOF CURB, BACKDRAFT DAMPER, INSECT SCREEN. GREASE EXHAUST TYPE FANS SHALL EXTENDED (RAISED) CURB AS PER NFPA. FANS SHALL BE BY GREENHECK, AEROVENT, COOK, ACME, OR APPROVED EQAUL.

3. CEILING MOUNTED FANS SHALL HAVE BACKDRAFT DAMPER, ROOF OR WALL RAIN CAP WITH INSECT SCREEN. FANS SHALL BE BY GREENHECK, AEROVENT, COOK, ACME, OR APPROVED EQUAL.

4. COOLING SECTION SHALL INCLUDE REFRIGERATION COMPRESSOR, COOLING COILS, CONDENSATE COILS, CONDENSER, FAN, REFRIGERANT PIPING SYSTEM, CONTROLS, CHILLED WATER COIL, HOT WATER COIL, ETC.

5. HEATING SECTIONS AND ACCESSORIES SHALL BE AS SCHEDULED OR APPROVED EQUAL.

6. HVAC EQUIPMENT SHALL BE COMPLETE WITH THERMOSTAT OR AS INDICATED ON THE DRAWINGS. (HEAT/COOL/OFF/FAN/ON/AUTO).

EXHAUST AND PLENUMS

2. EXHAUST AND MAKE-UP FANS SHALL BE OF CAPACITIES, CHARACTERISTICS, SIZES,, ETC., AS INDICATED AND SCHEDULED ON THE DRAWINGS.

3. EACH FAN SHALL BE AMCA RATED AND COMPLETE WITH MOTOR, DRIVE, AND ACCESSORIES AS SCHEDULED ON THE DRAWINGS.

DUCTWORK

1. ALL DUCTWORK SHALL BE IN ACCORDANCE WITH THE LATEST EDITION OF THE SMACNA MANUAL FOR FABRICATION, INSTALLATION, AND SUPPORT OF DUCTWORK.

2. NON-GREASE EXHAUST DUCTWORK SHALL BE FABRICATED FROM GALVANIZED SHEET STEEL, MINIMUM GAUGE AS PER SMACNA. GREASE EXHAUST DUCTWORK SHALL BE STAINLESS STEEL WITH LIQUID-TIGHT WELDED JOINTS.

3. GREASE DUCT SHALL HAVE A 2-HR FIRE RATED WRAP UP TO THE EXHAUST FAN AS PER NFPA. ALL SEAMS AND JOINTS SHALL HAVE LIQUID TIGHT WELDS. PROVIDE ACCESS DOORS AT ALL ELBOWS FOR CLEANING PURPOSES, AVOID TRAPS AND SLOPE DUCTWORK TOWARD KITCHEN HOOD. ALL DISHWASHER EXHAUST DUCTWORK SHALL BE 18 GAUGE STAINLESS STEEL.

4. ALL DUCTWORK SHALL BE SUPPORTED ONLY FROM STRUCTURAL BEAMS, JOISTS OR COLUMNS. FLEX CONNECTORS SHALL BE BY DUCTMATE, DURO DYNE OR VENT FABRICS. FLEXIBLE DUCTWORK SHALL BE BY FLEXMASTER, HART & COOLEY, OR MCGILL AIRFLOW. FLEXIBLE DUCTWORK SHALL BE LIMITED TO NO MORE THAN 5' IN LENGTH.

5. PROVIDE TEMPORARY CAPS ON PORTIONS OF DUCTWORK INSTALLED WHICH ARE NOT CONNECTED TO THE SYSTEM TO PREVENT ENTRANCE OF DUST AND DEBRIS UNTIL TIME OF INSTALLATION.

6. AIR DEVICES SHALL BE AS PER SCHEDULE. ADJUST VOLUME DAMPERS AS REQUIRED TO OBTAIN AIR QUANTITIES AS SHOWN ON DRAWINGS. AIR DEVICES SHALL BE BY TITUS, PRICE, POTTORFF, TUTTLE AND BAILEY, OR APPROVED EQUAL. AIR VOLUME DAMPERS INSTALLED ABOVE HARD CEILINGS SHALL BE EQUIPPED WITH REMOTE CONTROLLED DAMPER OPERATOR BY YOUNG, GREENHECK, POTTORFF, OR APPROVED EQUAL.

7. PROTECT NEW DUCT OPENINGS FROM DUST AND DIRT. CLEAN INSIDE AND OUTSIDE OF NEW DUCTWORK IN AREA OR NEW WORK. PROVIDE TEMPORARY FILTER MEDIA FOR ALL RETURN OUTLETS AND OPENING WITHIN NEW CONSTRUCTION LIMIT LINE PER ARCHITECTURAL PLANS.

8. PROVIDE ADJUSTABLE SPLITTER, OPPOSED BLADE, OR BUTTERFLY DAMPERS FOR ALL NEW SUPPLY, RETURN, AND EXHAUST BRANCHES. BALANCING SHALL BE ACHIEVED AT DAMPER NOT DIFFUSER.

9. PROVIDE DOUBLE THICKNESS TURNING VANES AT ALL ABRUPT ELBOWS. RADIUS ELBOWS SHALL HAVE CENTERLINE RADIUS AT LEAST AS GREAT AS THE DUCT WIDTH.

CEILING DIFFUSERS, RETURN GRILLES

1. MARGIN TYPES, COLORS, FINISH AND METHODS OF ATTACHMENT FOR ALL DIFFUSERS, GRILLES, AND REGISTERS SHALL BE COORDINATED WITH ARCHITECTURAL CEILING AND WALL DETAILS AND SPECIFICATIONS.

   1.A. FRAME TYPE SUITABLE FOR MOUNTING IN CEILING OR WALL CONSTRUCTION AS INDICATED ON ARCHITECTURAL PLANS.
   1.B. EXACT LOCATION OF ALL AIR OUTLETS AS PER ARCHITECTURAL PLANS.
   1.C. SUITABLE FOR OPERATION AT +/- 20% OF NOTED CAPACITY FOR CONSTANT VOLUME SYSTEMS.

2. SIZE AS INDICATED ON DRAWINGS EQUAL TO TITUS OR APPROVED EQUAL.

3. REGISTERS AND GRILLES: UNLESS OTHERWISE NOTED, SHALL BE STEEL CONSTRUCTION AS PER MECHANICAL SCHEDULE.

4. DIFFUSERS: UNLESS OTHERWISE NOTED, SHALL BE STEEL CONSTRUCTION, PAINTED WHITE.

INSULATION AND LINING

1. INSULATION SHALL BE INSTALLED IN ACCORDANCE WITH MANUFACTURERS'S RECOMMENDATIONS. UNSIGHTLY WORK SHALL BE JUST CAUSE FOR REJECTION.

2. ALL SUPPLY AND RETURN AIR DUCTWORK SHALL BE INTERNALLY LINED FOR THE FIRST 25 FEET DOWNSTREAM AND UPSTREAM OF FAN SYSTEMS. DUCT LINING SHALL BE GLUED AND PINNED TO DUCT AND TREATED TO PREVENT EROSION. AS A MINIMUM, PROVIDE 1" THICK 1-1/2# DENSITY DUCT LINING.

3. AIR CONDITIONING SUPPLY DUCTWORK, OUTSIDE AIR DUCTWORK, AND RETURN AIR DUCTWORK ABOVE THE CEILING AND IN UNCONDITIONED SPACES, WHERE NOT LINED, SHALL BE INSULATED WITH A MIN. 2" THICK, 3/4# DENSITY FIBERGLASS WRAP WITH FIRE RETARDANT VAPOR-BARRIER COVERING TO PROVIDE A MAXIMUM INSTALL CONDUCTANCE OF 0.3. OVERLAP ALL SEAMS, JOINTS, AND SECURE WITH MANUFACTURER APPROVED ADHESIVE TO PROVIDE CONTINUITY OF VAPOR BARRIER. LINED DUCTWORK NEED NOT BE INSULATED.

4. INSULATE REFRIGERANT SUCTION LINE, COOLING COIL, CONDENSATE DRAIN AND CONDENSATE PUMP DISCHARGE PIPING WITH 1/2" FLEXIBLE ELASTOMERIC INSULATION WITH VAPOR BARRIER JACKET.

5. WHERE PENETRATING A FIRE RATED CONSTRUCTION. PROVIDE SUITABLE FIRE STOPPING INSULATION.

6. CONDENSATE PIPING SHALL BE GALVANIZED STEEL, COPPER OR PVC, 1" MINIMUM IN SIZE. PIPING INDOORS SHALL BE INSULATED WITH 3/4" THICK ARMAFLEX. PIPING SHALL BE SUPPORTED BY STRUCTURE OR FLOOR ONLY. SLOPE DRAIN AT A MINIMUM OF 1/8"/FT. TO AN INDIRECT WASTE WITH MINIMAL AIR GAP OF 2".

TEST AND BALANCE

4. MECHANICAL CONTRACTOR SHALL BE RESPONSIBLE FOR BALANCING ENTIRE HVAC SYSTEM (DUCTS, DIFFUSERS, RETURN AIR, F.A. DAMPERS, FAN RPMS, EXHAUST AND SUPPLY FANS) PER AIR BALANCE SCHEDULE FOUND WITHIN THESE DOCUMENTS. WHEN PROPERLY BALANCED, FIX AND MARK DAMPER SETTINGS ON EACH PIECE OF EQUIPMENT. NOTIFY OWNER THAT IT WILL BE THEIR RESPONSIBILITY TO SET MANUAL HVAC FAN SWITCH ON THERMOSTAT TO "ON" POSITION WHEN HOOD EXHAUST FANS ARE TURNED ON.

5. AABC OR NEBB CERTIFIED AIR BALANCE SPECIALTY CONTRACTOR IS RECOMMENDED TO PERFORM THE BALANCE THE AIR AND WATER SYSTEMS AS REQUIRED AND CREATE A REPORT FOR ENGINEER'S REVIEW.

6. AFTER COMPLETION OF ALL REQUIRED WORK, THE CONTRACTOR SHALL OPERATE AND MAKE ANY REQUIRED ADJUSTMENTS TO EQUIPMENT. DUCTWORK, ETC., AS MAY BE NECESSARY TO PUT THE SYSTEMS IN PROPER OPERATING CONDITION. AFTER ALL ADJUSTMENTS HAVE BEEN COMPLETED, THE CONTRACTOR SHALL BALANCE EACH DEVICE TO WITHIN +/- 10% OF VALUE ON DRAWINGS.

PIPING

1. PIPING MATERIALS:

   SCHEDULE 40, STANDARD WEIGHT, SEAMLESS BLACK STEEL - ASTM A53 OR ASTM A106
   SYSTEM TYPE: CHILLED WATER 2-1/2" UP TO 10"; HEATING WATER 2-1/2" UP TO 10"; CONDENSER WATER UP TO 10"; 125 PSI AND LESS STEAM SUPPLY UP TO 6"; NATURAL GAS PIPING; PUMPED CONDENSATE, AND REFRIGERANT RELIEF VENT.

   SCHEDULE 80 SEAMLESS STEEL - ASTM A53 OR ASTM A106

   SYSTEM TYPE: STEAM CONDENSATE RETURN; PUMPED STEAM CONDENSATE RETURN UP TO 6".

   SCHEDULE 40, GALVANIZED - ASTM A104 OR A120

   SYSTEM TYPE: COLD CONDENSATE DRAIN INDOORS.

   TYPE L ACR COPPER

   SYSTEM TYPE: REFRIGERANT PIPING UP TO 2".

   TYPE L, HARD DRAWN, SEAMLESS, WROUGHT COPPER - ASTM B88

   SYSTEM TYPE: CHILLED AND HEATING WATER TO 2" AND COLD OR PUMPED CONDENSATE DRAIN

   TYPE M, HARD DRAWN, SEAMLESS, WROUGHT COPPER - ASTM B88

   SYSTEM TYPE: NON-PRESSURIZED COLD CONDENSATE DRAIN

   PVC, DRAIN WASTE VENT

   SYSTEM TYPE: UNDERGROUND SANITARY SEWER.

   CAST IRON, NO HUB

   SYSTEM TYPE: ABOVE GROUND, WASTE VENT PIPING.

2. FITTINGS AND JOINTS:

   STEEL:
   ALL SIZES AND SERVICE: MARK IN ACCORDANCE WITH MSS-SP-25 UNION UP TO 2-1/2". USE SAME MATERIAL TYPE AS FITTING, WHERE METAL; SCREWED BRASS SEAT. WHERE PLASTIC PIPE, USE SAME MATERIAL AS PIPE.

   -BRANCH CONNECTIONS FROM MAINS AND HEADERS, 2.-1/2" AND LARGER: WELDED TEES OR WELDED OUTLETS (BONNEY FORGE WELDOLETS OR THREADOLETS). USE FORGED OUTLETS ONLY IF BRANCH LINE IS AT LEAST ONE PIPE SIZE SMALLER THAN MAIN OR HEADER.

   -UP TO 2-1/2": HOT CONDENSATE WATER - CLASS 150, MALLEABLE IRON, SCREWED, ASME B16.3; STEAM 125 PSI AND LESS - CLASS 150 A53 MALLEABLE IRON, SCREWED, ASME B16.3; STEAM CONDENSATE (PUMPED OR GRAVITY) - CLASS 150 MALLEABLE IRON, SCREWED ASME B16.3 2-1/2" AND LARGER: ALL SERVICES - CLASS 150, WROUGHT STEEL, BUTT-WELDED, ASME B16.9

   GALVANIZED STEEL:
   SAME AS FOR STEEL EXCEPT GALVANIZED COATING

   COPPER:
   SIZES AND SERVICE NOTED IN PIPING MATERIALS ABOVE:

   SWEAT TYPE, WROUGHT COPPER, ASTM B62 WITH DIMENSIONS CONFORMING TO ANSI B16.22 AND SWEEP PATTERNS FOR COPPER TUBING.

   PROVIDE DIELECTRIC CONNECTIONS AT JUNCTIONS OF COPPER PIPE/EQUIPMENT CONNECTIONS AND STEEL PIPING SYSTEMS.

   PROVIDER COPPER SOLDER JOINT TO PLATED FEMALE IRON PIPE.

   UNIONS - BRASS GROUND JOINT, 250-LB WORKING PRESSURE

   NIPPLES - BRASS.

COMMISSIONING

A. PER THE REQUIREMENTS OF THE 2018 IECC SECTION C408.2, THE OWNER OR CONTRACTOR SHALL HAVE A COMMISSIONING PLAN DEVELOPED BY A REGISTERED DESIGN PROFESSIONAL OR APPROVED AGENCY RESPONSIBLE FOR THE TESTING AND/OR CALIBRATION OF THE BUILDING SYSTEMS DEFINED IN THIS SECTION.

B. PRIOR TO FINAL INSPECTION, THE REGISTERED DESIGN PROFESSIONAL SHALL PROVIDE EVIDENCE THAT THE MECHANICAL SYSTEMS HAVE BEEN TESTED TO ENSURE THAT ALL EQUIPMENT INSTALLATION, SEQUENCE OF OPERATIONS AND ARE IN PROPER WORKING CONDITION IN ACCORDANCE WITH THE CONSTRUCTION DOCUMENTS AND THE MANUFACTURER'S INSTRUCTIONS. FUNCTIONAL TESTING SHALL BE IN ACCORDANCE WITH SECTIONS C408.2.3 THROUGH C408.2.5 FOR THE APPLICABLE CONTROL TYPE.

C. A FULL REPORT OF TEST RESULTS SHALL BE PROVIDED TO THE OWNER ALONG WITH MANUALS AND AS-BUILT CONSTRUCTION DOCUMENTS OF THESE SYSTEMS.

THIS DRAWING AND ITS CONTENTS ARE THE COPYRIGHTED PROPERTY OF GHA ARCHITECTS USE THEREOF IS LIMITED TO THE SPECIFIC PROJECT AND SITE SET FORTH ABOVE, AND MAY NOT BE OTHERWISE USED OR REPRODUCED, IN WHOLE OR IN PART, WITHOUT THE WRITTEN PERMISSION OF GHA ARCHITECTS, THE ARCHITECT. THIS DRAWING IS TO BE RETURNED UPON REQUEST.

GHA
Architecture / Development
14901 Quorum Drive
Suite 300
Dallas Texas 75254
Ph: (972) 239-8884
Fax: (972) 239-5054

STATE OF MICHIGAN
GRANT REID CLAUSSEN
License No. 6201309682
LICENSED PROFESSIONAL ENGINEER

12-17-2021

Engineering Firm : F-21834
GHC Engineers, LLC
14901 Quorum Dr, Ste 300
Dallas, Texas 75254
Office: 972-239-8884
gclaussen@ghcengineers.com
Project # G21-0959.001

EST. 1998 SCOOTER'S COFFEE

PROJECT ADDRESS:
1490 WEST ANN ARBOR ROAD
PLYMOUTH, MI 48170

REVISIONS:

TITLE:

MECHANICAL SPECIFICATIONS

DATE:
09/16/2021

PROJECT NO.
210536

- [ ] DESIGN DEVELOPMENT
- [x] PERMIT SUBMITTAL
- [ ] BID PACKAGE
- [ ] CONSTRUCTION ISSUE

SHEET NO.

M1.01

HVAC GENERAL NOTES

INTENT OF DRAWINGS

1. THE DRAWINGS ARE DIAGRAMMATIC AND SHOW THE GENERAL LOCATION OF DUCTWORK, PIPING AND EQUIPMENT. THE DRAWINGS DO NOT SHOW ALL NECESSARY OFFSETS, TRANSITIONS, AND ADJUSTMENTS NECESSITATED BY COORDINATION WITH OTHER TRADES. THE CONTRACTOR SHALL COORDINATE ALL WORK, TRANSITIONS, AND ADJUSTMENTS WITH THE CONDITIONS OF THE JOB SITE AND ALL OTHER TRADES.

2. THESE DRAWINGS DO NOT INDICATE OR SHOW ALL EXISTING PIPING, EQUIPMENT, DUCTWORK, ETC. THESE DRAWINGS ARE NOT A SUBSTITUTE FOR FIELD VERIFICATION.

3. HVAC WORK SHALL INCLUDE FURNISHING (EXCEPT WHERE NOTED), INSTALLING AND TESTING ALL HVAC SYSTEMS FOR A COMPLETE,, FULLY OPERATIONAL, AND CODE COMPLIANT INSTALLATION INCLUDING, BUT NOT LIMITED TO:

3.1. MANUFACTURERS' STANDARD ROOF CURBS OR AS SPECIFIED.

3.2. ROOF OPENINGS,

3.3. COPPER CONDENSATE DRAINS WITH 3" TRAP DEPTH, UNLESS NOTED OTHERWISE AND PROPER SLOPE, GAS PIPING SUPPORTED EVERY 10 FEET AND OTHER PIPING AND FITTINGS.

3.4. DUCTWORK, TURNING VANES, SPLITTERS, DAMPERS, SPIN-INS, ETC. IN ACCORDANCE WITH SMACNA STANDARDS FOR LOCATION, THICKNESS, AND CONSTRUCTION.

3.5. DIFFUSERS, SUPPLY AND RETURN GRILLES,

3.6. LINE SETS, AUXILIARY DRAIN PANS AND PIPING, AND FRESH AIR INTAKE AIR HANDLER(S),

3.7. CONTROLS, SENSORS, AND LOW VOLTAGE WIRING (I.E. 8-STRAND, 18 AWG. NON-SHIELDED CABLE),

3.8. SHIMS AND MISCELLANEOUS STEEL FOR LEVEL INSTALLATION AND PROPER CONDENSATE DRAINAGE.

3.9. SMOKE DETECTORS IN RETURN AIR DUCT OR SUPPLY DUCTS AS REQUIRED BY LOCAL CODE OFFICIALS.

3.10. WEATHER-PROOF ROOF AND WALL PENETRATIONS FOR COPPER PIPING, MAKE-UP AIR, GAS PIPNG, PADS.

COORDINATION WITH OTHER TRADES

4. EXAMINE AND REVIEW THE CONTRACT DOCUMENTS OF ALL DIVISIONS IN ORDER TO COORDINATE THE INSTALLATION OF WORK.

5. USE FIELD MEASUREMENTS TO VERIFY DIMENSIONS WHERE AREAS ARE CONGESTED, AND EXACT LOCATION IS CRITICAL TO ASSURE PROPER INSTALLATION.

6. COORDINATION SHALL INCLUDE, BUT SHALL NOT BE LIMITED TO, VERIFYING THE LOCATION AND SIZE OF OPENINGS IN FLOORS, WALLS, PARTITIONS, CEILINGS, AND ROOFS WITH THE INSTALLING TRADES; ALLOCATION OF SPACE WITH OTHER TRADES INSTALLING WORK IN CHASES, SHAFTS, CEILING
INTERSTITIAL SPACES, AND EQUIPMENT SPACES, AND THE PHASING OF INSTALLATION WORK WITH THAT OF OTHER TRADES.

6. COORDINATE LOCATION OF AIR DEVICES WITH ARCHITECTURAL REFLECTED CEILING PLAN.

7. ALL NEW ROOF PENETRATIONS SHALL BE PER THE ARCHITECTURAL DRAWINGS AND SPECIFICATIONS.

8. ALL NEW EQUIPMENT SUPPORTS SHALL BE INSTALLED PER THE ARCHITECTURAL DRAWINGS AND SPECIFICATIONS.

9. ALL ROOF MOUNTED EQUIPMENT LOCATIONS SHALL BE VERIFIED AND APPROVED BY A REGISTERED STRUCTURAL ENGINEER LICENSED IN THE STATE WHERE WORK IS BEING.

10. THE CONTRACTOR SHALL COORDINATE ALL THE FLOOR AND PARTITION PENETRATIONS WITH THE FIELD CONDITIONS AND STRUCTURAL DESIGN BEFORE DRILLING OR CORE-BORING.

11. THE CONTRACTOR SHALL SEAL ALL PENETRATIONS WITH A CODE APPROVED FIRE RATED MATERIAL AS REQUIRED TO MAINTAIN THE FIRE SEPARATION BETWEEN FLOORS/ROOF REQUIRED BY THE ARCHITECTURAL DRAWINGS. REFER TO THE ARCHITECTURAL DRAWINGS FOR ADDITIONAL INFORMATION AND FIRE BARRIER LOCATIONS.

12. ALL ROOF MOUNTED EQUIPMENT LOCATIONS SHALL BE VERIFIED AND APPROVED BY A REGISTERED STRUCTURAL ENGINEER.

13. ALL EQUIPMENT SHALL BE SUPPORTED FROM STRUCTURAL MEMBERS. NO WEIGHT CAN BE PLACED ON THE ROOFING MATERIALS OR INSULATION.

WORKMANSHIP

14. ALL WORK AND INSTALLATION SHALL BE DONE BY A LICENSED CONTRACTOR WITH EXPERIENCE IN THE WORK REQUIRED FOR THIS PROJECT.

15. CONTRACTOR SHALL BRING TO THE ATTENTION OF THE ENGINEER ANY CODE ISSUES NOT ALREADY ADDRESSED.

16. INSTALL ALL WORK IN A WORKMANLIKE MANNER THAT PROVIDES A FIRST CLASS COMPLETED INSTALLATION. REMOVE, CORRECT AND REPLACE ANY WORK DEEMED UNACCEPTABLE AT THE DISCRETION OF THE ARCHITECT/ENGINEER.

17. ALL WORK SHALL BE DONE IN ACCORDANCE WITH ALL APPLICABLE CODES. NOTHING SHOWN ON THE PLANS IS INTENDED TO INDICATE THAT THE INSTALLATIONS OR CONNECTIONS OF ANY ITEM OR DEVICE SHOULD BE DONE CONTRARY TO MANUFACTURERS INSTRUCTIONS AND ALL APPLICABLE CODES AND REGULATIONS. THE CONTRACTOR IS RESPONSIBLE TO INSURE THAT THE INSTALLATIONS AND CONNECTIONS OF ALL ITEMS AND DEVICES CONFORMS TO MANUFACTURERS INSTRUCTIONS AND TO ALL APPLICABLE CODES AND REGULATIONS.

18. UPON COMPLETION OF INSTALLATION. THE CONTRACTOR SHALL FURNISH TO THE ARCHITECT A SET OF DRAWINGS, MARKED TO SCALE, INDICATING THE SIZE AND LOCATION OF PIPING, AND NOTING ALL MAJOR CHANGES MADE DURING CONSTRUCTION.

19. THE CONTRACTOR SHALL TEST ALL NEW PIPING AND NEW EQUIPMENT FOR PROPER OPERATION AND SHALL MAKE ALL NECESSARY REPAIRS AS REQUIRED TO PROVIDE A COMPLETE WORKING SYSTEM.

20. THE CONTRACTOR SHALL BE RESPONSIBLE FOR RESTORING ALL THE AREAS AFFECTED BY THE WORK REQUIRED IN THESE DRAWINGS TO THEIR ORIGINAL CONDITION AS REQUIRED BY THE OWNER/ARCHITECT.

21. THE CONTRACTOR SHALL BE RESPONSIBLE FOR REMOVING ALL DEBRIS FROM THE JOB-SITE AS REQUIRED BY THIS CONTRACT IN COMPLIANCE WITH ALL LOCAL, STATE AND FEDERAL REGULATIONS.

22. THE CONTRACTOR SHALL BE RESPONSIBLE FOR SCHEDULING, PERMITTING, AND CONDUCTING ALL THE INSPECTIONS AND TESTS REQUIRED BY THE LOCAL AUTHORITY HAVING JURISDICTION. CONTRACTOR SHALL PROVIDE 48 HOURS NOTICE OF COMMISSIONING INSPECTION TO THE ENGINEER.

EQUIPMENT

24. INSTALL ALL EQUIPMENT IN ACCORDANCE WITH THE MANUFACTURER'S PRINTED INSTALLATION INSTRUCTIONS, THE SPECIFICATIONS, AND APPROVED SHOP DRAWINGS.

25. PROVIDE SERVICE AND OPERATING CLEARANCES AROUND ALL SIDES OF EACH PIECE OF EQUIPMENT IN ACCORDANCE WITH THE MANUFACTURER'S PRINTED REQUIREMENTS AND RECOMMENDATIONS.

26. EQUIPMENT WITH ROTATING APPARATUS SHALL HAVE FLEXIBLE DUCTWORK AT ALL CONNECTIONS. DOES NOT INCLUDE TERMINAL BOXES.

27. THE CONTRACTOR SHALL FURNISH AND INSTALL ALL THE NECESSARY PIPING, FITTINGS, VALVES, HARDWARE, SUPPORTS AND ACCESSORIES REQUIRED FOR THE PROPER INSTALLATION AND OPERATION OF THE NEW MECHANICAL SYSTEM(S).

DUCTWORK

28. DUCTWORK SHOP DRAWINGS SHALL BE PROVIDED TO, REVIEWED BY, AND APPROVED BY THE ENGINEER PRIOR TO ANY DUCTWORK FABRICATION AND OR INSTALLATION. DUCTWORK SHOP DRAWINGS SHALL INDICATE THE ACTUAL SIZE OF EACH SECTION OF DUCT AND ALL REQUIRED FITTINGS AND TRANSITIONS.

29. DUCTWORK SHALL BE GALVANIZED SHEETMETAL CONSTRUCTION AND INSTALLED IN ACCORDANCE WITH THE LATEST EDITIONS OF LOCAL BUILDING CODES AND SMACNA.

30. DUCTWORK SIZES INDICATED ON CONTRACT DOCUMENTS ARE AIRSIZE ONLY AND DO NOT INCLUDE AN ALLOWANCE FOR LINER.

31. FABRICATE AND INSTALL ALL DUCTWORK IN ACCORDANCE WITH THE SPECIFICATIONS, THE PLANS AND DETAILS, AND THE DUCT CONSTRUCTION AND INSULATION SCHEDULE.

32. SEAL ALL DUCTWORK JOINTS AND SEAMS WITH THE APPROVED MASTICS OR TAPES LABELED IN ACCORDANCE WITH UL181A. FOR FLEXIBLE DUCT ALL CONNECTIONS SHALL USE APPROVED MASTICS OR TAPES LABELED IN ACCORDANCE WITH 181B.

33. CENTER ALL DIFFUSERS WITHIN SQUARE CEILING TILES, AND CENTER IN EITHER THE RIGHT OR LEFT HALF OF 24"x48" RECTANGULAR CEILING TILES.

34. PROVIDE DUCT RUNOUTS TO REGISTERS, GRILLES & DIFFUSERS SAME SIZE AS THE DEVICE NECK UNLESS NOTED OTHERWISE ON THE DRAWINGS. PROVIDE A MANUAL BALANCE DAMPER AT EACH BRANCH DUCT TAP FROM MAIN DUCT.

35. PROVIDE ALL SQUARE, 90° DUCT ELBOWS WITH SINGLE THICKNESS TURNING VANES SPACED 1.5" APART WHETHER SHOWN ON PLANS OR NOT UNLESSSPECIFICALLY NOTED OTHERWISE.

36. PAINT ALL DUCT VOLUME DAMPER HANDLES FLORESCENT ORANGE UNLESS EXPOSED IN FINISHED AREAS.

37. PROVIDE FLEXIBLE DUCT CONNECTORS AT ALL DUCTWORK CONNECTIONS TO HVAC EQUIPMENT. FLEXIBLE DUCTWORK SHALL NOT EXCEED 5'-0" IN LENGTH. BENDS SHALL BE MINIMIZED AND WHERE NEEDED BE A FULL RADIUS BEND. SUPPORT BANDS SHALL BE INSTALLED SO AS TO NOT CRIMP THE FLEX DUCT. FLEXIBLE DUCTWORK SHALL BE UL 181 LISTED AS A CLASS 1 AIR DUCT.

38. FIRE/SMOKE DAMPERS SHALL BE UL LISTED, CLASS I LEAKAGE AT ALL FIRE WALL PENETRATIONS. REFER TO ARCHITECTURAL FOR FIRE WALL RATING. REFER TO MECHANICAL FLOOR PLANS FOR DAMPER SIZING.

39. PROVIDE SMOKE DETECTORS IN THE RETURN DUCTS AT EACH AIR UNIT. PROVIDE SMOKE DETECTORS IN THE SUPPLY DUCTS AT AIR UNITS WITH SUPPLY OVER 2000 CFM. INTERLOCK FANS WITH SMOKE DETECTORS TO SHUT OFF UNIT IF SMOKE DETECTORS ARE ACTIVATED. PROVIDE ADDITIONAL DUCT SMOKE DETECTORS REQUIRED BY LOCAL CODE AUTHORITIES.

DUCT SEALANT

40. SEAL ALL LONGITUDINAL AND TRANSVERSE JOINTS WITH A NON-HARDENING, NON-MIGRATING MASTIC OR LIQUID ELASTIC SEALANT, WITH VOC CONTENT NO GREATER THAN 250 G/L AND OF A TYPE RECOMMENDED BY THE MANUFACTURER FOR SEALING JOINTS AND SEAMS IN SHEET METAL DUCTWORK. COVER ALL FIELD JOINTS, JOINTS AROUND SPIN-IN FITTINGS, AND FASTENING SCREWS WITH MASTIC.

GRILLES, REGISTERS, AND DIFFUSERS

41. GRILLES, REGISTERS, DIFFUSERS SHALL BE AS SPECIFIED AND SHALL BE MECHANICAL CONTRACTOR SUPPLIED, UNLESS OTHERWISE NOTED. DIFFUSERS SHALL BE INSTALLED AS INDICATED ON THE DRAWINGS AND SCHEDULES. THE CONTRACTOR SHALL PROVIDE ALL MISCELLANEOUS ITEMS NECESSARY FOR A COMPLETE AND PROPER INSTALLATION IN THE TYPE OF CEILING AND WALLS USED.

PIPING

42. UNLESS OTHERWISE NOTED, THE PIPE DIAMETERS INDICATED ON THE DRAWING REFER TO NOMINAL CARBON STEEL PIPE SIZES. FOR HYDRONIC SERVICE,WHERE THE USE OF COPPER TUBING IS PERMITTED BY THE SPECIFICATIONS,THE DIAMETER INDICATED ON THE DRAWING REFERS TO THE NOMINAL TUBING SIZE FOR COPPER TUBING USED IN REFRIGERANT SERVICE, THE DIAMETER INDICATED ON THE DRAWINGS REFERS TO THE ACTUAL O.D. OF THE TUBING.

43. MINIMUM CONDENSATE DRAIN PIPE SIZE SHALL BE 3/4". INSULATE ALL INTERIOR CONDENSATE DRAIN PIPING.

44. CONDENSATE DRAIN PIPING SHALL BE TYPE 'L' OR 'K' HARD-DRAWN COPPER WITH WROUGHT COPPER FITTINGS. PROVIDE OWENS CORNING FIBERGLASS ASJ INSULATION, OR APPROVED EQUAL. MINIMUM CONDENSATE DRAIN INSULATION THICKNESS SHALL BE 1".

WALL MOUNTED THERMOSTATS

45. WALL MOUNTED THERMOSTAT SHALL BE LOCATED APPROX. 48" AFF. THERMOSTATS LOCATED ON EXTERIOR WALLS SHALL BE INSTALLED WITH THERMAL INSULATION BACKING.

TEST AND BALANCING

46. PROVIDE TEST, ADJUST, AND BALANCING SERVICES PREFORMED BY AN INDEPENDENT AIR BALANCE AGENCY CERTIFIED BY THE AABC.

51. TESTING, ADJUSTING, AND BALANCING OF THE HVAC SYSTEMS:
1. ADJUST FAN DRIVES TO ACHIEVE AIR QUANTITIES INDICATED ON PLANS.
2. ADJUST AIR DEVICES AT MANUAL BALANCING DAMPERS TO ACHIEVE AIR QUANTITIES ON PLANS.
3. ADJUST CONTROL ELEMENT SETTINGS AND VERIFY CONTROL SYSTEM OPERATION.
4. PROVIDE TWO COPIES OF TAB WITH THE FOLLOWING:
A. FLOWS BY AIR DEVICE.
B. FLOWS BY EQUIPMENT.

52. PROVIDE COPIES OF THE MANUFACTURER'S OPERATION AND MAINTENANCE MANUALS AT THE COMPLETION OF THE PROJECT.

EQUIPMENT SUBMITTALS

53. THE CONTRACTOR SHALL SUBMIT MANUFACTURER'S SPECIFICATIONS AND CUT-SHEETS FOR ALL THE EQUIPMENT, FITTINGS AND COMPONENTS AS REQUIRED FOR FINAL APPROVAL BY THE ENGINEER BEFORE PURCHASING OR INSTALLING THEM. REFER TO SPECIFICATIONS FOR MORE COMPLETE INFORMATION ABOUT THE EQUIPMENT SCHEDULED.

REMOVAL OF EXISTING AND ITEMS TO REMAIN

53. DETACH ITEMS FROM EXISTING CONSTRUCTION AND LEGALLY DISPOSE OF THEM OFF-SITE, UNLESS INDICATED TO BE REMOVED AND SALVAGED OR REMOVED AND REINSTALLED.

54. REMOVE AND SALVAGE: DETACH ITEMS FROM EXISTING CONSTRUCTION AND DELIVER THEM TO OWNER OR OWNER'S REPRESENTATIVE READY FOR REUSE.

55. REMOVE AND REINSTALL: DETACH ITEMS FROM EXISTING CONSTRUCTION, PREPARE THEM FOR REUSE, AND REINSTALL THEM WHERE INDICATED.

56. EXISTING TO REMAIN: EXISTING ITEMS OF CONSTRUCTION THAT ARE NOT TO BE REMOVED AND THAT ARE NOT OTHERWISE INDICATED TO BE REMOVED, REMOVED AND SALVAGED, OR REMOVED AND REINSTALLED.

ACCESS DOORS

57. PROVIDE MILCOR OR APPROVED EQUAL AS REQUIRED FOR ACCESS TO ALL VALVES, FILTERS, CONTROLS, DAMPERS OR OTHER DEVICES REQUIRING ATTENTION. DOORS SHALL MATCH WALL OR CEILING RATING. ARCHITECT MUST APPROVE LOCATION AND APPEARANCE OF ALL ACCESS DOORS. ACCESS PANELS FOR FIRE OR SMOKE DAMPERS SHALL BE OPENABLE WITHOUT THE USE OF TOOLS.

ACCESS AND SERVICE SPACE

58. CLEARANCE AROUND ALL HVAC EQUIPMENT SHALL CONFORM TO MANUFACTURER'S MINIMUM RECOMMENDED SPACE FOR MAINTENANCE AND/OR AR FLOW AND SHALL BE SUFFICIENT TO ALLOW DISABLING THE FUNCTION OF THE FIRE RESISTANCE RATED ASSEMBLIES.

OVERFLOW DRAIN PANS

59. PROVIDE UNDER ALL FURRED IN UNITS. PANS TO BE MINIMUM 24 GAUGE GALVANIZED SHEET STEEL; MINIMUM 1-1/2" DEEP AND NOT LESS THAN 3" LARGER THAN UNIT OR COIL DIMENSIONS. PROVIDE SEPARATE 3/4" DRAIN FROM PAN TO CONSPICUOUS LOCATION. PROVIDE ESCUTCHEON PLATES AT CEILING PENETRATIONS. WHEN ALLOWED BY LOCAL AUTHORITY: CONTRACTOR MAY PROVIDE FLOAT SWITCH IN OVERFLOW PAN INSTEAD OF DISCHARGE PIPING. FLOAT SWITCH SHALL SHUT UNIT OFF IF WATER IS DETECTED. PANS EQUIPPED WITH FLOAT SWITCH SHALL HAVE A SCREW CAP NIPPLE ON BOTTOM OF SIDE OF PAN TO ALLOW WATER TO BE DRAINED FROM PAN.

ALL HVAC UNITS SHALL BE AUTOMATICALLY SHUT DOWN BY SMOKE DETECTORS (PROVIDED AS PART OF THE FIRE ALARM SYSTEM, UNLESS SPECIFICALLY NOTED IN THE MECHANICAL DOCUMENTS) IN RETURN AIR SYSTEMS OF 2000 CFM OR GREATER (AND IN MULTIPLE SYSTEMS SERVING COMMON AREAS AND HAVING TOTAL CAPACITIES MORE THAN 2000 CFM). SMOKE DETECTORS SHALL BE UPSTREAM ON ANY FILTERS, EXHAUST CONNECTIONS OR OUTSIDE AIR CONNECTIONS.

ABBREVIATIONS

A/C	AIR CONDITIONING UNIT	LL	LANDLORD
A/E	ARCHITECT/ENGINEER	LB	POUNDS
AFF	ABOVE FINISHED FLOOR	LRA	LOCKED ROTOR AMPS
AHU	AIR HANDLING UNIT	MAX	MAXIMUM
APPROX.	APPROXIMATE	MBH	1000 BRITISH THERMAL UNIT PER HOUR
BAS	BUILDING AUTOMATION SYSTEM	MCA	MINIMUM CIRCUIT AMPACITY
BHP	BRAKE HORSE POWER	MD	MOTORIZED DAMPER
BTU	BRITISH THERMAL UNIT PER HOUR	MFR	MANUFACTURER
CC	COOLING COIL	MIN	MINIMUM
CD	CONDENSATE DRAIN	MOCP	MAXIMUM OVER CURRENT PROTECTION
CFH	CUBIC FEET PER HOUR	N/A	NOT APPLICABLE
CFM	CUBIC FEET PER MINUTE	NC	NORMALLY CLOSED
CLG	CEILING	NIC	NOT IN CONTRACT
CU	CONDENSING UNIT	NO	NORMALLY OPEN
D	EQUIPMENT DRAIN	NTS	NOT TO SCALE
DEG	DEGREES	O/A	OUTSIDE AIR
DB	DRY-BULB	OBD	OPPOSED BLADE DAMPER
DN	DOWN	OC	ON CENTER
(E)	EXISTING	PH	PHASE
EAT	ENTERING AIR TEMPERATURE	PROVIDE	FURNISH AND INSTALL
E/A	EXHAUST AIR	PRV	PRESSURE REDUCING VALVE
EDH	ELECTRIC DUCT HEATER	PSI	POUNDS PER SQUARE INCH
EF	EXHAUST FAN	R/A	RETURN AIR
ESP	EXTERNAL STATIC PRESSURE	RE:	REFER TO, REFERENCE
EWT	ENTERING WATER TEMPERATURE	RL	REFRIGERANT LIQUID
° F	DEGREES FAHRENHEIT	RLA	RUNNING LOAD AMPS
FCU	FAN COIL UNIT	RM	ROOM
FD	FIRE DAMPER	RPM	REVOLUTIONS PER MINUTE
FLA	FULL LOAD AMPS	RS	REFRIGERANT SUCTION
FLR	FLOOR	S/A	SUPPLY AIR
FPVAV	FAN-POWERED VARIABLE AIR VOLUME	SD	SMOKE DETECTOR
FSD	COMBINATION FIRE-SMOKE DAMPER	SF	SUPPLY FAN
FT.	FEET	SPECS	SPECIFICATIONS
FT. W.G.	FEET WATER GAUGE	T, T-STAT	THERMOSTAT
GA	U.S. GAUGE	T/A	TRANSFER AIR
GPM	GALLONS PER MINUTE	TEN	TENANT
H	HEIGHT	THRU	THROUGH
HP	HORSEPOWER	TSP	TOTAL STATIC PRESSURE
HPS	HIGH PRESSURE STEAM	TYP	TYPICAL
HWR	HEATING WATER RETURN	UL	UNDERWRITERS LABORATORIES, INC.
HWS	HEATING WATER SUPPLY	UH	UNIT HEATER
HZ	HERTZ	UON	UNLESS OTHERWISE NOTED
IN.	INCH(ES)	V	VOLTS
IN. W.G.	INCHES WATER GAUGE	VAV	VARIABLE AIR VOLUME
IOM	INSTALLATION AND OPERATION MANUAL	VFD	VARIABLE FREQUENCY DRIVE
J-BOX	JUNCTION BOX	VIF	VERIFY IN FIELD
kW	KILOWATT	W/	WITH
L	LENGTH	WB	WET-BULB
LAT	LEAVING AIR TEMPERATURE	W/O	WITHOUT

NOTE: NOT ALL SYMBOLS OR ABBREVIATIONS MAY APPEAR ON PLANS.

HVAC LEGEND

- 12"ø — ROUND DUCTWORK #"Ø" INDICATES DIAMETER
- 12"ø — ROUND DUCTWORK - INTERNALLY LINED #"Ø" INDICATES DIAMETER
- 12/10 — RECTANGULAR DUCTWORK *1ST NUMBER INDICATES SIZE ON PLAN VIEW *2ND NUMBER INDICATES SIZE NOT SHOWN
- 12/10 — ACOUSTICAL DUCT LINE (FIGURES SHOWN ARE INSIDE DUCT DIMENSIONS)
- RECTANGULAR DUCT UP
- ROUND DUCT UP
- RECTANGULAR DUCT DN
- ROUND DUCT DN
- UP — CHANGE OF ELEVATION, RISE (UP) OR DROP (DN) IN DIRECTION OF ARROW
- DUCTWORK BRANCH TAKE-OFF
- DUCTWORK BRANCH TAKE-OFF - SQUARE TO ROUND
- M — MOTORIZED DAMPER
- FIRE DAMPER AND ACCESS DOOR
- F — VOLUME DAMPER
- DUCTWORK ELBOW
- DUCTWORK TRANSITION
- MITERED ELBOW W/TURNING VANES
- S3 / 70 — TAG / CFM — DIFFUSER TAG
- T — THERMOSTAT
- CO2 — CARBON DIOXIDE SENSOR
- SP — STATIC PRESSURE SENSOR
- S — TEMPERATURE SENSOR
- F — FIRE DAMPER
- SD — SMOKE DETECTOR
- DOOR UNDERCUT
- SUPPLY DIFFUSER
- RETURN DIFFUSER

GHA
Architecture / Development
14901 Quorum Drive
Suite 300
Dallas Texas 75254
Ph: (972) 239–8884
Fax: (972) 239–5054

STATE OF MICHIGAN — GRANT REID CLAUSSEN — License No. 6201309682 — LICENSED PROFESSIONAL ENGINEER

12-17-2021

GHC ENGINEERS
Engineering Firm : F-21834
GHC Engineers, LLC
14901 Quorum Dr, Ste 300
Dallas, Texas 75254
Office: 972-239-8884
gclaussen@ghcengineers.com
Project # G21-0959.001

EST. 1998 SCOOTER'S COFFEE

PROJECT ADDRESS:
1490 WEST ANN ARBOR ROAD
PLYMOUTH, MI 48170

REVISIONS:

TITLE:
MECHANICAL LEGENDS, NOTES, ABBRV.

DATE:
09/16/2021

PROJECT NO.
210536

- [ ] DESIGN DEVELOPMENT
- [x] PERMIT SUBMITTAL
- [ ] BID PACKAGE
- [ ] CONSTRUCTION ISSUE

SHEET NO.
M1.02

THIS DRAWING AND ITS CONTENTS ARE THE COPYRIGHTED PROPERTY OF GHA ARCHITECTS AND SITE SET FORTH ABOVE, AND MAY NOT BE OTHERWISE USED OR REPRODUCED, IN WHOLE OR IN PART, WITHOUT THE WRITTEN PERMISSION OF GHA ARCHITECTS. THE ARCHITECT. THIS DRAWING IS TO BE RETURNED UPON REQUEST.

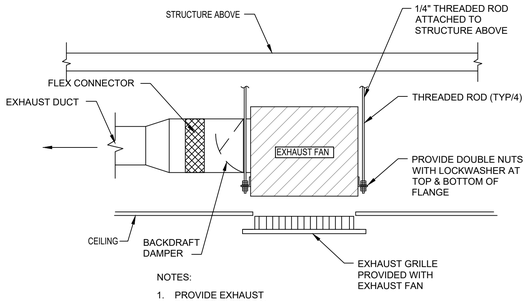

NOTES:

1. PROVIDE EXHAUST FAN WITH INTEGRAL BACKDRAFT DAMPER.

7 CEILING EXHAUST FAN DETAIL

SCALE: N.T.S.

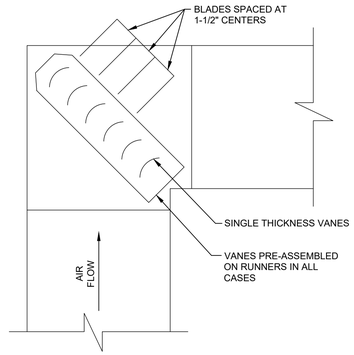

6 TYP SQUARE ELBOW DETAIL

SCALE: N.T.S.

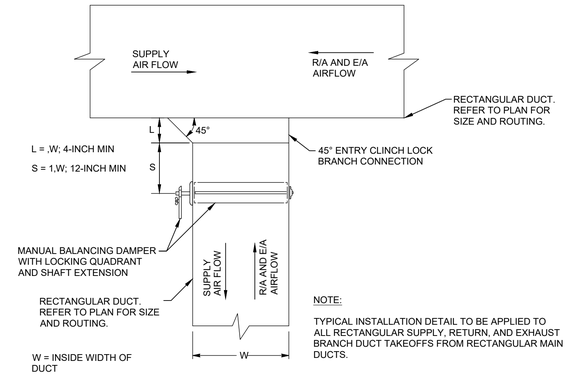

NOTE:

TYPICAL INSTALLATION DETAIL TO BE APPLIED TO ALL RECTANGULAR SUPPLY, RETURN, AND EXHAUST BRANCH DUCT TAKEOFFS FROM RECTANGULAR MAIN DUCTS.

5 TYP RECTANGULAR BRANCH TAKEOFF DETAIL

SCALE: N.T.S.

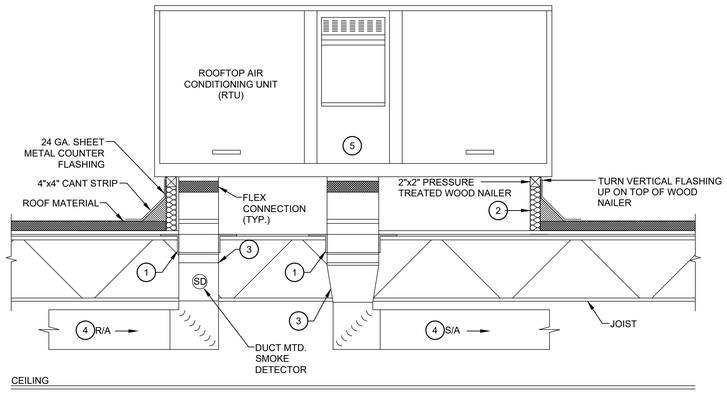

NOTES:

1. REFER TO STRUCTURAL DRAWINGS FOR SUPPORT REQUIREMENTS.
2. RTU'S SHALL BE MOUNTED ON FACTORY PROVIDED ROOF CURBS AND SHALL BE "PLUMB" AND SET LEVEL ON ROOF IN BOTH DIRECTIONS. THE VERTICAL DIMENSION OF THE CURB WALLS SHALL BE TAPERED AS REQUIRED TO COMPENSATE FOR THE ROOF SLOPE AND ALLOW THE RTU TO SET LEVEL. REFER TO THE ARCHITECTURAL AND STRUCTURAL DRAWINGS FOR ROOF SLOPE INFORMATION. CURB TO BE FACTORY INSULATED WITH MIN R-8 RIGID INSULATION, MIN 14" HIGH.
3. PROVIDE TRANSITION AND/OR OFFSET AS INDICATED OR REQUIRED.
4. SIZE, LOCATE, AND ROUTE S/A AND R/A DUCT AS SHOWN ON PLANS.
5. CONTRACTOR MAY ROUTE UTILITIES AND DRAIN INSIDE CURB.

4 TYP ROOFTOP UNIT INSTALLATION DETAIL

SCALE: N.T.S.

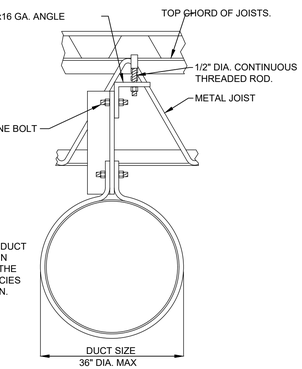

NOTE:

DISTANCE BETWEEN DUCT HANGERS SHALL BE IN ACCORDANCE WITH THE RULES OF THE AGENCIES HAVING JURISDICTION.

MAX WEIGHT PER FOOT = 16 LBS.

DIAMETER INCHES	SPIRAL SEAM DUCT STEEL MIN. GALV. SHT. GAUGE	ROUND DUCTS LONGITUDINAL SEAM DUCT STEEL MIN. GALV. SHT. GAUGE	FITTINGS STEEL MIN. GALV. SHT. GAUGE
THROUGH 12"Ø	28 (0.019 IN.)	26 (0.022 IN.)	26 (0.022 IN.)
13"Ø THROUGH 18"Ø	26 (0.022 IN.)	24 (0.028 IN.)	24 (0.028 IN.)
19"Ø THROUGH 28"Ø	24 (0.028 IN.)	22 (0.034 IN.)	22 (0.034 IN.)
29"Ø THROUGH 36"Ø	22 (0.034 IN.)	20 (0.040 IN.)	20 (0.040 IN.)
37"Ø THROUGH 52"Ø	20 (0.040 IN.)	18 (0.052 IN.)	18 (0.052 IN.)

3 TYP SPIRAL SEAM/ROUND DUCTWORK SUPPORT DETAIL

SCALE: N.T.S.

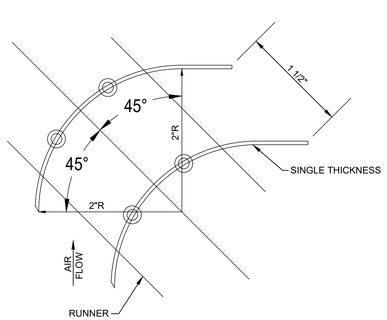

2 TYP TURNING VANE DETAIL

SCALE: N.T.S.

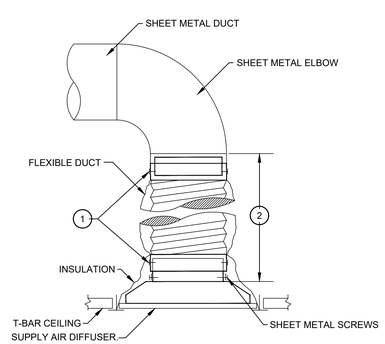

NOTES:

1. USE PLENUM COLLARS TO ATTACH FLEXIBLE DUCT . USE SHEET METAL SCREWS AND (2) WRAPS OF TAPE TO SECURE PLENUM COLLARS. ALTERNATE METHOD: BANDING DEVICE OR PANDUIT STRAP, IN LIEU OF SHEET METAL SCREWS. ALL TAPES AND SEALING MATERIALS SHALL COMPLY WITH UL181A FOR RIGID DUCT AND UL181B FOR FLEXIBLE DUCT.
2. SECURE SHEET METAL DROP TO DIFFUSER NECK WITH A MIN. OF (3) SHEET METAL SCREWS AND (2) FULL WRAPS OF TAPE PER UL REQUIREMENTS LISTED IN NOTE 1.
3. ALL FLEX DUCT SHALL BE INSTALLED WITHOUT KINKS, SAGGING, OR SHORT-RADIUS BENDS.

1 TYP FLEXDUCT CONNECTION DETAIL

SCALE: N.T.S.

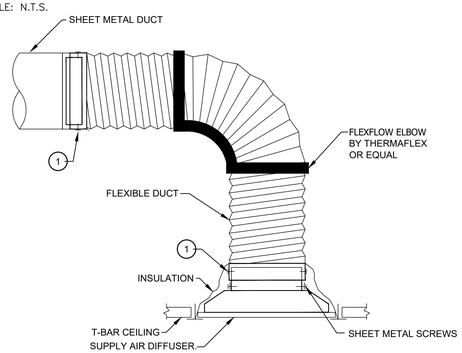

NOTES:

1. USE PLENUM COLLARS TO ATTACH FLEXIBLE DUCT . USE SHEET METAL SCREWS AND (2) WRAPS OF TAPE TO SECURE PLENUM COLLARS. ALTERNATE METHOD: BANDING DEVICE OR PANDUIT STRAP, IN LIEU OF SHEET METAL SCREWS. ALL TAPES AND SEALING MATERIALS SHALL COMPLY WITH UL181A FOR RIGID DUCT AND UL181B FOR FLEXIBLE DUCT.
2. IF A MINIMUM OF 2 DIAMETERS OF STRAIGHT RUN IS NOT AVAILABLE ABOVE THE REGISTER USE HARD DUCT SHORT RADIUS CONNECTION.
3. ALL FLEX DUCT SHALL BE INSTALLED WITHOUT KINKS, SAGGING, OR SHORT-RADIUS BENDS.

GHA
Architecture / Development
14901 Quorum Drive
Suite 300
Dallas Texas 75254
Ph: (972) 239-8884
Fax: (972) 239-5054

STATE OF MICHIGAN
GRANT REID CLAUSSEN
License No. 6201309682
LICENSED PROFESSIONAL ENGINEER

12-17-2021

Engineering Firm : F-21834
GHC Engineers, LLC
14901 Quorum Dr, Ste 300
Dallas, Texas 75254
Office: 972-239-8884
gclaussen@ghcengineers.com
Project # G21-0959.001

EST. 1998 SCOOTER'S COFFEE

PROJECT ADDRESS:
1490 WEST ANN ARBOR ROAD
PLYMOUTH, MI 48170

REVISIONS:

TITLE:

MECHANICAL DETAILS

DATE:
09/16/2021

PROJECT NO.
210536

- [ ] DESIGN DEVELOPMENT
- [x] PERMIT SUBMITTAL
- [ ] BID PACKAGE
- [ ] CONSTRUCTION ISSUE

SHEET NO.

M1.03

THIS DRAWING AND ITS CONTENTS ARE THE COPYRIGHTED PROPERTY OF GHA ARCHITECTS USE THEREOF IS LIMITED TO THE SPECIFIC PROJECT AND SITE SET FORTH ABOVE, AND MAY NOT BE OTHERWISE USED OR REPRODUCED, IN WHOLE OR IN PART, WITHOUT THE WRITTEN PERMISSION OF GHA ARCHITECTS, THE ARCHITECT. THIS DRAWING IS TO BE RETURNED UPON REQUEST.

THIS DRAWING AND ITS CONTENTS ARE THE COPYRIGHTED PROPERTY OF GHA ARCHITECTS. USE THEREOF IS LIMITED TO THE SPECIFIC PROJECT AND SITE SET FORTH ABOVE, AND MAY NOT BE OTHERWISE USED OR REPRODUCED, IN WHOLE OR IN PART, WITHOUT THE WRITTEN PERMISSION OF GHA ARCHITECTS. THE ARCHITECT. THIS DRAWING IS TO BE RETURNED UPON REQUEST.

COM*check* Software Version 4.1.5.1

Mechanical Compliance Certificate

Project Information

Energy Code: 2015 IECC
Project Title: SCOOTER'S COFFEE
Location: Plymouth (Wayne), Michigan
Climate Zone: 5a
Project Type: New Construction

Construction Site:
1490 West Ann Arbor Rd.
Plymouth, MI 48170

Owner/Agent:
SCOOTER'S COFFEE

Designer/Contractor:
GRANT CLAUSSEN
GHC ENGINEERS
14901 QUORUM DR.
STE 300
DALLAS, TX 75254
9722398884
gclaussen@ghcengineers.com

Additional Efficiency Package(s)

On-site Renewable Energy

Mechanical Systems List

Quantity	System Type & Description
1	HVAC System 1 (Single Zone): Heating: 1 each - Other, Electric, Capacity = 54 kBtu/h No minimum efficiency requirement applies Cooling: 1 each - Single Package DX Unit, Capacity = 47 kBtu/h, Air-Cooled Condenser, Air Economizer Proposed Efficiency = 14.00 SEER, Required Efficiency: 14.00 SEER Fan System: FAN SYSTEM 1 -- Compliance (Motor nameplate HP method) : Passes Fans: FAN 1 Supply, Constant Volume, 2000 CFM, 1.4 motor nameplate hp, 0.8 fan efficiency grade
1	Water Heater 1: Electric Instantaneous Water Heater, Capacity: 40 gallons w/ Circulation Pump Proposed Efficiency: 1.00 SL, %/h (if > 12 kW), Required Efficiency: 0.98 SL, %/h (if > 12 kW)

Mechanical Compliance Statement

Compliance Statement: The proposed mechanical design represented in this document is consistent with the building plans, specifications, and other calculations submitted with this permit application. The proposed mechanical systems have been designed to meet the 2015 IECC requirements in COM*check* Version 4.1.5.1 and to comply with any applicable mandatory requirements listed in the Inspection Checklist.

Grant R. Claussen P.E. — Name - Title
Signature
12/17/2021 — Date

COM*check* Software Version 4.1.5.1

Inspection Checklist

Energy Code: 2015 IECC

Requirements: 100.0% were addressed directly in the COM*check* software

Text in the "Comments/Assumptions" column is provided by the user in the COMcheck Requirements screen. For each requirement, the user certifies that a code requirement will be met and how that is documented, or that an exception is being claimed. Where compliance is itemized in a separate table, a reference to that table is provided.

Section # & Req.ID	Plan Review	Complies?	Comments/Assumptions
C103.2 [PR2][1]	Plans, specifications, and/or calculations provide all information with which compliance can be determined for the mechanical systems and equipment and document where exceptions to the standard are claimed. Load calculations per acceptable engineering standards and handbooks.	☐Complies ☐Does Not ☐Not Observable ☐Not Applicable	Requirement will be met.
C103.2 [PR3][1]	Plans, specifications, and/or calculations provide all information with which compliance can be determined for the service water heating systems and equipment and document where exceptions to the standard are claimed. Hot water system sized per manufacturer's sizing guide.	☐Complies ☐Does Not ☐Not Observable ☐Not Applicable	Requirement will be met.
C406 [PR9][1]	Plans, specifications, and/or calculations provide all information with which compliance can be determined for the additional energy efficiency package options.	☐Complies ☐Does Not ☐Not Observable ☐Not Applicable	Requirement will be met.

Additional Comments/Assumptions:

1 High Impact (Tier 1) | 2 Medium Impact (Tier 2) | 3 Low Impact (Tier 3)

Section # & Req.ID	Footing / Foundation Inspection	Complies?	Comments/Assumptions
C403.2.4.5, C403.2.4.6 [FO9][1]	Snow/ice melting system sensors for future connection to controls. Freeze protection systems have automatic controls installed.	☐Complies ☐Does Not ☐Not Observable ☐Not Applicable	**Exception:** Requirement does not apply.

Additional Comments/Assumptions:

1 High Impact (Tier 1) | 2 Medium Impact (Tier 2) | 3 Low Impact (Tier 3)

Section # & Req.ID	Plumbing Rough-In Inspection	Complies?	Comments/Assumptions
C404.5, C404.5.1, C404.5.2 [PL6][1]	Heated water supply piping conforms to pipe length and volume requirements. Refer to section details.	☐Complies ☐Does Not ☐Not Observable ☐Not Applicable	**Exception:** Requirement does not apply.
C404.5, C404.5.1, C404.5.2 [PL6][1]	Heated water supply piping conforms to pipe length and volume requirements. Refer to section details.	☐Complies ☐Does Not ☐Not Observable ☐Not Applicable	Requirement will be met.
C404.6.1, C404.6.2 [PL3][1]	Automatic time switches installed to automatically switch off the recirculating hot-water system or heat trace.	☐Complies ☐Does Not ☐Not Observable ☐Not Applicable	Requirement will be met.
C404.6.3 [PL7][1]	Pumps that circulate water between a heater and storage tank have controls that limit operation from startup to <= 5 minutes after end of heating cycle.	☐Complies ☐Does Not ☐Not Observable ☐Not Applicable	**Exception:** Requirement does not apply.
C404.6.3 [PL7][1]	Pumps that circulate water between a heater and storage tank have controls that limit operation from startup to <= 5 minutes after end of heating cycle.	☐Complies ☐Does Not ☐Not Observable ☐Not Applicable	Requirement will be met.
C404.7 [PL8][1]	Water distribution system that pumps water from a heated-water suppy pipe back to the heated-water source through a cold-water supply pipe is a demand recirculation water system. Pumps within this system have controls that start the pump upon receiving a signal from the action of a user of a fixture or appliance and limits the temperature of the water entering the cold-water piping to 104°F.	☐Complies ☐Does Not ☐Not Observable ☐Not Applicable	**Exception:** Requirement does not apply.
C404.7 [PL8][1]	Water distribution system that pumps water from a heated-water suppy pipe back to the heated-water source through a cold-water supply pipe is a demand recirculation water system. Pumps within this system have controls that start the pump upon receiving a signal from the action of a user of a fixture or appliance and limits the temperature of the water entering the cold-water piping to 104°F.	☐Complies ☐Does Not ☐Not Observable ☐Not Applicable	Requirement will be met.

Additional Comments/Assumptions:

1 High Impact (Tier 1) | 2 Medium Impact (Tier 2) | 3 Low Impact (Tier 3)

Section # & Req.ID	Mechanical Rough-In Inspection	Complies?	Comments/Assumptions
C402.2.6 [ME41][1]	Thermally ineffective panel surfaces of sensible heating panels have insulation >= R-3.5.	☐Complies ☐Does Not ☐Not Observable ☐Not Applicable	**Exception:** Requirement does not apply.
C403.2.13 [ME71][2]	Unenclosed spaces that are heated use only radiant heat.	☐Complies ☐Does Not ☐Not Observable ☐Not Applicable	**Exception:** Requirement does not apply.
C403.2.3 [ME55][2]	HVAC equipment efficiency verified.	☐Complies ☐Does Not ☐Not Observable ☐Not Applicable	*See the Mechanical Systems list for values.*
C403.2.6.1 [ME59][1]	Demand control ventilation provided for spaces >500 ft2 and >25 people/1000 ft2 occupant density and served by systems with air side economizer, auto modulating outside air damper control, or design airflow >3,000 cfm.	☐Complies ☐Does Not ☐Not Observable ☐Not Applicable	**Exception:** Requirement does not apply.
C403.2.6.2 [ME115][1]	Enclosed parking garage ventilation has automatic contaminant detection and capacity to stage or modulate fans to 50% or less of design capacity.	☐Complies ☐Does Not ☐Not Observable ☐Not Applicable	**Exception:** Requirement does not apply.
C403.2.7 [ME57][1]	Exhaust air energy recovery on systems meeting Table C403.2.7(1) and C403.2.7(2).	☐Complies ☐Does Not ☐Not Observable ☐Not Applicable	**Exception:** Requirement does not apply.
C403.2.8 [ME116][1]	Kitchen exhaust systems comply with replacement air and conditioned supply air limitations, and satisfy hood rating requirements and maximum exhaust rate criteria.	☐Complies ☐Does Not ☐Not Observable ☐Not Applicable	**Exception:** Requirement does not apply.
C403.2.9 [ME60][2]	HVAC ducts and plenums insulated. Where ducts or plenums are installed in or under a slab, verification may need to occur during Foundation Inspection.	☐Complies ☐Does Not ☐Not Observable ☐Not Applicable	Requirement will be met.
C403.2.9 [ME10][2]	Ducts and plenums sealed based on static pressure and location.	☐Complies ☐Does Not ☐Not Observable ☐Not Applicable	Requirement will be met.
C403.2.9.1.3 [ME11][1]	Ductwork operating >3 in. water column requires air leakage testing.	☐Complies ☐Does Not ☐Not Observable ☐Not Applicable	**Exception:** Requirement does not apply.
C403.4.4.6 [ME110][1]	Multiple zone VAV systems with DDC of individual zone boxes have static pressure setpoint reset controls.	☐Complies ☐Does Not ☐Not Observable ☐Not Applicable	**Exception:** Requirement does not apply. *See the Mechanical Systems list for values.*
C408.2.2.1 [ME53][1]	Air outlets and zone terminal devices have means for air balancing.	☐Complies ☐Does Not ☐Not Observable ☐Not Applicable	Requirement will be met.

1 High Impact (Tier 1) | 2 Medium Impact (Tier 2) | 3 Low Impact (Tier 3)

Section # & Req.ID	Mechanical Rough-In Inspection	Complies?	Comments/Assumptions
C403.5, C403.5.1, C403.5.2 [ME123][1]	Refrigerated display cases, walk-in coolers or walk-in freezers served by remote compressors and remote condensers not located in a condensing unit, have fan-powered condensers that comply with Sections C403.5.1 and refrigeration compressor systems that comply with C403.5.2.	☐Complies ☐Does Not ☐Not Observable ☐Not Applicable	**Exception:** Requirement does not apply.

Additional Comments/Assumptions:

1 High Impact (Tier 1) | 2 Medium Impact (Tier 2) | 3 Low Impact (Tier 3)

GHA
Architecture / Development
14901 Quorum Drive
Suite 300
Dallas Texas 75254
Ph: (972) 239–8884
Fax: (972) 239–5054

STATE OF MICHIGAN
GRANT REID CLAUSSEN
License No. 6201309682
LICENSED PROFESSIONAL ENGINEER

12-17-2021

Engineering Firm : F-21834
GHC Engineers, LLC
14901 Quorum Dr, Ste 300
Dallas, Texas 75254
Office: 972-239-8884
gclaussen@ghcengineers.com
Project # G21-0959.001

EST. 1998 SCOOTER'S COFFEE

PROJECT ADDRESS:
1490 WEST ANN ARBOR ROAD
PLYMOUTH, MI 48170

REVISIONS:

TITLE:
MECHANICAL COMCHECK

DATE:
09/16/2021

PROJECT NO.
210536

- ☐ DESIGN DEVELOPMENT
- ☒ PERMIT SUBMITTAL
- ☐ BID PACKAGE
- ☐ CONSTRUCTION ISSUE

SHEET NO.
M1.04

Section # & Req.ID	Final Inspection	Complies?	Comments/Assumptions
C303.3, C408.2.5.3 [FI8][3]	Furnished O&M manuals for HVAC systems within 90 days of system acceptance.	☐Complies ☐Does Not ☐Not Observable ☐Not Applicable	Requirement will be met.
C403.2.2 [FI27][3]	HVAC systems and equipment capacity does not exceed calculated loads.	☐Complies ☐Does Not ☐Not Observable ☐Not Applicable	Requirement will be met.
C403.2.4.1 [FI47][3]	Heating and cooling to each zone is controlled by a thermostat control. Minimum one humidity control device per installed humidification/dehumidification system.	☐Complies ☐Does Not ☐Not Observable ☐Not Applicable	Requirement will be met.
C403.2.4.1.2 [FI38][3]	Thermostatic controls have a 5 °F deadband.	☐Complies ☐Does Not ☐Not Observable ☐Not Applicable	Requirement will be met.
C403.2.4.1.3 [FI20][3]	Temperature controls have setpoint overlap restrictions.	☐Complies ☐Does Not ☐Not Observable ☐Not Applicable	Requirement will be met.
C403.2.4.2 [FI39][3]	Each zone equipped with setbacx controls using automatic time clock or programmable control system.	☐Complies ☐Does Not ☐Not Observable ☐Not Applicable	Requirement will be met.
C403.2.4.2.1, C403.2.4.2.2 [FI40][3]	Automatic Controls: Setback to 55°F (heat) and 85°F (cool); 7-day clock, 2-hour occupant override, 10-hour backup	☐Complies ☐Does Not ☐Not Observable ☐Not Applicable	Requirement will be met.
C403.2.4.2.3 [FI41][3]	Systems include optimum start controls.	☐Complies ☐Does Not ☐Not Observable ☐Not Applicable	Requirement will be met.
C404.3 [FI11][3]	Heat traps installed on supply and discharge piping of non-circulating systems.	☐Complies ☐Does Not ☐Not Observable ☐Not Applicable	Requirement will be met.
C404.4 [FI25][2]	All piping insulated in accordance with section details and Table C403.2.10.	☐Complies ☐Does Not ☐Not Observable ☐Not Applicable	Requirement will be met.
C404.6.1 [FI12][3]	Controls are installed that limit the operation of a recirculation pump installed to maintain temperature of a storage tank. System return pipe is a dedicated return pipe or a cold water supply pipe.	☐Complies ☐Does Not ☐Not Observable ☐Not Applicable	Requirement will be met.
C408.2.1 [FI28][1]	Commissioning plan developed by registered design professional or approved agency.	☐Complies ☐Does Not ☐Not Observable ☐Not Applicable	Requirement will be met.

1	High Impact (Tier 1)	2	Medium Impact (Tier 2)	3	Low Impact (Tier 3)

Section # & Req.ID	Final Inspection	Complies?	Comments/Assumptions
C408.2.3.1 [FI31][1]	HVAC equipment has been tested to ensure proper operation.	☐Complies ☐Does Not ☐Not Observable ☐Not Applicable	Requirement will be met.
C408.2.3.2 [FI10][1]	HVAC control systems have been tested to ensure proper operation, calibration and adjustment of controls.	☐Complies ☐Does Not ☐Not Observable ☐Not Applicable	Requirement will be met.
C408.2.4 [FI29][1]	Preliminary commissioning report completed and certified by registered design professional or approved agency.	☐Complies ☐Does Not ☐Not Observable ☐Not Applicable	Requirement will be met.
C408.2.5.1 [FI7][3]	Furnished HVAC as-built drawings submitted within 90 days of system acceptance.	☐Complies ☐Does Not ☐Not Observable ☐Not Applicable	Requirement will be met.
C408.2.5.3 [FI43][1]	An air and/or hydronic system balancing report is provided for HVAC systems.	☐Complies ☐Does Not ☐Not Observable ☐Not Applicable	Requirement will be met.
C408.2.5.4 [FI30][1]	Final commissioning report due to building owner within 90 days of receipt of certificate of occupancy.	☐Complies ☐Does Not ☐Not Observable ☐Not Applicable	Requirement will be met.

Additional Comments/Assumptions:

1	High Impact (Tier 1)	2	Medium Impact (Tier 2)	3	Low Impact (Tier 3)

THIS DRAWING AND ITS CONTENTS ARE THE COPYRIGHTED PROPERTY OF GHA ARCHITECTS. USE THEREOF IS LIMITED TO THE SPECIFIC PROJECT AND SITE SET FORTH ABOVE, AND MAY NOT BE OTHERWISE USED OR REPRODUCED, IN WHOLE OR IN PART, WITHOUT THE WRITTEN PERMISSION OF GHA ARCHITECTS, THE ARCHITECT. THIS DRAWING IS TO BE RETURNED UPON REQUEST.

GHA
Architecture / Development
14901 Quorum Drive
Suite 300
Dallas Texas 75254
Ph: (972) 239-8884
Fax: (972) 239-5054

STATE OF MICHIGAN
GRANT REID CLAUSSEN
License No. 6201309682
LICENSED PROFESSIONAL ENGINEER

12-17-2021

Engineering Firm : F-21834
GHC Engineers, LLC
14901 Quorum Dr, Ste 300
Dallas, Texas 75254
Office: 972-239-8884
gclaussen@ghcengineers.com
Project # G21-0959.001

EST. 1998 SCOOTER'S COFFEE

PROJECT ADDRESS:
1490 WEST ANN ARBOR ROAD
PLYMOUTH, MI 48170

REVISIONS:

TITLE:

MECHANICAL COMCHECK

DATE:
09/16/2021

PROJECT NO.
210536

- ☐ DESIGN DEVELOPMENT
- ☒ PERMIT SUBMITTAL
- ☐ BID PACKAGE
- ☐ CONSTRUCTION ISSUE

SHEET NO.

M1.05

PACKAGED ROOFTOP UNIT SCHEDULE

MARK	NOMINAL TONNAGE	SUPPLY AIR (CFM)	OUTSIDE AIR (CFM)	EXTERNAL STATIC PRESSURE (IN. WC)	MOTOR (HP)	COOLING CAPACITY				HEATING CAPACITY		ELECTRICAL DATA					SEER/EER	WEIGHT (LBS.)	MANUFACTURER	MODEL NUMBER	REMARKS
						SENSIBLE (MBH)	TOTAL (MBH)	EAT (DB°F/WB°F)	LAT (DB°F/WB°F)	kW	EAT/LAT (°F)	VOLTAGE	PHASE	HERTZ	MCA	MOCP					
RTU-1	5	2,000	140	0.5	1.4	45.20	47.35	100/67	58.1/57.4	15.8	70/95	208	3	60	57	70	16.10/11.13	639	CARRIER	50GC-M06K2M5	1-13

1. PROVIDE OUTSIDE AIR INTAKE HOOD WITH SCREENED OPENING.
2. PROVIDE AND INSTALL ROOF CURB UNIT. ROOF CURB SHALL MATCH ROOF SLOPE. TOP OF CURB SHALL SHALL BE 14" (MINIMUM) ABOVE FINISH ROOF. CURB HEIGHT SHALL BE CLEARLY IDENTIFIED IN ROOFTOP UNIT SUBMITTAL.
3. UNIT SHALL BE CAPABLE OF OPERATING WITH 2" THICK PLEATED THROWAWAY FILTER RATED AT MERV 8. CONTRACTOR SHALL PROVIDE (2) NEW SETS OF FILTERS FOR UNIT (OWNERS USE). TURN FILTERS OVER TO OWNER PRIOR TO COMPLETION OF PROJECT. LABEL FILTERS WITH RESPECTIVE EQUIPMENT DESIGNATION.
4. PROVIDE DRY BULB ECONOMIZER AND BAROMETRIC RELIEF..
5. PROVIDE UNIT WITH MODULATING OUTSIDE AIR DAMPER.
6. FURNISH WITH DISCHARGE AIR TEMPERATURE SENSOR.
7. FINAL UNIT WEIGHT OF RTU TO BE ORDERED IS TO BE COORDINATED WITH THE STRUCTURAL ENGINEERING PRIOR TO FINALIZING ORDER. WEIGHT SHOWN DOES NOT INCLUDE ROOF CURBS.
8. PROVIDE UNIT WITH HAIL GUARDS.
9. PROVIDE AND INSTALL SMOKE DETECTOR IN THE RETURN DUCTWORK FOR EACH UNIT. SMOKE DETECTOR SHALL DE-ENERGIZE UNIT UPON DETECTION OF SMOKE AND BE INTERLOCKED WITH SUPPLY FAN AS REQUIRED BY CODE. LOCATE UPSTREAM OF OUTSIDE AIR CONNECTION.
10. UNITS SHALL HAVE SINGLE POINT POWER CONNECTION.
11. CAPACITIES LISTED ARE NET VALUES.
12. THE UNIT PERFORMANCE MUST SATISFY BOTH SENSIBLE AND LATENT CAPACITY REQUIREMENTS.
13. VALUES ARE SITE SPECIFIC. MODIFY UNIT PERFORMANCE PER SITE CONDITIONS.

FAN SCHEDULE

MARK	LOCATION	CFM	EXT. SP IN W.G.	VOLTAGE	PHASE	WATTS	DRIVE	MAX SONES	MANUFACTURER	MODEL NUMBER	WEIGHT (LBS)	REMARKS
EF-1	CEILING	75	0.25	120	1	59	DIRECT	5.0	COOK	GEMINI GC-128	15	1,3,5,6,8

NOTES:
1. OR APPROVED EQUAL
2. FAN TO RUN CONTINUOUSLY DURING OCCUPIED HOURS. PROVIDE WITH 7-DAY PROGRAMMABLE TIMECLOCK: PARAGON MODEL EL 78 OR APPROVED EQUAL
3. INTERLOCK FAN WITH LIGHT SWITCH. REFER TO POWER AND LIGHTING DRAWINGS.
4. PROVIDE PRE-WIRED FAN SPEED CONTROLLER
5. PROVIDE A GRAVITY BACKDRAFT DAMPER
6. SUSPEND FROM STRUCTURE ABOVE. USE MANUFACTURER'S HANGING VIBRATION ISOLATOR KIT. DO NOT SUPPORT FAN FROM CEILING.
7. PROVIDE FAN WITH INTEGRAL DISCONNECT
8. PROVIDE WHITE, ALUMINUM GRILLE

AIR DEVICE SCHEDULE

TAG	MANUFACTURER	MODEL	FACE SIZE	NECK SIZE	DESCRIPTION	REMARKS
S1	TITUS	TMS	24x24	SEE PLAN	WHITE, STEEL	1,2,3
S2	TITUS	TDC-44	12x12		WHITE, ALUMINMUM	1,2,3
R1	TITUS	350RL	24x24		WHITE, STEEL	1,2,3

1. 4-WAY UNLESS NOTED OTHERWISE.
2. PROVIDE OPP BLADE DAMPER AT EACH SUPPLY UNLESS BALANCING DAMPER IS PROVIDED AT RUNOUT TAKEOFF.
3. LAY-IN OR SURFACE MOUNTING FRAME TO MATCH ARCHITECTURAL CEILING TYPE.

AIR DEVICE RUN-OUT SIZING

SUPPLY DUCTWORK		RETURN/EXHAUST DUCTWORK	
RUNOUT CFM	RUNOUT Ø	RUNOUT CFM	RUNOUT Ø
0-100	6"	0-75	6"
101-210	8"	76-170	8"
211-380	10"	171-310	10"
381-630	12"	311-500	12"
631-950	14"	501-770	14"
951-1400	16"	771-1100	16"
1401-1800	18"	1101-1500	18"

1. NECK SIZE SHALL BE THE SAME AS THE RUN-OUT SIZE.

NOTES BY SYMBOL (X)

1. PROVIDE 7-DAY PROGRAMMABLE THERMOSTAT, MOUNT T-STAT AT 48" AFF. FURNISH THERMOSTAT IN APPROXIMATELY THIS LOCATION. COORDINATE EXACT LOCATION OF T-STAT AND TEMPERATURE/HUMIDITY SENSOR WITH ARCHITECT PRIOR TO INSTALLATION. THERMOSTAT TO BE INSTALLED AT 48" A.F.F. AND TEMPERATURE/HUMIDITY SENSOR AT 60" A.F.F.
2. PROVIDE 3/4" CONDENSATE FROM ROOFTOP UNIT TO APPROVED RECEPTOR. PROVIDE CONDENSATE PUMP PER SCHEDULE.
3. PROVIDE 6"Ø EXHAUST DUCT UP THROUGH ROOF AND TERMINATE WITH ROOF CAP. COORDINATE LOCATION OF ROOF PENETRATION AND RAIN CAP TO MAINTAIN 10'-0" CLEARANCE FROM FRESH AIR INTAKES.
4. CONNECT NEW FLUE DUCT FROM FURNACE TO EXISTING FLUE.
5. NEW ROOFTOP UNIT MOUNTED ON ROOF CURB. PROVIDE NE SUPPLY/RETURN DUCT FROM NEW RTU ON ROOF. TRANSITION FROM/TO FULL SIZE CONNECTION AT EQUIPMENT AS REQUIRED. BALANCE OUTSIDE AIR FLOW TO CFM INDICATED ON SCHEDULE.

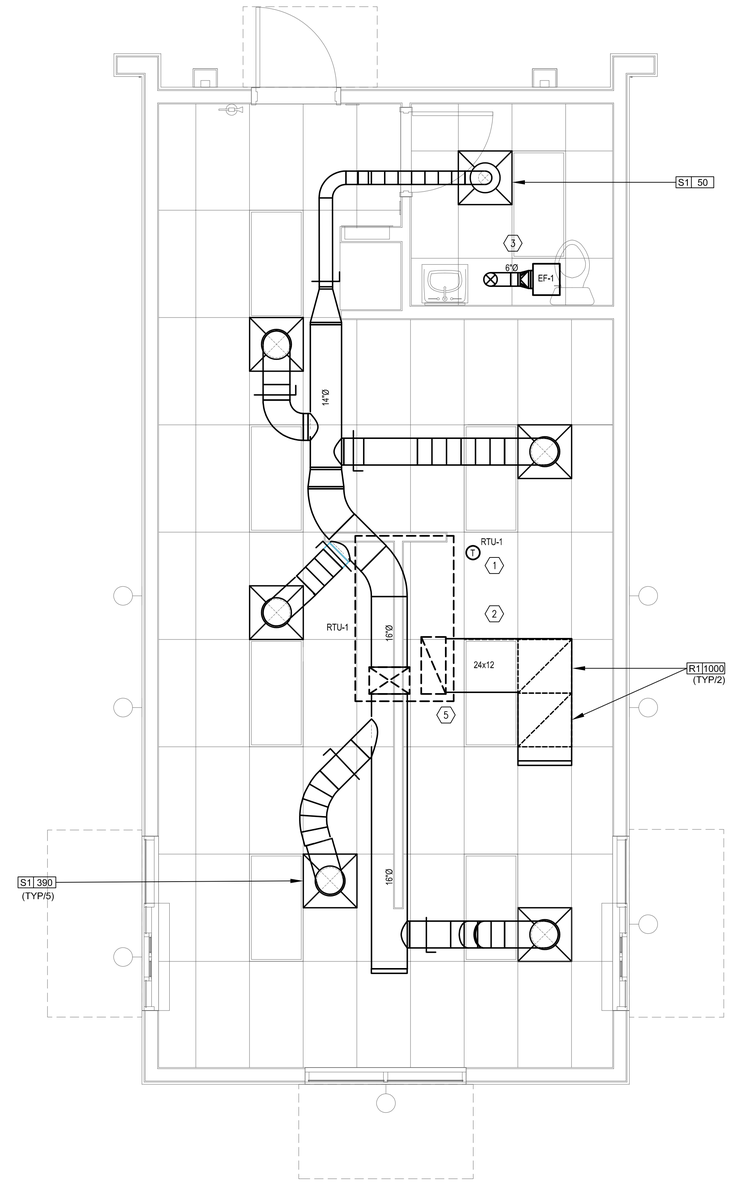

1 MECHANICAL FLOOR PLAN
SCALE: 3/8" = 1'-0"

NORTH

GHA
Architecture / Development
14901 Quorum Drive
Suite 300
Dallas Texas 75254
Ph: (972) 239-8884
Fax: (972) 239-5054

STATE OF MICHIGAN
GRANT REID CLAUSSEN
License No. 6201309682
LICENSED PROFESSIONAL ENGINEER

12-17-2021

Engineering Firm : F-21834
GHC Engineers, LLC
14901 Quorum Dr, Ste 300
Dallas, Texas 75254
Office: 972-239-8884
gclaussen@ghcengineers.com
Project # G21-0959.001

EST. 1998 SCOOTER'S COFFEE

PROJECT ADDRESS:
1490 WEST ANN ARBOR ROAD
PLYMOUTH, MI 48170

REVISIONS:

TITLE:
MECHANICAL FLOOR PLAN

DATE:
09/16/2021

PROJECT NO.
210536

- [ ] DESIGN DEVELOPMENT
- [x] PERMIT SUBMITTAL
- [ ] BID PACKAGE
- [ ] CONSTRUCTION ISSUE

SHEET NO.
M2.01

THIS DRAWING AND ITS CONTENTS ARE THE COPYRIGHTED PROPERTY OF GHA ARCHITECTS USE THEREOF IS LIMITED TO THE SPECIFIC PROJECT AND SITE SET FORTH ABOVE, AND MAY NOT BE OTHERWISE USED OR REPRODUCED, IN WHOLE OR IN PART, WITHOUT THE WRITTEN PERMISSION OF GHA ARCHITECTS, THE ARCHITECT. THIS DRAWING IS TO BE RETURNED UPON REQUEST.

GENERAL

1. ALL ABOVE GROUND PIPING SHALL BE SUPPORTED FROM THE BUILDING'S STRUCTURE ONLY. PIPING SHALL BE ROUTED PARALLEL WITH THE BUILDING'S LINES.
2. ALL NEW WATER SERVICE TO THE BUILDING SHALL BE EQUIPPED WITH BACKFLOW PREVENTER. BACKFLOW PREVENTER TYPE AND ORIENTATION AS NOTED ON DRAWINGS.
3. VALVES SHALL BE BY AMERICAN, CRANE, GRINNELL, HAMMOND, NIBCO, OR APPROVED EQUAL. HORIZONTAL VALVES SHALL BE INSTALLED WITH VALVE STEM UPRIGHT OR AT A MAXIMUM OF 45 DEGREES FROM VERTICAL LINE.
4. CONTRACTOR SHALL PROVIDE (4) COPIES OF SUBMITTALS FOR ALL FIXTURES AND EQUIPMENT INSTALLED ON THE PROJECT, INCLUDING BUT NOT LIMITED TO: PLUMBING FIXTURES, VALVES, PIPING, VALVES, HANGERS, INSULATION AND FITTINGS.
5. ALL WORK SHALL BE IN ACCORDANCE WITH ALL PERTINENT CODES AND REGULATIONS, LOCAL AND STATE. CONTRACTOR SHALL BE RESPONSIBLE FOR ALL COSTS OF PERMITTING AND PAYMENT OF ALL UTILITY CHARGES FOR INSTALLATION/CONNECTION/ON-SITE CONSTRUCTION FOR WORK REQUIRED.
6. NEW PLUMBING FIXTURES SHALL BE AS SCHEDULED OR AN EQUIVALENT BY ONE OF THE FOLLOWING MANUFACTURERS: AMERICAN STANDARD, KOHLER, ELKAY, CRANE, ZURN, JOSAM, WADE OR FIAT. ALL FIXTURES SHALL BE FURNISHED WITH ALL HARDWARE REQUIRED FOR WALL OR FLOOR MOUNTING.
7. ALL INDIRECT WASTE SHALL TERMINATE WITH AN AIR GAP OF TWICE THE PIPE DIAMETER ABOVE THE FLOOD LEVEL OF THE FIXTURE.
8. PIPING FROM WATER HEATER TEMPERATURE AND PRESSURE RELIEF SHALL TERMINATE AS INDIRECT WASTE OR OUTSIDE AS SHOWN WITH ELBOW DOWN. PIPING SHALL BE SAME SIZE AS P & T VALVE AND SHALL BE GALVANIZED STEEL OR COPPER. LOCATE TERMINATION AWAY FROM PERSONNEL.
9. ALL PLUMBING EQUIPMENT SUCH AS WATER HEATERS, PUMPS, STORAGE TANKS, OR MIXING VALVES SHALL BE PROVIDED WITH A NAMEPLATE, MATCHING THE TAG ON THE DRAWINGS. NAME PLATE SHALL BE CORROSION-PROOF AND WITH LETTERS MINIMUM OF 1/2" TALL. LABELS SHALL BE BY SETON, OR APPROVED EQUAL AND SHALL MATCH ANSI Z535.
10. ALL PIPING AND EQUIPMENT SHALL BE SUPPORTED BY STRUCTURAL BEAMS, JOISTS AND/OR COLUMNS ONLY.
11. CONDENSATE DRAINS WITHIN BUILDING SHALL BE INSULATED WITH 3/4" THICK ARMAFLEX, CONTINUOUSLY FROM AIR CONDITIONING UNIT TO TERMINATION POINT.
12. ALL EQUIPMENT AND DEVICES INSTALLED ABOVE A HARD CEILING OR WITHIN WALL SHALL HAVE AN ACCESS PANEL LARGE ENOUGH TO REMOVE AND REPLACE EQUIPMENT OR DEVICE. PANEL SHALL BE SUBJECT TO APPROVAL BY ARCHITECT.
13. ALL NON-METALLIC PIPE BELOW GRADE SHALL BE INSTALLED WITH DETECTABLE TYPE TAPE 6" ABOVE IT.
14. CONTRACTOR SHALL PROVIDE (2) COPIES OF AS-BUILT DRAWINGS TO OWNER AFTER ACCEPTANCE OF PROJECT.

DOMESTIC WATER PIPING AND FITTINGS

1. DOMESTIC (POTABLE) COLD WATER PIPING BELOW GROUND/SLAB SHALL BE SOFT COPPER TUBE, ASTM B 88, TYPE "K" COPPER WATER TUBE, LEAD FREE SOLDER JOINTS, ANNEALED TEMPER. FITTINGS SHALL BE ASME B16.18, CAST COPPER ALLOY OR ASME B16.22, WROUGHT-COPPER, SOLDER JOINT FITTINGS. FITTINGS SHALL NOT BE USED UNDER THE BUILDING SLAB. 314 STAINLESS STEEL IS ALLOWED AS A TYPE OF PIPE MATERIAL WITH WELDED OR MECHANICAL JOINTS. PIPING SHALL BE PRESSURE TESTED 50 PSIG ABOVE OPERATING PRESSURE WITHOUT EXCEEDING THE PRESSURE RATING OF THE PIPING SYSTEM MATERIALS. TEST SOURCE SHALL BE ISOLATED AND ALLOWED TO STAND FOR FOUR HOURS. ANY LEAKS AND LOSS IN TEST PRESSURE CONSTITUTE DEFECTS THAT MUST BE REPAIRED.

   CONTRACTOR SHALL PURGE NEW PIPING AND PARTS OF EXISTING DOMESTIC WATER PIPING THAT HAVE BEEN ALTERED, EXTENDED, OR REPAIRED BEFORE USING. USE PURGE AND DISINFECTING PROCEDURES PRESCRIBED BY AUTHORITIES HAVING JURISDICTION (AHJ) OR, IF METHODS ARE NOT PRESCRIBED, PROCEDURES DESCRIBED IN EITHER AWWA C651 OR AWWA C652.

   VALVES FOR POTABLE WATER SHALL BE BRONZE OR STAINLESS STEEL BY WATTS, WOODFORD, STOCKHAM, KITZ OR APPROVED EQUAL. PROVIDE WATER HAMMER ARRESTORS BY WADE, PPS, ZURN, OR APPROVED EQUAL. LOCATE WATER HAMMER ARRESTORS IN STRICT ACCORDANCE WITH MANUFACTURER'S RECOMMENDATIONS.
2. HARD DRAWN COPPER TUBE, ASTM B88, TYPE "L" WATER TUBE, DRAWN TEMPER. FITTINGS SHALL BE CAST COPPER ALLOY, ASTM B16.18 OR WROUGHT COPPER, ASTM B16.22 SOLDER FITTINGS. PROVIDE SHUTOFF VALVE ON EACH WATER SUPPLY TO EQUIPMENT AND ON EACH WATER SUPPLY TO PLUMBING FIXTURES WITHOUT SUPPLY STOPS. USE BAL VALVES FOR PIPING NPS 2" AND SMALLER.
3. POTABLE HOT WATER PIPING SHALL BE INSULATED WITH A MINIMUM 1" OF FIBERGLASS. POTABLE COLD WATER SHALL BE INSULATED WITH 1/2" THICK ARMAFLEX OR FIBERGLASS INSULATION. IF THE INSULATED PIPING PASSES THROUGH A WALL, CEILING OR FLOOR, THE INSULATION SHALL BE CONTINUOUS THROUGHOUT THE PENETRATION. PIPING INSULATED INDOORS SHALL HAVE A WHITE, ALL-SERVICE JACKET. PIPING INSULATED OUTDOORS SHALL HAVE AN EMBOSSED ALUMINUM JACKET. HORIZONTAL PORTIONS OF RAIN LEADERS SHALL BE INSULATED WITH 1" THICK ARMAFLEX OR 1-1/2" THICK FOAM GLASS. EXPOSED WASTE LINES BELOW HANDICAPPED FIXTURES SHALL BE INSULATED WITH 3/4" THICK ARMAFLEX.
4. ALL HANDSINKS IN KITCHENS AND LAVATORIES IN RESTROOMS SHALL BE PROVIDED WITH A THERMOSTATIC MIXING VALVE CONFORMING TO ASSE 1016, ASSE 1062, OR ASSE 1070 (AS REQUIRED BY APPLICATION) SET TO SUPPLY TEMPERED WATER AT 110f, U.N.O.
5. PROVIDE REDUCED PRESSURE BACKFLOW PREVENTER (RPZ) CONFORMING TO ASSE 1013 ON MAIN WATER SERVICE. (TESTING SHALL BE PERFORMED BY BACKFLOW PREVENTION ASSEMBLY TESTER REGISTERED/LICENSED BY CITY.)
6. PROVIDE RPZ AT SUPPLY OF WATER FILTERS, COFFEE & TEA BREWERS, CARBONATED DRINK DISPENSERS CONFORMING TO ASSE 1022. STAINLESS STEEL RPZ SHALL BE USED ON CARBONATED AND OTHER CORROSIVE LIQUIDS. DO NOT USE COPPER PIPE DOWNSTREAM OF SS RPZ FOR CARBONATED LIQUIDS. PROVIDE RZ (OR ATMOSPHERIC VACUUM BREAKER ON HOSE BIBB IF ACCEPTABLE BY A.H.J.) ON WATER INJECTED SOAP DISPENSERS. ROUTE DRAIN FROM RPZ'S TO NEAREST FLOOR SINK OR APPROVED LOCATION.
7. PROVIDE PRESSURE REDUCING VALVES CONFORMING TO ASSE 1003 FOR ALL HOT AND COLD WATER PIPES SERVING EQUIPMENT IF PRESSURE EXCEEDS 80 PSI DOWNSTREAM OF RPZ ON MAIN.

WASTE AND VENT PIPING SYSTEMS

1. ALL WASTE AND VENT PIPING ABOVE GRADE/SLAB SHALL BE CAST IRON HUB AND SPIGOT (ASTM A 888, ASTM C 1277, ASTM C 564), CAST IRON NO-HUB WITH STAINLESS STEEL COUPLINGS, OR SOLID WALL SCHEDULE 40 PVC. WHERE NOT OTHERWISE SPECIFIED THROUGHOUT THE DRAWING SET, WASTE DRAIN AND VENT PIPING SHALL BE PER LOCAL CODE AND AUTHORITY HAVING JURISDICTION. PLASTIC PIPING IS NOT ALLOWED IN A RETURN AIR PLENUM. PIPING BELOW GRADE SHALL BE CAST IRON HUB AND SPIGOT, NO-HUB (LISTED FOR UNDERGROUND USE), OR DWV PVC. ROUGHING-IN PLUMBING TEST PROCEDURE: TEST DRAINAGE AND VENT PIPING, EXCEPT OUTSIDE LEADERS, ON COMPLETION OF ROUGHING-IN. CLOSE OPENINGS IN PIPING SYSTEM AND FILL WITH WATER TO POINT OF OVERFLOW, BUT NOT LESS THAN 10-FOOT HEAD OF WATER. FROM 15 MINUTES BEFORE INSPECTION STARTS TO COMPLETION OF INSPECTION, WATER LEVEL SHALL NOT DROP. INSPECT JOINTS FOR LEAKS. REPAIR ALL LEAKS AND TEST AGAIN. MINIMUM SLOPE OF SANITARY WASTE PIPING = 1/8" PER FOOT.
2. WASTE PIPE BELOW GROUND/SLAB WITHIN 5'-0" OF THE BUILDING SHALL BE PVC PIPE, ASTM D 2665, SOLID WALL DRAIN, WASTE, AND VENT PATTERNS.
3. TEST SANITARY DRAINAGE AND VENT PIPING ACCORDING TO PROCEDURES OF AUTHORITIES HAVING JURISDICTION.
4. EACH PLUMBING VENT AND/OR SOIL STACK PROJECTING ABOVE THE ROOF SHALL BE FLASHED WITH STANDARD MANUFACTURED FLASHINGS. FLASHING SHALL BE SHEET METAL WITH RUBBER GASKETS. FLASHING SHALL EXTEND INTO ROOFING A MINIMUM OF 12" OR DISTANCE SPECIFIED BY LOCAL CODE. PAINT VENT PIPING EXPOSED ON ROOF BLACK OR AS DIRECTED BY THE ARCHITECT.

CONDENSATE DRAINAGE PIPING

1. ABOVE GROUND, CONDENSATE DRAINAGE PIPING AND COPPER DWV TUBE: ASTM B 306, DRAINAGE TUBE, DRAWN TEMPER, COPPER DRAINAGE FITTINGS: ASME B16.23, CAST COPPER OR ASME B16.29, WROUGHT COPPER, SOLDER JOINT FITTING.

GAS PIPING

1. GAS PIPING OUTSIDE ABOVE GRADE, SHALL BE BLACK STEEL, SCHEDULE 40, ASTM A53, WITH MALLEABLE THREADED FITTINGS FOR 2" AND SMALLER, AND WITH WELDED JOINTS FOR 2-1/2" AND LARGER.
2. BELOW GRADE OUTSIDE BUILDING, GAS PIPING MAY BE HIGH DENSITY POLYETHYLENE (HDPE) PIPE WITH HEAT FUSION FITTINGS CONFORMING TO ASTM D2513 IF PERMITTED BY A.H.J.. INSTALLATION SHALL CONFORM TO LOCAL CODE AND UTILITY COMPANY REQUIREMENTS. PROVIDE PLASTIC PIPE W/ TRACER WIRE.
3. CONNECTION, FITTINGS, ETC. SHALL BE SAME WEIGHT AS PIPE AND EQUAL TO PRODUCTS OF CRANE COMPANY. VALVES SHALL CONFORM TO ASME B16.33. ONE INCH AND SMALLER VALVES SHALL BE LEVER HANDLE. LARGER VALVES SHALL BE RON BODY WITH BRONZE SQUARE HEAD PLUG. PROVIDE OPERATING WRENCH WITH EACH VALVE. PROVIDE UNIONS AT EACH CONNECTION TO EQUIPMENT. DO NOT INSTALL UNIONS ELSEWHERE.
4. PROVIDE UL LISTED CORRUGATED, FLEXIBLE GAS CONNECTIONS TO WATER HEATERS AND COOKING EQUIPMENT CONFORMING TO ANSI Z21.24. PROVIDE RIGID CONNECTIONS TO ALL OTHER EQUIPMENT AND APPLIANCES AND WHERE LOCAL CODE PROHIBITS THE USE OF FLEXIBLE CONNECTIONS. OUTDOOR CONNECTORS SHALL BE LISTED FOR OUTDOOR USE.
5. INSTALL HANGERS FOR HORIZONTAL STEEL PIPING WITH THE FOLLOWING MAXIMUM SPACING AND MINIMUM ROD SIZES:
   A. 1/2 INCH NPS: MAXIMUM SPAN, 72 INCHES; MINIMUM ROD SIZE, 3/8 INCH.
   B. 3/4 INCH TO 1 INCH NPS: MAXIMUM SPAN OF 96 INCHES; MINIMUM ROD SIZE OF 3/8 INCH.
   C. 1-1/4 INCH TO 2 INCH NPS: MAXIMUM SPAN OF 108 INCHES; MINIMUM ROD SIZE OF 3/8 INCH.
   D. 2-1/2 INCH TO 3-1/2 INCH NPS: MAXIMUM SPAN OF 10 FEET; MINIMUM ROD SIZE OF 1/2 INCH.
6. GAS VALVE STOPS 2 INCH NPS AND SMALLER SHALL BE AGA-CERTIFIED, BALL TYPE WITH CHROME-PLATED BRASS BALL, FOR 2 PSIG OR LESS NATURAL GAS. INCLUDE AGA STAMP, FLAT OR SQUARE HEAD OR LEVEL HANDLE, AND THREADED ENDS CONFORMING TO ASME B1.201
7. SOLENOID VALVES: BRONZE, ALUMINUM, OR CAST-IRON BODY; 120 VAC, 60 HZ, CLASS B CONTINUOUS DUTY MOLDED COIL; UL LABELED AND FM APPROVED. INCLUDE NEMA ISC 6, TYPE 4, COIL ENCLOSURE AND ELECTRICALLY OPENED AND CLOSED DUAL COILS. VALVE POSITION IS NORMALLY CLOSED. INCLUDE THREADED ENDS CONFORMING TO ASME B1.20.1 FOR 2 INCH NPS AND SMALLER AND FLANGED ENDS FOR 2-1/2 INCH NPS AND LARGER.
8. EXTEND NATURAL GAS PIPING AND CONNECT TO GAS DISTRIBUTION SYSTEM (GAS SERVICE) PIPING IN LOCATION AND SIZE INDICATED FOR GAS SERVICE ENTRANCE TO BUILDING. GAS DISTRIBUTION SYSTEM PIPING, SERVICE PRESSURE REGULATOR, AND GAS METER WILL BE PROVIDED BY GAS UTILITY.
9. INSTALL SHUTOFF VALVE DOWNSTREAM FROM GAS METER, OUTSIDE BUILDING AT GAS SERVICE ENTRANCE.
10. INSTALL DRIPS AT POINTS WHERE CONDENSATE MAY COLLECT. INCLUDE OUTLETS OF GAS METERS. LOCATE WHERE READILY ACCESSIBLE TO PERMIT CLEANING AND EMPTYING. DO NOT INSTALL WHERE CONDENSATE WOULD BE SUBJECT TO FREEZING.
11. ALL EQUIPMENT CONNECTIONS SHALL BE PRECEDED BY A MANUAL STOP COCK.
12. PROVIDE SWING CONNECTIONS THROUGHOUT THE SYSTEM TO ALLOW FOR ADEQUATE HORIZONTAL AND VERTICAL EXPANSION AND CONTRACTION. UNIONS OF COMPANION FLANGES SHALL BE PROVIDED FOR REMOVAL OF EQUIPMENT.
13. INSTALL UNIONS IN PIPES 2" NPS AND SMALLER, ADJACENT TO EACH VALVE AT FINAL CONNECTION TO EACH PIECE OF EQUIPMENT AND ELSEWHERE AS INDICATED. UNIONS ARE NOT REQUIRED ON FLANGED DEVICES.
14. INSTALL STRAINERS ON SUPPLY SIDE OF EACH CONTROL VALVE, GAS PRESSURE REGULATOR, SOLENOID VALVE, AND WHERE INDICATED ON THE DRAWINGS.
15. INSTALL DIELECTRIC FITTINGS (UNIONS AND FLANGES) WITH FERROUS AND BRASS OR BRONZE END CONNECTIONS, SEPARATED BY INSULATING MATERIAL, WHERE PIPING OF DISSIMILAR METALS ARE JOINED.
16. INSTALL VENT PIPING FOR GAS PRESSURE REGULATORS AND GAS TRAINS. EXTEND OUTSIDE BUILDING AND VENT TO ATMOSPHERE TERMINATE VENTS WITH TURNED-DOWN REDUCING ELBOW FITTINGS WITH CORROSION RESISTANT INSECT SCREENS IN LARGE END.
17. INSTALL GAS VALVE UPSTREAM FROM AND WITHIN 72 INCHES OF EACH APPLIANCE USING GAS. INSTALL UNION OR FLANGED CONNECTION DOWNSTREAM FROM VALVE. INCLUDE FLEXIBLE CONNECTORS WHEN INDICATED.
18. GAS PIPING EXPOSED ON THE ROOF MUST BE PAINTED WITH RUST-INHIBITING PAINT.
19. GAS PIPING PENETRATING ANY EXTERIOR WALL OR ROOF SHALL BE ROUTED WITHIN A VENTED STEEL SLEEVE. WHERE GAS PIPING CONNECTS TO APPLIANCE, PROVIDE A MINIMUM 6" LONG DIRT LEG. OTHER PIPING PENETRATING EXTERIOR WALLS SHALL BE PROVIDED WITH STEEL SLEEVES BUT NOT VENTED.
20. ALL GAS PIPING WITHIN THE BUILDING SHALL HAVE WELDED OR BRAZED JOINTS. PIPING SHALL BE IN ACCORDANCE WITH ALL PERTINENT CODES AND REGULATIONS, LOCAL AND STATE.
21. ALL EXPOSED GAS PIPING SHALL BE PAINTED WITH TWO (2) COATS (MINIMUM) OF YELLOW EPOXY PAINT. AFTER PAINTING, PROVIDE LABELS AS PER ANSI.

WATER HEATERS

1. INSTANTANEOUS ELECTRIC WATER HEATERS, THERMOSTAT CONTROL: COMPLY WITH UL 1453 FOR TANK TYPE ELECTRIC WATER HEATER HEATING APPLIANCE. CONSTRUCTION SHALL INCLUDE COPPER PIPING OR TUBING COMPLYING WITH NSF 61 BARRIER MATERIALS FOR POTABLE WATER, WITHOUT STORAGE CAPACITY. PRESSURE RATING OF 150 PSIG. ELECTRICAL RESISTANCE HEATING SYSTEM. TEMPERATURE CONTROL SHALL BE THERMOSTATIC. PROVIDE WITH HIGH TEMPERATURE LIMIT CUTOFF DEVICE OR SYSTEM.
   A. RELIEF VALVE: ASME RATED AND STAMPED AND COMPLYING WITH ASME PTC 25.3 FOR COMBINATION TEMPERATURE AND PRESSURE RELIEF VALVES. INCLUDE RELIEVING CAPACITY AT LEAST AS GREAT AS HEAT INPUT, AND INCLUDE PRESSURE SETTING LESS THAN WATER HEATER WORKING PRESSURE RATING. SELECT RELIEF VALVE WITH SENSING ELEMENT THAT EXTENDS INTO STORAGE TANK.
2. WATER HEATER SHALL BE BY UNIT SPECIFIED OR BY A.O. SMITH, BRADFORD WHITE, CHRONOMITE, EEMAX, LOCHINVAR, RINNAI, RHEEM, OR RUDD.

INSULATION

1. PIPE INSULATION SHALL BE EQUAL TO OWENS CORNING FIBERGLASS "ASJ/SSL" OR JOHNS MANVILLE "MICRO-LOK" HAVING ALL SERVICE JACKET. PROVIDE PLASTIC JACKET OUTDOORS AND WHERE EXPOSED TO PHYSICAL DAMAGE.
2. MINERAL FIBER, PIPE INSULATION: PREFORMED PIPE INSULATION COMPLYING WITH ASTM C 547, TYPE I, GRADE A, WITH ABSORBENT CLOTH FACTORY APPLIED TO THE ENTIRE INSIDE SURFACE OF PREFORMED PIPE INSULATION AND EXTENDED THROUGH LONGITUDINAL JOINT TO OUTSIDE SURFACE OF INSULATION UNDER INSULATION JACKET. FACTORY APPLY A WHITE, POLYMER, VAPOR RETARDER JACKET WITH SELF SEALING ADHESIVE TAPE SEAM AND EVAPORATION HOLES RUNNING CONTINUOUSLY ALONG THE LONGITUDINAL SEAM, EXPOSING THE ABSORBENT CLOTH.
3. INSULATE ALL HOT AND COLD WATER PIPING WITH 1" THICK PIPE INSULATION. ALL WATER PIPING INSTALLED IN EXTERIOR WALLS OR IN ATTIC SPACES SHALL BE INSTALLED TO THE HEATED SIDE OF THE WALL OR ATTIC INSULATION. ALL WATER PIPING SUBJECT TO FREEZING TEMPERATURES SHALL BE INSULATED SUFFICIENTLY TO PREVENT FREEZING OF PIPING AS INDICATED PER DETAILS.
4. ALL DOMESTIC COLD WATER PIPING AND CONDENSATE DRAINS SHALL BE INSULATED WITH 1/2" FIBERGLASS. ALL HOT WATER PIPING SHALL BE INSULATED WITH 1" FIBERGLASS (CONDUCTIVITY LESS THAN 0.27 BTU/(IN*HR*FT2*F)). COMPLY WITH APPLICABLE ENERGY CODE.
5. INTERIOR HORIZONTAL ROOF DRAINS AND LEADERS SHALL BE INSULATED WITH 1/2" FIBERGLASS.

MISCELLANEOUS

1. HEAT TRACE SHALL BE EQUAL TO RAYCHEM/TYCO #5XL-1-CR, 5 W/FT AT 120V AND 40F START-UP. PROVIDE INSULATION AS SPECIFIED ELSEWHERE, OR A MINIMUM OF $\frac{1}{2}$" (FIBERGLASS WITH ASJ) OVER HEAT TRACE AND DRAIN LINE.
2. CONTRACTOR SHALL SNAKE ALL DRAIN LINES AND SANITARY SEWER LINES PRIOR TO APPLYING FOR FINAL PAYMENT.
3. PROVIDE DIELECTRIC UNIONS TO SEPARATE DISSIMILAR MATERIAL PIPES AND WHERE SHOWN FOR EQUIPMENT REMOVAL.
4. ALL WATER PIPING AND SEWERS SHALL BE PROPERLY TESTED TO THE SATISFACTION OF THE A.H.J.
5. TRENCHES SHALL BE BACK-FILLED WITH CLEAN SOIL BY TAMPING OR PUDDING IN 6" INCREMENTS. NO PIPE SHALL BE LESS THAN 12" BELOW GRADE.

THIS DRAWING AND ITS CONTENTS ARE THE COPYRIGHTED PROPERTY OF GHA ARCHITECTS USE THEREOF IS LIMITED TO THE SPECIFIC PROJECT AND SITE SET FORTH ABOVE, AND MAY NOT BE OTHERWISE USED OR REPRODUCED, IN WHOLE OR IN PART, WITHOUT THE WRITTEN PERMISSION OF GHA ARCHITECTS, THE ARCHITECT. THIS DRAWING IS TO BE RETURNED UPON REQUEST.

GHA
Architecture / Development
14901 Quorum Drive
Suite 300
Dallas Texas 75254
Ph: (972) 239-8884
Fax: (972) 239-5054

STATE OF MICHIGAN
GRANT REID CLAUSSEN
License No. 6201309682
LICENSED PROFESSIONAL ENGINEER

12-17-2021

GHC ENGINEERS
Engineering Firm : F-21834
GHC Engineers, LLC
14901 Quorum Dr, Ste 300
Dallas, Texas 75254
Office: 972-239-8884
gclaussen@ghcengineers.com
Project # G21-0959.001

EST. 1998 SCOOTER'S COFFEE

PROJECT ADDRESS:
1490 WEST ANN ARBOR ROAD
PLYMOUTH, MI 48170

REVISIONS:

TITLE:
PLUMBING SPECS

DATE:
09/16/2021

PROJECT NO.
210536

- [ ] DESIGN DEVELOPMENT
- [x] PERMIT SUBMITTAL
- [ ] BID PACKAGE
- [ ] CONSTRUCTION ISSUE

SHEET NO.
P1.01

PIPING SYMBOLS

SANITARY

- GRADE CLEANOUT (GCO)
- FLOOR CLEANOUT (FCO)
- DOUBLE YARD CLEANOUT (DYCO)
- FLOOR DRAIN (FD)
- FLOOR SINK (FS)
- WALL CLEANOUT (WCO)
- PIPE CLEANOUT (CO)
- SANITARY WYE
- SANITARY CROSS

DRAWINGS SYMBOLS

- FLOW ARROW
- 1% SLOPE DIRECTION AND DEGREE
- CONNECT TO EXISTING
- K KITCHEN EQUIPMENT TAG

PIPING

- 90° ELBOW DOWN
- 90° ELBOW UP
- TEE DOWN
- TEE UP
- UNION
- CAP
- CONTINUATION

ACCESSORIES

- M GAS METER
- R GAS PRESSURE REGULATOR
- NON-FREEZE WALL HYDRANT
- NON-FREEZE ROOF HYDRANT
- ROOF DRAIN (RD)
- OVERFLOW ROOF DRAIN (ORD)
- ROOF DRAIN NOZZLE
- PUMP

VALVES

- BALL VALVE
- PLUG VALVE
- THERMOSTATIC MIXING VALVE
- GATE VALVE
- GLOBE VALVE
- GAS STOP
- ANGLE VALVE
- BUTTERFLY VALVE (HORIZONTAL)
- BUTTERFLY VALVE (VERTICAL)
- SOLENOID VALVE
- PRESSURE REDUCING VALVE
- VALVE BOX
- CHECK VALVE

ABBREVIATIONS

CD	CONDENSATE	MS	MOP SINK
CO	CLEANOUT	MV	MIXING VALVE
CP	CIRCULATION PUMP	NFRH	NON FREEZE ROOF HYDRANT
CW	COLD WATER	NFWH	NON FREEZE WALL HYDRANT
CWF	COLD WATER FILTERED	ORD	OVERFLOW ROOF DRAIN
DB	DRYER BOX	PT	PLASTER TRAP
ES	EMERGENCY SHOWER	RD	ROOF DRAIN
EW	EYE WASH	RPZ	REDUCED PRESSURE ZONE BACKFLOW PREVENTER
EWC	ELECTRIC WATER COOLER	SHWR	SHOWER
FCO	FLOOR CLEANOUT	SP	SUMP PUMP
FD	FLOOR DRAIN	SS	SANITARY SEWER
FS	FLOOR SINK	TW	TEMPERED WATER
GCO	GRADE CLEANOUT	TWCO	TWO WAY CLEANOUT
GW	GREASE WASTE	TWR	TEMPERED WATER RETURN
HW	HOT WATER	UR	URINAL
HWR	HOT WATER RETURN	WC	WATER CLOSET
IMB	ICE MACHINE BOX	WCO	WALL CLEANOUT
LAV	LAVATORY	WH	WATER HEATER
HB	HOSE BIBB	WMB	WASHING MACHINE BOX

PIPING LEGEND

- COLD WATER (CW)
- HOT WATER (HW)
- WASTE PIPING (W)
- VENT (V)
- GW GREASE WASTE (GW)
- CD CONDENSATE DRAIN (CD)
- G GAS PIPING (G)
- RD ROOF DRAIN PIPING (RD)
- (E) EXISTING PIPING (E)

PLUMBING PIPE MATERIAL SCHEDULE

PIPING SYSTEM	ABBREVIATION	PIPING MATERIAL
SANITARY WASTE AND VENT PIPING BELOW GRADE	SW OR V	HUBLESS CAST IRON (PVC DWV OPTIONAL)
SANITARY WASTE AND VENT ABOVE GRADE	SW OR V	SERVICE WEIGHT CAST IRON (PVC DWV OPTIONAL)
WATER PIPING BELOW GRADE	CW, HW, OR HWR	TYPE L HARD DRAWN COPPER WITH SOLDERED JOINTS
WATER PIPING ABOVE GRADE	CW, HW, OR HWR	TYPE K SOFT ANNEALED COPPER
CONDENSATE DRAIN PIPING - 1" AND SMALLER	CD	TYPE M HARD DRAWN COPPER (PVC DWV OPTIONAL)
CONDENSATE DRAIN PIPING - 1-1/4" AND LARGER	CD	TYPE DWV HARD DRAWN COPPER (PVC DWV OPTIONAL)
INDIRECT DRAIN - 1" AND SMALLER	ID	TYPE M HARD DRAWN COPPER
INDIRECT DRAIN - 1-1/4" AND LARGER	ID	TYPE DWV HARD DRAWN COPPER

KITCHEN FIXTURE CONNECTION SCHEDULE

MARK	FIXTURE/ EQUIPMENT	FILTERED WATER (RO SYSTEM) (IN)	COLD WATER (IN)	HOT WATER (IN)	WASTE	
					INDIRECT	DIRECT
2	ICE MAKER	1/2"			1-1/2"	
6	COFFEE MAKER	1/2"				
9	ESPRESSO MACHINE	1/2"				
10	3-COMPARTMENT SINK		3/4"	3/4"	3"	
24	MOP SINK		3/4"	3/4"		3"
27	DIPPER WELL		3/8"			
28	RINSE SINK		3/8"		2"	
21.2	HAND SINK		1/2"	1/2"		2"
21	DUMP SINK		1/2"	1/2"		2"
42	WATER FILLER	1/2"			2"	

NOTES:
1. COORDINATE WITH KITCHEN DRAWINGS PRIOR TO INSTALLATION

OptiPure

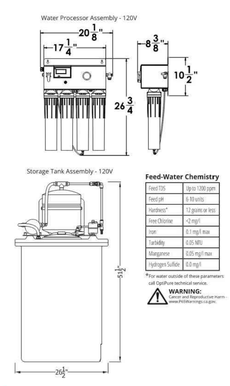

Feed-Water Chemistry

Feed TDS	50 to 130 ppm
Feed pH	6.78 units
Hardness*	12 ppm or less
Free Chlorine	<2 mg/l
Iron	0.1 mg/l max
Turbidity	0.05 NTU
Manganese	0.05 mg/l max
Hydrogen Sulfide	0.0 mg/l

*For water outside of these parameters call OptiPure technical service.

WARNING: Cancer and Reproductive Harm – www.P65Warnings.ca.gov.

Warranty

All system components and assembly except for filter cartridges, separation membranes, permeate pumps, electric motors, diaphragm pumps, and rotary vane pumps shall be warranted against defects in workmanship for a period of 60 months from the date of original shipment. For complete warranty information, contact OptiPure customer service or go to www.optipurewater.com.

Dealer/Distributor Info:

Model: BWS350/50
Part #: 164-14375

Specifications

System	
Dimensions - Processor	26.8"h x 20.1"w x 8.4"d
Dimensions - Tank	51.5"h x 26.5"w
Connection - Feedwater	3/8" Push Fit Tubing
Operating Pressure Range	60 - 85 psi at 1.0 gpm (4.1 - 5.9 bar)
Inlet Water Temperature Range	40° - 100°F (4° - 38°C)
Shipping Weight	100 lbs.
Drain Connection	2.0 gpm Minimum Flow
Power - Water Processor	120V 60Hz 6W
Power - Repressurization Pump	120V 60Hz 2 Amps
Performance	
Typical TDS Rejection	>97%
Product Water Production (at 77°F, 60 psi Net Operating Pressure) Production rate is strictly dependent on feed water temperature and pressure.	350.0 gals./day 14.6 gals./hr 0.25 gpm
Blended Water Production	Up to 400 gpd

Replacement Media

Model	Description	Part Number	Qty
CTO-Q	Pre-Filter	300-05830	2
AMS-QT	Membrane	204-53040	1
MA-Q15	Post-Filter	300-05855	1

Options

Model	Description	Part Number
Air-Gap Kit	Approved Air-Gap Kit for Drain Line	164-89905
QTPT-1	CTO Post-Treatment	160-52120
BPS-QT	Feed Water Booster Pump	164-85020
FXPT-11CR	Chloramine Reduction System	160-50011
PRV	Pressure Reducing Valve	164-89938
Remote Kit	Repressurization/Storage Tank Assembly remote kit	164-89116

It is recommended that pre/post-filters and mineral addition cartridges are changed every 6 months, when capacity is reached or when feedwater pressure or flow becomes inadequate.

Membrane life varies depending on feedwater conditions and pre-filter maintenance. Typically 12-18 months under typical conditions, but it can be as long as 3-5 years.

This product is for commercial use only and must be installed and maintained according to manufacturer's guidelines.

Do not use on water that is microbiologically unsafe or of unknown quality without adequate disinfection before or after the system.

OptiPure, A Division of Aquion, Inc.
101 S. Gary Ave., Suite A
Roselle, IL 60172
p: 972.881.9797 e: info@optipure.net
www.optipurewater.com

BWS350/50_Spec_R7
011319

PLUMBING SCHEDULE

MARK	FIXTURE	MAX GPM/GPF	CW	HW/TW	WASTE	VENT	DESCRIPTION
LAV	WALL-HUNG LAVATORY	0.5	1/2"	1/2"	3"	2"	FIXTURE: TOTO: #LT307 21"x18-1/4" WALL HUNG LAVATORY, WHITE VITREOUS CHINA FIXTURE WITH FAUCET LEDGE AND FRONT OVERFLOW. SINGLE HOLE FAUCET: CHICAGO FAUCET: #802-VE2805XKCP, 4" CENTERSET, VANDAL RESISTANT FAUCET WITH #390 LEVER HANDLES, CERAMIC QUARTER TURN CARTRIDGES AND #E2805 0.5 GPM AERATOR
WC	WATER CLOSET	1.5	1"		4"	2"	TBD
FS-1	FLOOR SINK				3"	2"	SIOUX CHIEF 861, PVC BODY WITH SCH 40 HUB CONNECTION, PVC STRAINER
FD-1	FLOOR DRAIN				3"	2"	ZURN # FD2210, PVC OR ABS BODY, ADJUSTABLE NICKEL BRONZE HEAD AND SECURED GRATE
TP	TRAP PRIMER						FIXTURE: McGUIRE *8902 / SUPPLIES: McGUIRE *2165CC.
WHA	WATER HAMMER ARRESTOR				1/2"	2"	PROVIDE AND INSTALL AT ALL FAST CLOSING VALVES, INCLUDING FLUSH VALVES, AND AT ENDS OF FIXTURE RUNS.
GI	GREASE INTERCEPTOR					3"	SCHIER: GB2 50 GPM 127.6 LBS
TS	TRAP SEAL						ProSet SYSTEMS 'GRAP GUARD" INSERT FOR ACTUAL FLOOR DRAIN MODEL AND SIZE PROVIDED, FLEXIBLE ELASTOMERIC PVC MATERIAL MOLDED INTO SHAPE OF DUCK'S BILL, OPEN ON TOP WITH CURL CLOSURE AT BOTTOM. ALLOWS WASTEWATER TO OPEN AND ADEQUATELY DISCHARGE FLOOR DRAIN THROUGH ITS INTERIOR. CLOSES AND RETURNS TO ORIGINAL MOLDED SHAPE AFTER WASTEWATER DISCHARGE IS COMPLETE.
WCO	WALL CLEANOUT						SIOUX CHIEF (873 SERIES, BRASS COUNTERSUNK PLUG, 20 GAUGE STAINLESS STEEL COVER AND SCREW. CLEANOUT TEE TO BE PROVIDED SEPARATELY. REFER TO SPECIFICATIONS FOR INSTALLATION
FC	FLOOR CLEANOUT						ZURN CO2450--AB3 ADJUSTABLE FLOOR CLEANOUT, 3 INCH ABS HUB CONNECTION, 4" SIZE AVAILABLE. INSTALL PER MANUFACTURER'S RECOMMENDATIONS
RP	HOT WATER RE-CIRCULATION PUMP						GRUNDFOS: UP 15-10 BUC7 25W 1/25 HP
RPZ	REDUCED PRESSURE ZONE BACKFLOW PREVENTER						WATTS: #LF009QT-S, LEAD FREE CAST BRONZE BODY, QUARTER TURN TEST COCKS, QUARTER TURN BALL VALVES, BRONZE STRAINER, AND #909AG AIR GAP FITTING

NOTES:
1. ALL FIXTURES MAY BE SUBSTITUTED FOR APPROVED EQUALS.
2. NOT ALL FIXTURES USED ON ALL JOBS.
3. ALL FIXTURES - PROVIDE TRAP GUARDS OR TRAP PRIMERS WHERE REQUIRED BY LOCAL CODES AND/OR AHJ
4. G.C. SHALL VERIFY FIXTURE SPECIFICATIONS WITH ARCHITECT PRIOR TO ORDERING

TYP HOT WATER MAXIMUM PIPING LENGTHS

FIXTURE TYPE	HW/TW	MAXIMUM HOT WATER PIPING LENGTH FROM HEATING SOURCE
LAVATORY	1/2"	2'
MOP SINK	3/4"	21'
SINK	1/2"	43'
SHOWER	1/2"	43'
WASHING MACHINE BOX	1/2"	43'
EXTRACTOR	3/4"	43'

NOTES:
1. REFER TO 2018 INTERNATIONAL ENERGY CONSERVATION CODE TABLE C404.5.1 FOR MORE INFORMATION. SYSTEM SHALL COMPLY.
2. HEATING SOURCE REFERS TO CIRCULATING HOT WATER LOOP, TANK WATER HEATER OR INSTANTANEOUS WATER HEATER.

TANK-TYPE ELECTRIC WATER HEATER SCHEDULE

MARK	LOCATION	STORAGE CAPACITY (GALLON)	ELECTRICAL DATA			MANUFACTURER	MODEL NUMBER
			VOLTAGE	PHASE	MAX KW		
WH	ABOVE MOP SINK	40	208	1	8	AO SMITH	DEL-40

1. PROVIDE SHUT OFF VALVES ON HOT AND COLD WATER CONNECTIONS.
2. SET HEATER TO DELIVER WATER AT 140°F.
3. WATER HEATER SHALL BE WALL MOUNTED.

THERMOSTATIC MIXING VALVE SCHEDULE

MARK	MANUFACTURER	MODEL NUMBER	PRESSURE DROP	INLET HOT WATER		INLET COLD WATER		OUTLET TEMPERED WATER	
				TEMP	FLOW	TEMP	FLOW	TEMP	FLOW
TMV	WATTS	LFMMV-UT-M1	10 PSI	140 °F	.5 GPM	60 °F	.5 GPM	110 °F	1.0 GPM

1. BRONZE BODY THERMOSTATIC MIXING VALVE WITH INTEGRAL FILTER WASHERS AND CHECK VALVES AND ADJUSTMENT CAP WITH LOCKING FEATURE.
2. VALVE SHALL BE ASSEE 1016, 1017 AND1070 LISTED
3. IF VALVE SERVES WALL HUNG LAVATORY OR HAND SINK, LOCATE VALVE IN WALL DIRECTLY BEHIND A 12"X12" ACCESS PANEL WITH LOCKING COVER. COORDINATE LOCATION WITH ARCHITECT.
4. IF VALVE SERVES A COUNTERTOP LAVATORY, LOCATE VALVE BELOW LAVATORY WITHIN CABINET.
5. IF VALVE SERVES MULTIPLE LAVATORIES OR HAND SINKS, VALVE SIZE SHALL BE AS FOLLOWS: 1-2 LAVATORIES (1/2"), 3-4 LAVATORIES (3/4"), AND 5-6 LAVATORIES (1").

EXPANSION TANK

MARK	TANK VOLUME	MANUFACTURER	MODEL NUMBER	HEIGHT	DIA.	ASTME CONST
ET	N/A	AMTROL	ST-5	13"	8"	NO

RECIRCULATION PUMP SCHEDULE

MARK	SERVICES	GPM	TOTAL HEAD FT	MOTOR HP	ELECTRICAL DATA		
					VOLTAGE	PHASE	HERTZ
RP	120° HOT WATER	5	5	1/12	208	3	60

REMARKS:

BELL AND GOSSETT SERIES 100, BRONZE BODY W/ JOHNSON CONTROLS AQUASTAT MODEL A19DAC-1C, PLACE ABOVE WATER HEATER OR IN UTILITY ROOM WHER SPACE ALLOWS.

WATER HAMMER ARRESTOR

FIXTURE	#100	#200	#300	#400	#500
PDI UNITS	A	B	C	D	E
FIXTURE UNITS	1-11	12-32	33-60	61-113	114-154

1. WATER HAMMER ARRESTORS SHALL BE FURNISHED AND INSTALLED WHERE QUICK-CLOSING VALVES ARE UTILIZED. WATER HAMMER ARRESTORS SHALL CONFORM TO ASSE 1010
2. FLUSH-VALVE WATER CLOSETS = 10 FIXTURE UNITS.
3. FLUSH-VALVE URINAL = 5 FIXTURE UNITS.
4. LOCATE WATER HAMMER ARRESTOR BETWEEN LAST TWO FLUSH-VALVE FIXTURES.
5. WATER HAMMER ARRESTORS SHALL COMPLY WITH PDI-WH-201.
6. WATER HAMMER ARRESTORS SHALL BE PROVIDED WITH AN ACCESS DOOR UNLESS PROVIDED WITH A LIFETIME WARRANTY.

KITCHEN GREASE TRAP FLOW CALCULATION

NAME/TAG	TYPE	QTY	FLOW RATE (2 MIN/1 MIN)	DFU	DIMENSIONS	CAPACITY
#10	3 COMP SINK	1	7.36 GPM/14.73 GPM	6	6" X 18" X 14"	19.64 GPM
#24	MOP BASIN	1	3.12 GPM/6.23 GPM	3	20" X 16" X 6"	8.31 GPM
#32A	HAND SINK	1	2.05 GPM/4.09 GPM	3	10" X 14" X 9"	5.46 GPM
#33	DUMP SINK	1	1.82 GPM/3.64 GPM	3	10" X 14" X 6"	3.64 GPM
					TOTAL:	37.05 GPM

GHA
Architecture / Development
14901 Quorum Drive
Suite 300
Dallas Texas 75254
Ph: (972) 239-8884
Fax: (972) 239-5054

STATE OF MICHIGAN
GRANT REID CLAUSSEN
License No. 6201309682
LICENSED PROFESSIONAL ENGINEER

12-17-2021

GHC ENGINEERS
Engineering Firm : F-21834
GHC Engineers, LLC
14901 Quorum Dr, Ste 300
Dallas, Texas 75254
Office: 972-239-8884
gclaussen@ghcengineers.com
Project # G21-0959.001

EST. 1998 SCOOTER'S COFFEE

PROJECT ADDRESS:
1490 WEST ANN ARBOR ROAD
PLYMOUTH, MI 48170

REVISIONS:

TITLE:
PLUMBING NOTES & SCHEDULES

DATE:
09/16/2021

PROJECT NO.
210536

- [ ] DESIGN DEVELOPMENT
- [x] PERMIT SUBMITTAL
- [ ] BID PACKAGE
- [ ] CONSTRUCTION ISSUE

SHEET NO.
P1.02

THIS DRAWING AND ITS CONTENTS ARE THE COPYRIGHTED PROPERTY OF GHA ARCHITECTS USE THEREOF IS LIMITED TO THE SPECIFIC PROJECT AND SITE SET FORTH ABOVE, AND MAY NOT BE OTHERWISE USED OR REPRODUCED, IN WHOLE OR IN PART, WITHOUT THE WRITTEN PERMISSION OF GHA ARCHITECTS, THE ARCHITECT. THIS DRAWING IS TO BE RETURNED UPON REQUEST.

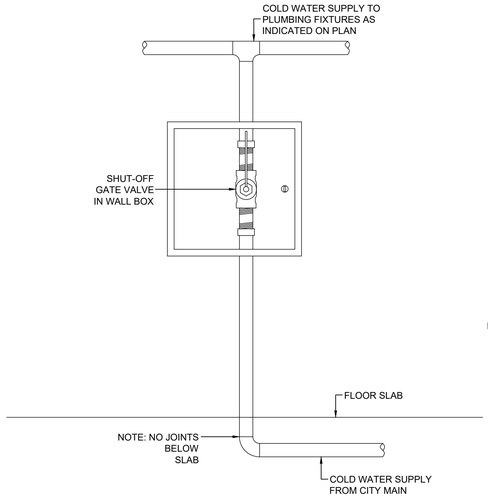

12 TYP WALL MOUNT ACCESS PANEL DETAIL
SCALE: N.T.S.

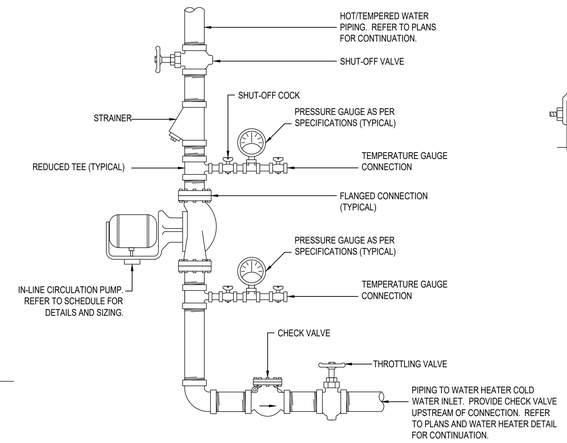

11 TYP IN-LINE CIRCULATING DETAIL
SCALE: N.T.S.

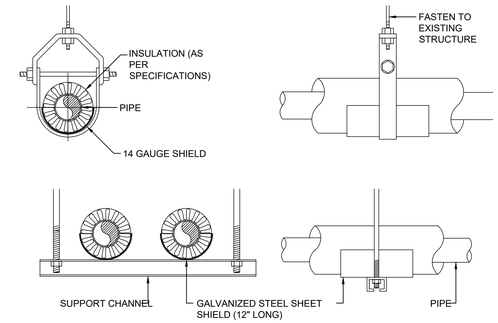

NOTES:
1. ATTACH SUPPORTS FOR ALL PIPING SUSPENDED FROM THE STEEL STRUCTURE.
2. VAPOR BARRIER SHALL BE CONTINUOUS AT ALL JOINTS.

10 TYP PIPE HANGER SUPPORT DETAIL
SCALE: N.T.S.

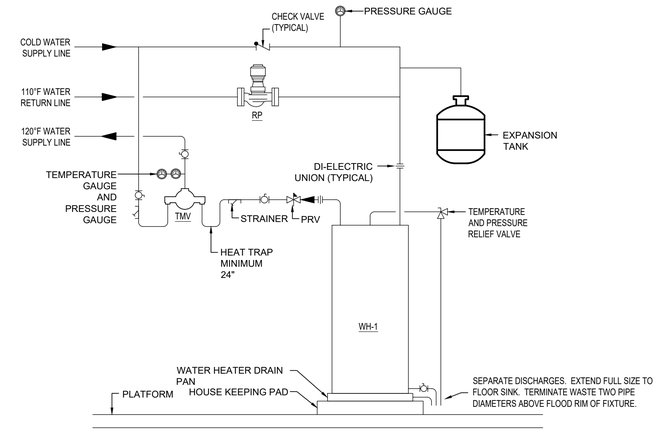

9 ELECTRIC WATER HEATER DETAIL
SCALE: N.T.S.

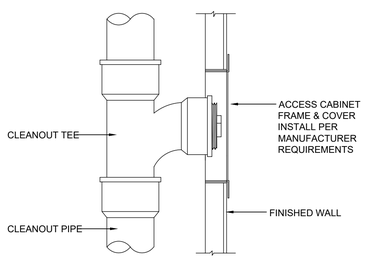

8 TYP WALL CLEANOUT DETAIL
SCALE: N.T.S.

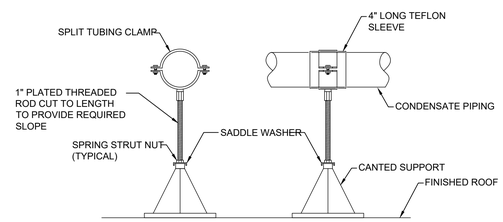

NOTES:
1. SPACE PIPE SUPPORTS AT 8'-0" MAXIMUM SPACING OR AS SPECIFIED.
2. PROVIDE RUBBER ISOLATION PAD AT CLAMP.

7 TYP ROOF PIPE SUPPORT DETAIL
SCALE: N.T.S.

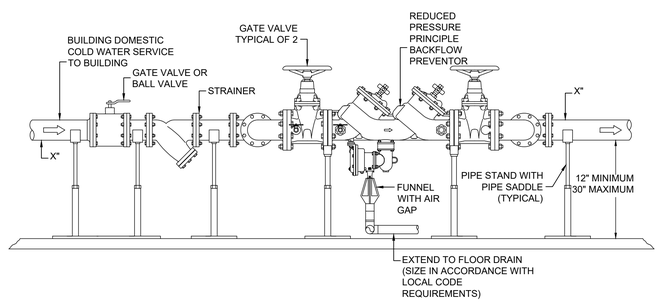

6 TYP REDUCED PRESSURE ZONE BACKFLOW PREVENTOR DETAIL (IF REQURED)
SCALE: N.T.S.

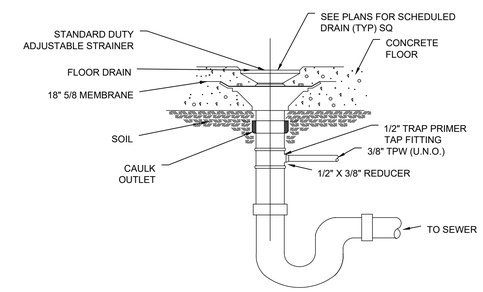

5 TYP FLOOR DRAIN DETAIL
SCALE: N.T.S.

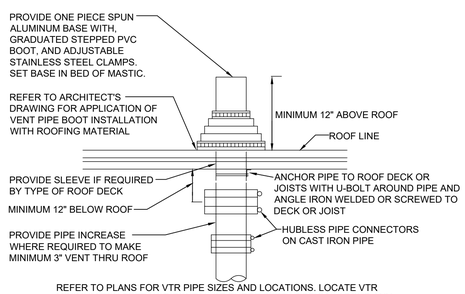

REFER TO PLANS FOR VTR PIPE SIZES AND LOCATIONS. LOCATE VTR MINIMUM TEN FEET HORIZONTAL OR THREE FEET VERTICAL ABOVE ANY BUILDING OPENING OR FRESH AIR INTAKE, AND ONE FOOT FROM ANY VERTICAL SURFACE. PROVIDE 1" FIBERGLASS INSULATION WITH ALL SERVICE JACKET ON VENT PIPE INSIDE BUILDING WITHIN SIX FEET OF VENT THRU ROOF LOCATION. VERIFY FLASHING AND COUNTERFLASHING WITH ROOFING CONTRACTOR.

4 TYP VENT THRU ROOF DETAIL
SCALE: N.T.S.

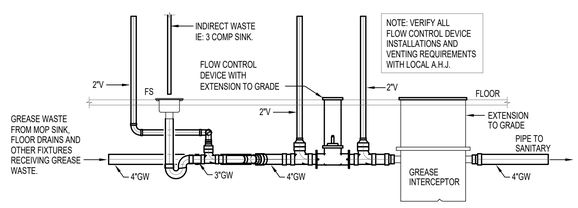

3 GREASE TRAP DETAIL
SCALE: N.T.S.

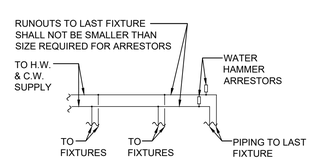

NOTE: USE TABLE 10-1 UNIFORM PLUMBING CODE FOR FIXTURE UNITS, FOR SIZING WATER HAMMER ARRESTORS. TABLE APPLIES TO BOTH UPC & IPC.

2 TYP WATER HAMMER ARRESTOR DETAIL
SCALE: N.T.S.

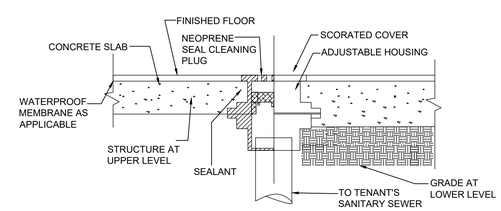

1 TYP FLOOR CLEAN-OUT DETAIL
SCALE: N.T.S.

THIS DRAWING AND ITS CONTENTS ARE THE COPYRIGHTED PROPERTY OF GHA ARCHITECTS. USE THEREOF IS LIMITED TO THE SPECIFIC PROJECT AND SITE SET FORTH ABOVE, AND MAY NOT BE OTHERWISE USED OR REPRODUCED, IN WHOLE OR IN PART, WITHOUT THE WRITTEN PERMISSION OF GHA ARCHITECTS, THE ARCHITECT. THIS DRAWING IS TO BE RETURNED UPON REQUEST.

GHA
Architecture / Development
14901 Quorum Drive
Suite 300
Dallas Texas 75254
Ph: (972) 239-8884
Fax: (972) 239-5054

STATE OF MICHIGAN
GRANT REID CLAUSSEN
License No. 6201309682
LICENSED PROFESSIONAL ENGINEER

12-17-2021

Engineering Firm : F-21834
GHC Engineers, LLC
14901 Quorum Dr, Ste 300
Dallas, Texas 75254
Office: 972-239-8884
gclaussen@ghcengineers.com
Project # G21-0959.001

EST. 1998 SCOOTER'S COFFEE

PROJECT ADDRESS:
1490 WEST ANN ARBOR ROAD
PLYMOUTH, MI 48170

REVISIONS:

TITLE:
PLUMBING DETAILS

DATE:
09/16/2021

PROJECT NO.
210536

- [ ] DESIGN DEVELOPMENT
- [x] PERMIT SUBMITTAL
- [ ] BID PACKAGE
- [ ] CONSTRUCTION ISSUE

SHEET NO.
P1.03

GENERAL NOTES

1. WHEN REQUIRED, IT IS THE OWNER'S RESPONSIBILITY TO CONTRACT WITH A COMMISSIONING AUTHORITY TO COMPLY WITH LOCAL CODES.
2. PROVIDE CLEANOUT LOW UNDER COUNTER AT EACH SINK/LAVATORY LOCATION IN ACCESSIBLE MANNER. PROVIDE CLEANOUT 12" - 18" A.F.F. AT THE MOP SINK AND FLOOR SINK.
3. SCOOTERS COFFEE PROTOTYPE OPERATES UNDER THE ASSUMPTION THAT NO GREASE INTERCEPTOR IS REQUIRED FOR THESE SPACES UNLESS REQUESTED BY LOCAL AUTHORITIES. REFER TO PLAN DRAWINGS AND KEY NOTES FOR PROPOSED SCHEMATIC ADDRESSING INTERCEPTOR REQUIREMENTS ON SITE.
4. PROVIDE AND INSTALL PIPE CLAMPS AND HANGERS AS REQUIRED BELOW SLAB TO ROUTE PIPE SUPRORTED FROM ELEVATED SLABS. FURNISH EXPANSION JOINTS WHERE PIPES ENTER THE SOIL.

NOTES BY SYMBOL (X)

1. REFER TO CIVIL UTILITY DRAWINGS FOR CONTINUATION.
2. BID ALTERNATE: FOR MUNICIPALITIES REQUIRING GREASE INTERCEPTORS SERVING KITCHEN WASTE. EXTEND GREASE WASTE PIPING FROM KITCHEN TO A MINIMUM 750 GALLON INTERCEPTOR. (VERIFY WITH LOCAL CODES MINIMUM INTERCEPTORS SIZE)
3. EXTEND SANITARY WASTE FROM RESTROOMS TO EXTERIOR AND TIE IN ON THE EFFLUENT SIDE OF THE INTERCEPTOR ONLY FOR SPACES REQUIRING GREASE TRAP. DO NOT TIE SANITARY WASTE FROM RESTROOMS INTO THE GREASE WASTE LINE FROM THE KITCHEN WHEN LOCAL AUTHORITIES REQUIRE AN INTERCEPTOR.
4. PROVIDE TRAP SEALS (TS) AT FLOOR DRAINS

CONTRACTOR NOTE

IT IS THE RESPONSIBILITY OF THE CONTRACTOR TO NOTIFY THE ARCHITECT, LANDLORD OR TENANT OF ANY DISCREPANCIES ENCOUNTERED ON THE PLANS OR IN EXISTING FAMILIARIZE THEMSELVES WITH EXISTING CONDITIONS AND SATISFY THEMSELVES AS TO THE NATURE AND SCOPE OF WORK.THE BASE BID SHALL REFLECT MODIFICATIONS TO SYSTEMS AND DEVICES AS REQUIRED BY STATE AND LOCAL CODES WHETHER INDICATED OR NOT ON CONTRACT DOCUMENTS. THE SUBMISSIONS OF A BID WILL BE EVIDENCE THAT SUCH AN EXAMINATION AND COMPLIANCE WITH GOVERNING CODES / REQUIREMENTS HAS BEEN MADE. LATER CLAIMS FOR LABOR, EQUIPMENT, OR MATERIALS REQUIRED OR FOR DIFFICULTIES ENCOUNTERED WHICH COULD HAVE BEEN FORESEEN, HAD AN EXAMINATION AND CODE REVIEW BEEN MADE, WILL NOT BE ALLOWED.

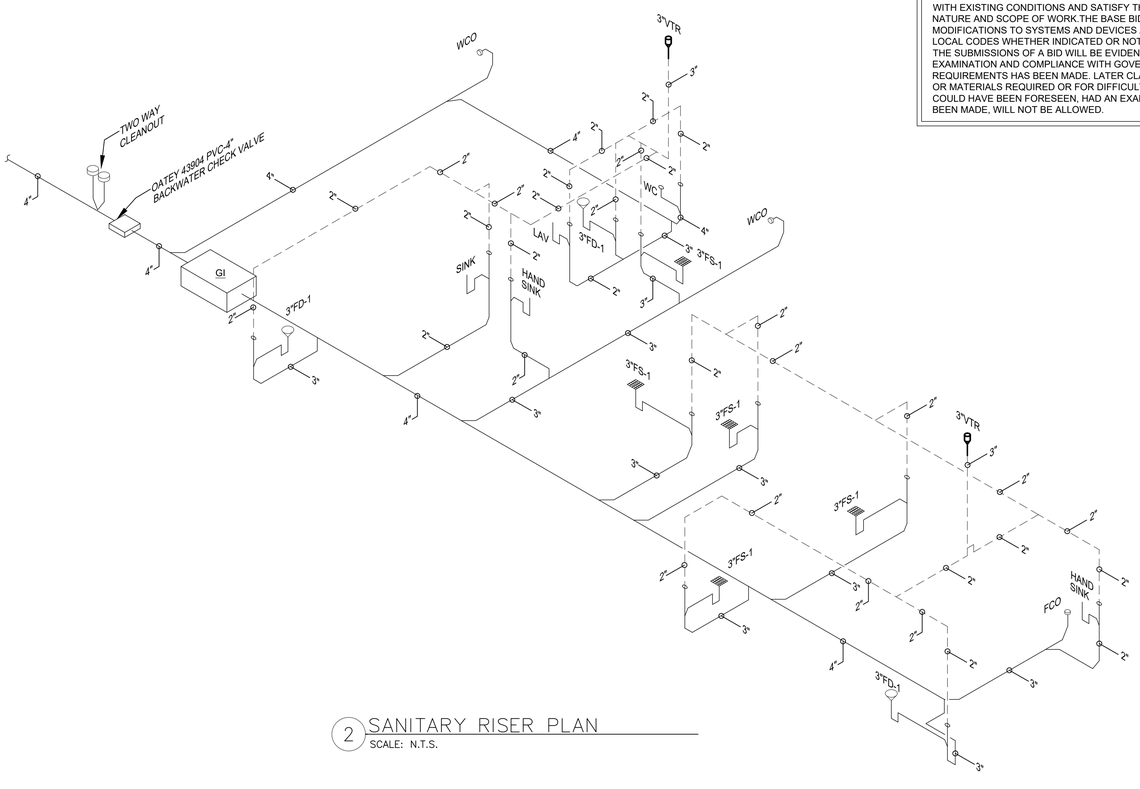

2 SANITARY RISER PLAN
SCALE: N.T.S.

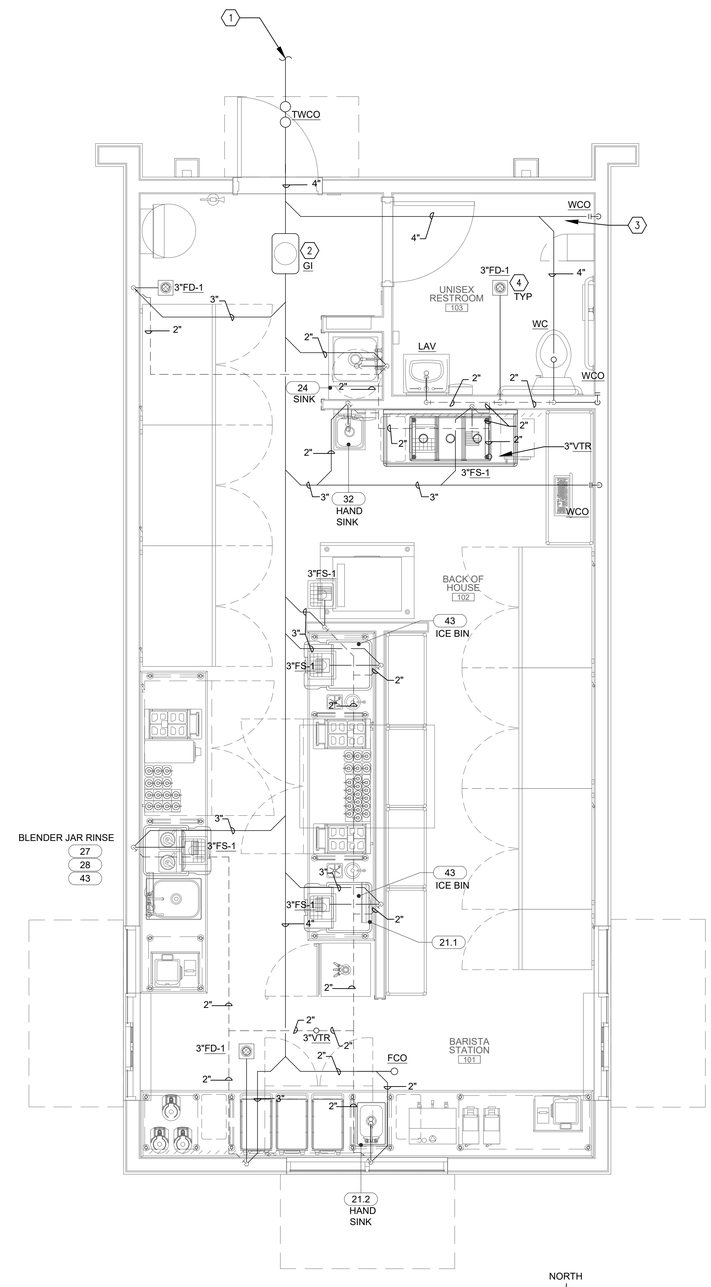

1 SANITARY SEWER FLOOR PLAN
SCALE: 3/8" = 1'-0"

NORTH

GHA
Architecture / Development
14901 Quorum Drive
Suite 300
Dallas Texas 75254
Ph: (972) 239-8884
Fax: (972) 239-5054

STATE OF MICHIGAN
GRANT REID CLAUSSEN
License No. 6201309682
LICENSED PROFESSIONAL ENGINEER

12-17-2021

Engineering Firm : F-21834
GHC Engineers, LLC
14901 Quorum Dr, Ste 300
Dallas, Texas 75254
Office: 972-239-8884
gclaussen@ghcengineers.com
Project # G21-0959.001

EST. 1998 SCOOTER'S COFFEE

PROJECT ADDRESS:
1490 WEST ANN ARBOR ROAD
PLYMOUTH, MI 48170

REVISIONS:

TITLE:
SANITARY SEWER FLOOR PLAN & RISER DIAGRAM

DATE:
09/16/2021

PROJECT NO.
210536

- [ ] DESIGN DEVELOPMENT
- [x] PERMIT SUBMITTAL
- [ ] BID PACKAGE
- [ ] CONSTRUCTION ISSUE

SHEET NO.
P2.01

THIS DRAWING AND ITS CONTENTS ARE THE COPYRIGHTED PROPERTY OF GHA ARCHITECTS USE THEREOF IS LIMITED TO THE SPECIFIC PROJECT AND SITE SET FORTH ABOVE, AND MAY NOT BE OTHERWISE USED OR REPRODUCED, IN WHOLE OR IN PART, WITHOUT THE WRITTEN PERMISSION OF GHA ARCHITECTS. THE ARCHITECT. THIS DRAWING IS TO BE RETURNED UPON REQUEST.

GENERAL NOTES

1. CONTRACTOR TO COORDINATE METER REQUIREMENTS WITH LANDLORD/ CITY AT START OF PROJECT
2. CONTRACTOR TO PROVIDE/INSTALL BACKFLOW PREVENTION AS NEEDED IF NONE IS FOUND ON SITE PER CITY REQUIREMENTS.
3. ALL PLUMBING AND ELECTRICAL SHALL BE CONCEALED WITHIN WALLS OR ABOVE CEILING. SOME LINES MAY BE OFFSET TO SHOW DIAGRAMMATIC CONNECTIONS.
4. PLUMBING CONTRACTOR SHALL REFER TO ARCHITECTURAL DRAWINGS, FOR PLACEMENT OF HOT AND COLD WATER SUPPLY TAPS PRIOR TO INSTALLATION. WATER SUPPLY LOCATIONS ON THIS SHEET ARE DIAGRAMMATIC.
5. ROUTING OF WATER LINES SHOWN ON PLANS IN VICINITY OF PANELS IS DIAGRAMMATIC. DO NOT ROUTE WATER LINES DIRECTLY ABOVE PANELS.
6. PROVIDE PRESSURE REDUCING VALVE ON MAIN TAP IF SERVICE PRESSURE EXCEEDS 80PSI, REDUCE TO 65 PSI. NOTIFY ENGINEER IF WATER PRESSURE IS BELOW 45 PSI ON SITE (STATIC OR DYNAMIC). MEASURE BEFORE BEGINNING CONSTRUCTION.

NOTES BY SYMBOL (X)

1. SEE CIVIL DRAWINGS FOR CONTINUATION OF WATER SUPPLY. CONTRACTOR TO VERIFY LOCATION PRIOR TO INSTALLATION.
2. 3/4" COLD WATER DOWN IN WALL FOR 1/2" COLD WATER CONNECTION TO DIPPER WELL AND RINSE SINK
3. PROVIDE 3/8" SHUT-OFF VALVE. FINAL CONNECTION TO MACHINE BY OTHERS.
4. PROVIDE DOUBLE CHECK VALVE RPZ ON WATER LINE AT POINT-OF-USE AT KITCHEN FIXTURE

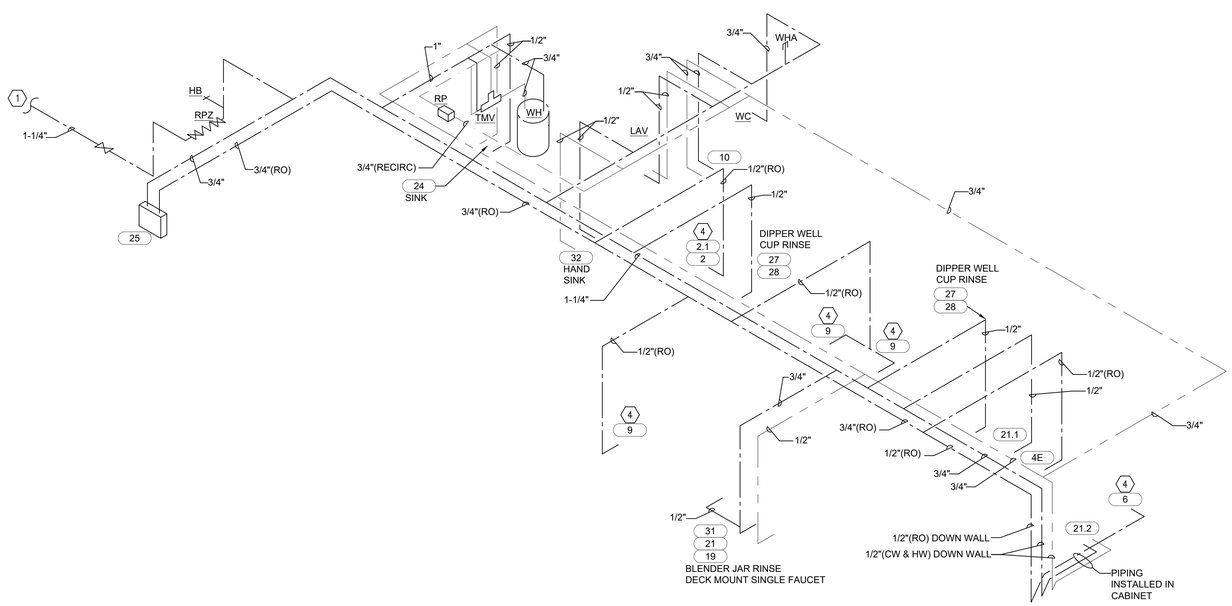

2 WATER SUPPLY RISER
SCALE: N.T.S.

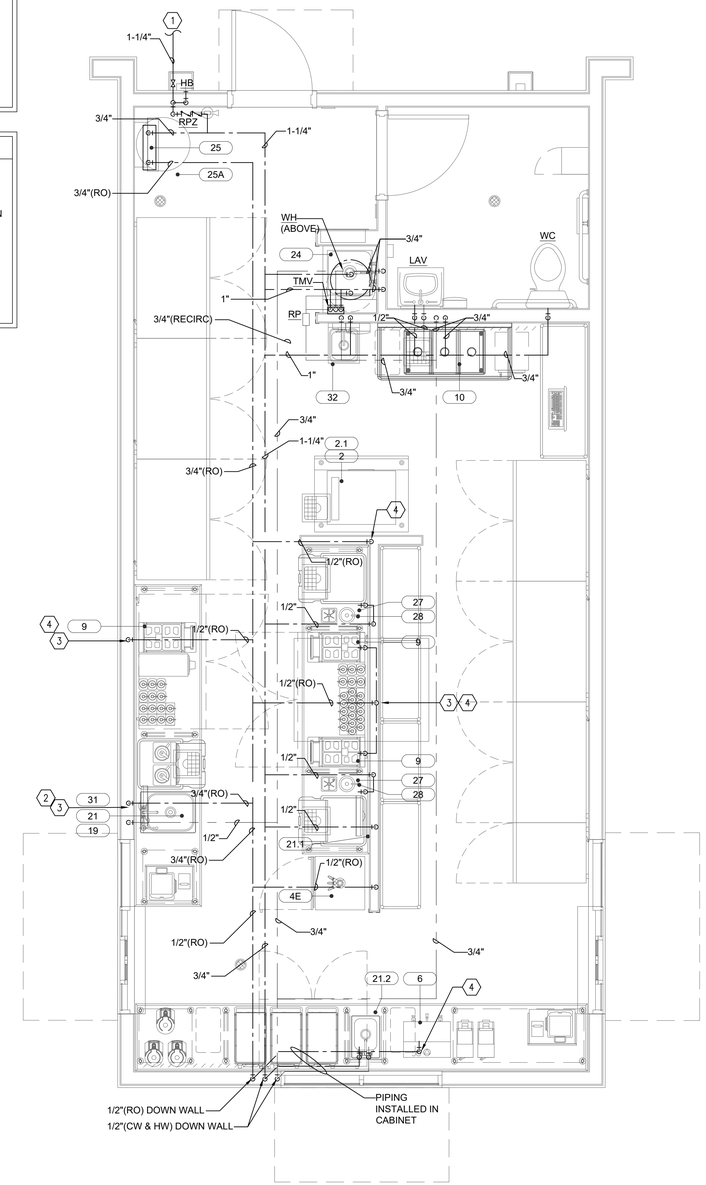

1 WATER SUPPLY FLOOR PLAN
SCALE: 3/8" = 1'-0"

NORTH

GHA
Architecture / Development
14901 Quorum Drive
Suite 300
Dallas Texas 75254
Ph: (972) 239-8884
Fax: (972) 239-5054

STATE OF MICHIGAN
GRANT REID CLAUSSEN
License No. 6201309682
LICENSED PROFESSIONAL ENGINEER

12-17-2021

Engineering Firm : F-21834
GHC Engineers, LLC
14901 Quorum Dr, Ste 300
Dallas, Texas 75254
Office: 972-239-8884
gclaussen@ghcengineers.com
Project # G21-0959.001

EST. 1998 SCOOTER'S COFFEE

PROJECT ADDRESS:
1490 WEST ANN ARBOR ROAD
PLYMOUTH, MI 48170

REVISIONS:

TITLE:
WATER SUPPLY FLOOR PLAN & RISER DIAGRAM

DATE:
09/16/2021

PROJECT NO.
210536

- [ ] DESIGN DEVELOPMENT
- [x] PERMIT SUBMITTAL
- [ ] BID PACKAGE
- [ ] CONSTRUCTION ISSUE

SHEET NO.
P2.02

THIS DRAWING AND ITS CONTENTS ARE THE COPYRIGHTED PROPERTY OF GHA ARCHITECTS USE THEREOF IS LIMITED TO THE SPECIFIC PROJECT AND SITE SET FORTH ABOVE, AND MAY NOT BE OTHERWISE USED OR REPRODUCED, IN WHOLE OR IN PART, WITHOUT THE WRITTEN PERMISSION OF GHA ARCHITECTS, THE ARCHITECT. THIS DRAWING IS TO BE RETURNED UPON REQUEST.

THIS DRAWING AND ITS CONTENTS ARE THE COPYRIGHTED PROPERTY OF GHA ARCHITECTS USE THEREOF IS LIMITED TO THE SPECIFIC PROJECT AND SITE SET FORTH ABOVE, AND MAY NOT BE OTHERWISE USED OR REPRODUCED, IN WHOLE OR IN PART, WITHOUT THE WRITTEN PERMISSION OF GHA ARCHITECTS, THE ARCHITECT. THIS DRAWING IS TO BE RETURNED UPON REQUEST.

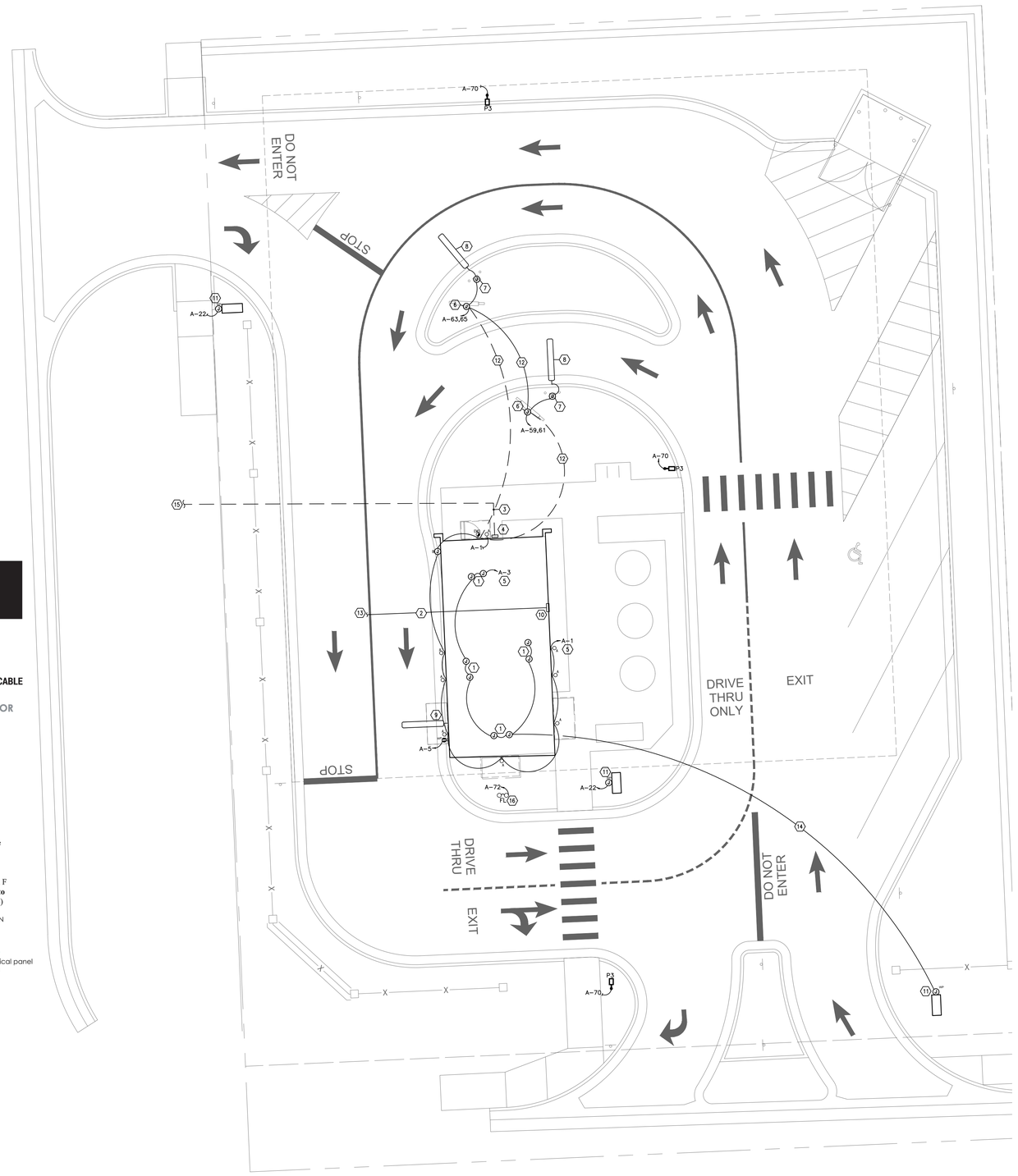

1 ELECTRICAL SITE PLAN

SCALE: 1" = 10'-0"

NORTH

DIGITAL

DT FLEX

FOUNDATION INSTRUCTIONS

DIAGRAM CC Template & Foundation

Mounting Template

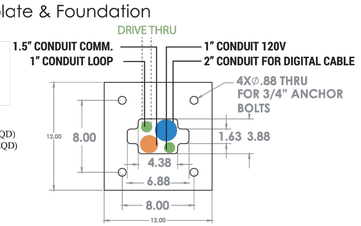

HOLE SIZES:
A: 0.813" DIA. HOLE.....(4 REQD)
B: SEE TEMPLATE DRAWING.....(1 REQD)

Foundation

The high voltage conduit must be installed in place by a qualified contractor. It runs from the power source to the menu board location. A conduit stub should protrude 4" above the concrete slab **(see Diagram T)** Use the template supplied for the correct relation between the mounting bolts and the conduit location. Power and ground leads should be pulled through the conduit approximately 12" beyond the conduit stub, and be accessible at the time of final wiring. **Note: The 120VAC power lines run up the inside back of the pedestal base (see Diagram CC, Mounting Template)**
After the location is established, pour the concrete footing per local codes. While the concrete is still soft, insert the four (4) anchor bolts. Use the supplied template as a bolt and conduit locator. Anchor bolts should be 2-3/4" above grade (see Diagram F Foundation. **Note: Prior to placing the template down, one (1) nut must be threaded onto each anchor bolt and sunk into the concrete, flush with the top of the nut.** Place the template over the eight (4) anchor bolts and secure in place with four (4) more nuts.

DIAGRAM T

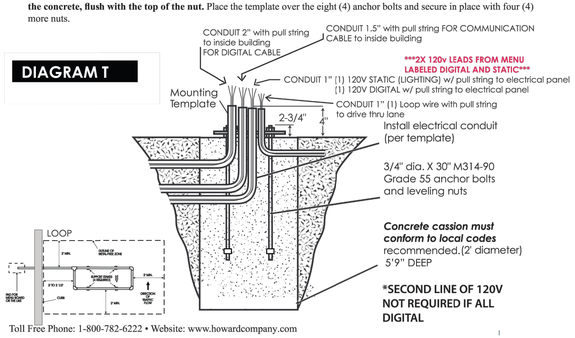

Toll Free Phone: 1-800-782-6222 • Website: www.howardcompany.com

DIGITAL MENU BOARD SCHEMATIC

GENERAL NOTES

A. ALL EXTERIOR LIGHT FIXTURES TO COMPLY WITH LOCAL NIGHT SKY ORDINANCE.

B. ALL EXTERIOR LIGHTING AND SIGNACE TO BE FED WITH #10 CU. U.N.O.

C. ALL EXTERIOR ELECTRICAL EQUIPMENT TO BE NEMA-3R RATED.

D. CONTRACTOR TO COORDINATE EXACT SITE LIGHTING FIXTURE LOCATIONS WITH LANDSCAPE DRAWINGS.

E. ALL FIXTURES INSTALLED OUTDOORS SHALL BE RATED FOR DAMP/WET LOCATIONS AS REQUIRED. THE CONTRACTOR SHALL COORDINATE DAMP/ WET LOCATION RATING PER NEC ARTICLE 410-0. ALL INSTALLATIONS SHALL CONFORM TO NEC ARTICLE 410, ALL SUB ARTICLES.

F. FIRE ALARM EQUIPMENT SHALL BE COORDINATED FOR EXACT LOCATION AND REQUIREMENTS WITH FIRE MARSHALL .

G. ALL PVC CONDUIT MUST HAVE A MINIMUM OF #12 CU. GROUND CONDUCTOR.

H. CONTRACTOR SHALL BE RESPONSIBLE FOR COORDINATE AND SCHEDULING WITH POWER AND TELEPHONE UTILITY COMPANIES INCLUDING (2) COMPLETE SETS OF DRAWINGS TO EACH COMPANY. ALL WORK SHALL BE INSTALLED PER EACH UTILITY COMPANIES FINAL DESIGN DRAWINGS.

I. CONTRACTOR SHALL BE RESPONSIBLE FOR COORDINATE EXACT LOCATIONS AND MOUNTING HEIGHTS OF ALL EXTERIOR LIGHT FIXTURES WITH ARCHITECTURAL DRAWINGS.

NOTES BY SYMBOL (X)

1. PROVIDE W.P. J-BOX FOR EXTERIOR SIGNAGE PER NEC. COORDINATE EXACT PRIOR TO INSTALLATION. EXTEND CIRCUIT THROUGH WALL SWITCH. REFER TO SHEET E1.0 FOR MORE INFORMATION. VERIFY EXACT REQUIREMENTS W/ OWNER.
2. 4' UNDERGROUND PVC CONDUIT WITH PULL WIRE AND RIGID STEEL BENDS PER TELEPHONE COMPANY REQUIREMENTS. TRENCH AND BACKFILL AS REQUIRED. REFER TO TABLE 300.5 FOR ADDITIONAL REQUIREMENTS .
3. NEW SECONDARY FEEDERS FROM TRANSFORMER PER POWER COMPANY REQUIREMENTS. ROUTING SHOWN FOR REFERENCE ONLY. REFER TO ONE-LINE DIAGRAM.
4. PROPOSED LOCATION OF NEW SERVICE ENTRANCE SECTION IN NEMA-3R ENCLOSURE. REFER TO ONE-LINE DIAGRAM AND LOAD CALCULATIONS.
5. CIRCUIT ROUTED TO WALL SWITCH. REFER TO SHEET E1.0 FOR LOCATION.
6. PROVIDE STUB-UP FOR DRIVE THRU DIGITAL MENU BOARD. COORDINATE EXACT POWER REQUIREMENTS WITH MANUFACTURER PRIOR TO INSTALLATION. SEE DIGITAL MENU BOARD SCHEMATIC.
7. PROVIDE W.P. J-BOX FOR DRIVE THRU SPEAKER. COORDINATE EXACT POWER REQUIREMENTS WITH MANUFACTURER PRIOR TO INSTALLATION. SEE DRIVE-THRU CONDUIT SCHEMATIC.
8. CONNECT SPEAKER PEDESTAL TO DETECTION LOOP, COORDINATE EXACT REQUIREMENT WITH MANUFACTURER PRIOR TO ROUGH-IN. SEE DRIVE-THRU CONDUIT SCHEMATIC.
9. PROVIDE STUB UP FOR DETECTION LOOP. COORDINATE EXACT REQUIREMENT WITH MANUFACTURER PRIOR TO ROUGH-IN. SEE DRIVE-THRU CONDUIT SCHEMATIC.
10. PROPOSED LOCATION OF MAIN POINT OF PRESENCE FOR TELEPHONE COMPANY DEMARCATION AND TERMINATION.
11. PROVIDE W.P. J-BOX FOR SIGN. COORDINATE EXACT LOCATION WITH ARCHITECT OR OWNER AND ELECTRICAL REQUIREMENT S WITH VENDER.
12. PROVIDE (4) ELECTRICAL NON METALLIC CONDUITS FOR DRIVE THRU DIGITAL MENU BOARD. REFER TO DRIVE THRU SCHEMATIC ON THIS SHEET FOR FURTHER INFORMATION. (1) 2" CONDUIT TO IT RACK FOR DIGITAL CABLE. (1) 1-1/2" CONDUIT TO IT RACK FOR COMMUNICATIONS. (1) 1" CONDUIT FOR BRANCH POWER (TWO 20A/1P BRANCH CIRCUITS REQUIRED) TO ELECTRICAL PANELBOARD AND (1) 1" CONDUIT FOR LOOP DETECTION ROUTED TO DRIVE-THROUGH AREA LOOP DETECTION SYSTEM.
13. TERMINATE AND STUB CONDUIT TO PROPERTY LINE OR EXISTING CABINET PER TELEPHONE COMPANY REQUIREMENT.
14. PROVIDE (3) #10" IN 3/4" NON METALLIC CONDUIT AT 24" BELOW FINISHED GRADE, PER NEC 300.5 VERIFY EXACT ROUTING PRIOR TO INSTALLATION. TRENCH, BACKFILL, AND REPAIR LANDSCAPE/ HARDSCAPE AS REQUIRED.
15. TO PROPOSED POWER COMPANY TRANSFORMER LOCATION. COORDINATE WITH UTILITY OWNER FOR EXACT LOCATION PRIOR TO TRENCHING. LOCATION SHOWN ON PLAN IS DIAGRAMMATIC
16. PROVIDE AND INSTALL FLAG POLE LIGHT REFER TO SHEET E2.01 FOR LIGHTING SCHEDULE.

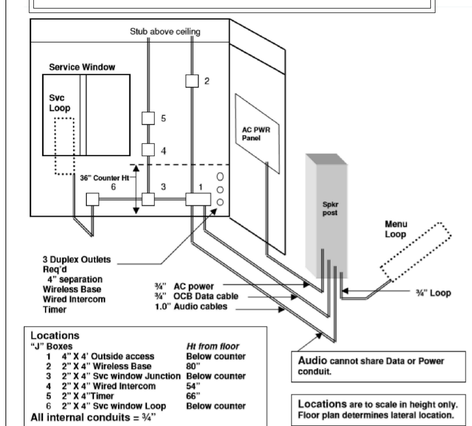

Locations

"J" Boxes		Ht from floor
1	4" X 4' Outside access	Below counter
2	2" X 4" Wireless Base	80"
3	2" X 4" Svc window Junction	Below counter
4	2" X 4" Wired Intercom	54"
5	2" X 4"Timer	66"
6	2" X 4" Svc window Loop	Below counter

All internal conduits = ¾"

DRIVE THRU CONDUIT SCHEMATIC

GHA
Architecture / Development
14901 Quorum Drive
Suite 300
Dallas Texas 75254
Ph: (972) 239-8884
Fax: (972) 239-5054

STATE OF MICHIGAN
GRANT REID CLAUSSEN
License No. 6201309682
LICENSED PROFESSIONAL ENGINEER

12-17-2021

Engineering Firm : F-21834
GHC Engineers, LLC
14901 Quorum Dr, Ste 300
Dallas, Texas 75254
Office: 972-239-8884
gclaussen@ghcengineers.com
Project # G21-0959.001

EST. 1998 SCOOTER'S COFFEE

PROJECT ADDRESS:
1490 WEST ANN ARBOR ROAD
PLYMOUTH, MI 48170

REVISIONS:

TITLE:

ELECTRICAL SITE PLAN

DATE:
09/16/2021

PROJECT NO.
210536

- [ ] DESIGN DEVELOPMENT
- [x] PERMIT SUBMITTAL
- [ ] BID PACKAGE
- [ ] CONSTRUCTION ISSUE

SHEET NO.
E0.01

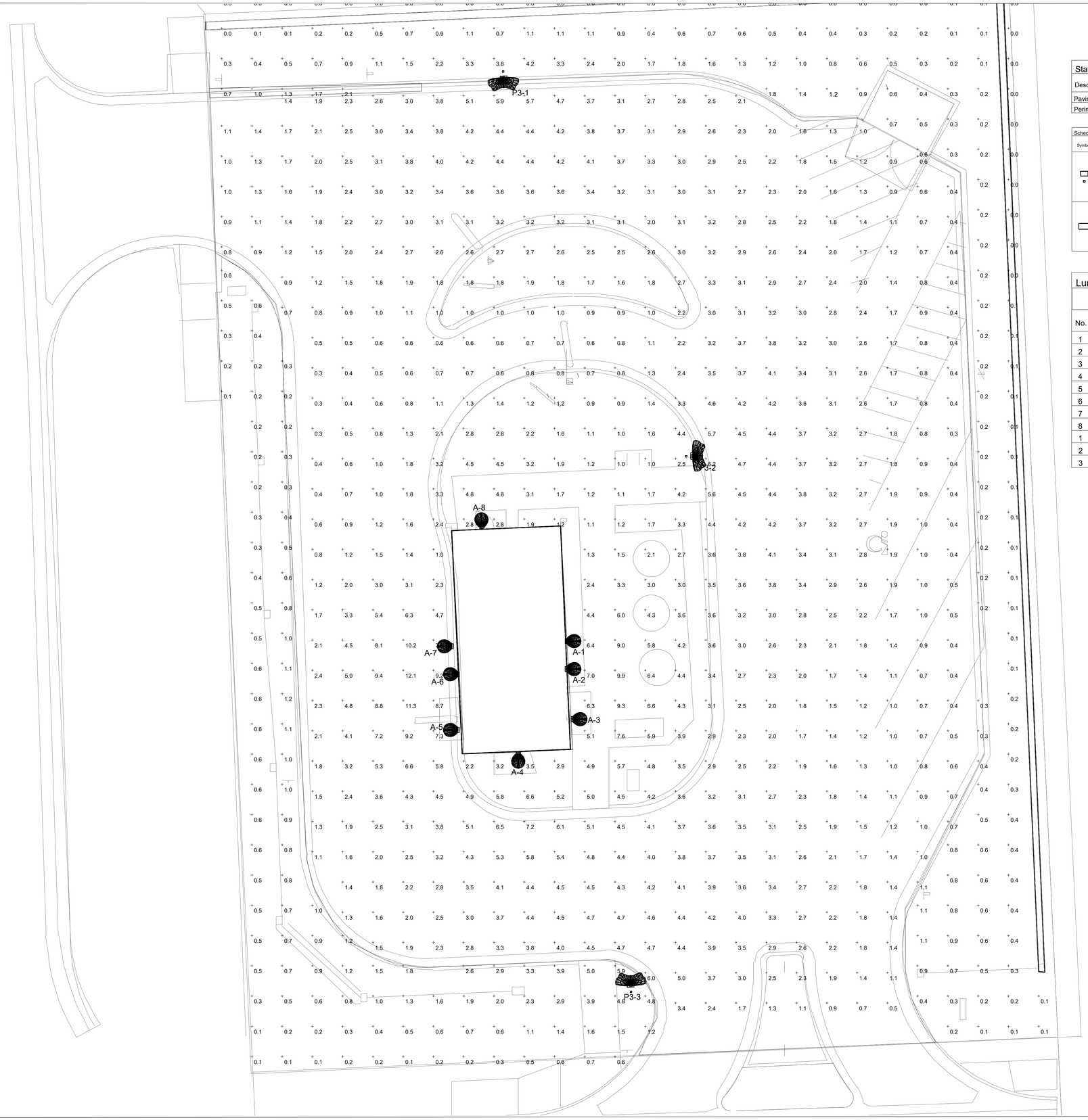

01 SITE PHOTOMETRIC PLAN
SCALE: 1/8" = 1'-0"

Statistics

Description	Symbol	Avg	Max	Min	Max/Min	Avg/Min
Paving Area	+	2.7 fc	12.1 fc	0.3 fc	40.3:1	9.0:1
Perimeter - N & E Boundary	+	0.6 fc	5.9 fc	0.0 fc	N/A	N/A

Schedule

Symbol	Label	Quantity	Manufacturer	Catalog Number	Description	Number Lamps	Lumens Per Lamp	Light Loss Factor	Wattage
	P3	3	Lithonia Lighting	DSX0 LED P6 30K T3M MVOLT HS	DSX0 LED P6 30K T3M MVOLT with houseside shield	1	11665	1	134
	A	8	Lithonia Lighting	ARC2 LED P2 50K	ARC2 LED WITH P2 - PERFORMANCE PACKAGE, 5000K	1	2393	1	16.1228

Luminaire Locations

		Location						Aim		
No.	Label	X	Y	Z	MH	Orientation	Tilt	X	Y	Z
1	A	1113598.00	26173.14	12.00	12'	90.00	0.00	1113598.00	26173.14	0.00
2	A	1113598.00	26168.52	12.00	12'	90.00	0.00	1113598.00	26168.52	0.00
3	A	1113599.00	26160.23	12.00	12'	90.00	0.00	1113599.00	26160.23	0.00
4	A	1113590.00	26154.48	12.00	12'	180.00	0.00	1113590.00	26154.48	0.00
5	A	1113580.00	26158.44	12.00	12'	270.00	0.00	1113580.00	26158.44	0.00
6	A	1113580.00	26167.66	12.00	12'	270.00	0.00	1113580.00	26167.66	0.00
7	A	1113579.00	26172.28	12.00	12'	270.00	0.00	1113579.00	26172.28	0.00
8	A	1113584.00	26192.00	12.00	12'	356.24	0.00	1113584.00	26192.00	0.00
1	P3	1113609.00	26115.17	19.00	19'	358.00	0.00	1113609.00	26116.25	0.00
2	P3	1113588.00	26267.30	19.00	19'	176.75	0.00	1113588.00	26266.22	0.00
3	P3	1113618.00	26203.70	19.00	19'	87.86	0.00	1113619.00	26203.74	0.00

GHA
Architecture / Development
14901 Quorum Drive
Suite 300
Dallas Texas 75254
Ph: (972) 239-8884
Fax: (972) 239-5054

STATE OF MICHIGAN
GRANT REID CLAUSSEN
License No. 6201309682
LICENSED PROFESSIONAL ENGINEER

12-17-2021

GHC ENGINEERS
Engineering Firm : F-21834
GHC Engineers, LLC
14901 Quorum Dr, Ste 300
Dallas, Texas 75254
Office: 972-239-8884
gclaussen@ghcengineers.com
Project # 621-0959.001

EST. 1998 SCOOTER'S COFFEE

PROJECT ADDRESS:
1490 WEST ANN ARBOR ROAD
PLYMOUTH, MI 48170

REVISIONS:

2 12/01/2021 SITE PLAN REVISION

TITLE:

EXTERIOR PHOTOMETRIC SITE PLAN

DATE:
09/16/2021

PROJECT NO.
210536

- [ ] DESIGN DEVELOPMENT
- [x] PERMIT SUBMITTAL
- [ ] BID PACKAGE
- [ ] CONSTRUCTION ISSUE

SHEET NO.

E0.02

THIS DRAWING AND ITS CONTENTS ARE THE COPYRIGHTED PROPERTY OF GHA ARCHITECTS USE THEREOF IS LIMITED TO THE SPECIFIC PROJECT AND SITE SET FORTH ABOVE, AND MAY NOT BE OTHERWISE USED OR REPRODUCED, IN WHOLE OR IN PART, WITHOUT THE WRITTEN PERMISSION OF GHA ARCHITECTS. THE ARCHITECT. THIS DRAWING IS TO BE RETURNED UPON REQUEST.

LED Wall Pack, 12 Watt, 1321 Lumens, 5000 Kelvin, Adjustable Full Cutoff, 5 Year Warranty, LEDWPCA12W-5K | Best Lighting Products

Best Lighting Products

Was: $65.45

Now: $42.46

Write a Review (No reviews yet

SKU: LEDWPCA12W-5K
AVAILABILITY: Usually ships within 1 week.
WEIGHT: 10.00 LBS
SHIPPING: Calculated at Checkout
SUB-TECH: LED
KELVIN: 5000K

Quantity: 1

ADD TO CART SAVE TO WISHLIST

NOTES:

FIXTURE IS MOUNTED 90 DEGREES TO NADAR, THEREFORE DOWNWARD FACING.

FIXTURE HAS FULL DARK SKY / BUG RATING. SEE CUT SHEET.

THE LIGHT SOURCES ARE DIRECTED DOWNWARD AND AWAY FROM ADJOINING PROPERTIES.

MOUNTING HEIGHT PER TABLE ABOVE IS 19' AFG.

LIGHT LEVELS ON THE NORTH AND EAST BOUNDARIES ARE ATE 0 FOOT-CANDLES. THERE IS A 6' SCREEN WALL ON THESE SIDES OF THE PROPERTY.

TIME CLOCK SETTING REQUIREMENT: EXTERIOR SITE LIGHTS TO TURN OFF NO LATER THAN 30 MINUTES AFTER CLOSING OF BUSINESS TRANSACTING HOURS.

D-Series Size 0
LED Area Luminaire

Buy American

Specifications

EPA: 0.95 ft² (.09 m²)
Length: 26" (66.0 cm)
Width: 13" (33.0 cm)
Height$_1$: 3" (7.6 cm)
Height$_2$: 7" (17.8 cm)
Weight (max): 16 lbs (7.25 kg)

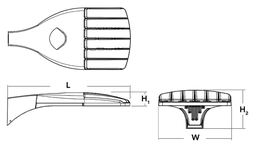

Catalog Number
Notes
Type

TO ON Tab key or mouse over this page to see all interactive elements.

Introduction

The modern styling of the D-Series is striking yet unobtrusive - making a bold, progressive statement even as it blends seamlessly with its environment. The D-Series distills the benefits of the latest in LED technology into a high performance, high efficacy, long-life luminaire.

The outstanding photometric performance results in sites with excellent uniformity, greater pole spacing and lower power density. It is ideal for replacing up to 400W metal halide with typical energy savings of 70% and expected service life of over 100,000 hours.

Ordering Information

EXAMPLE: DSX0 LED P6 40K T3M MVOLT SPA NLTAIR2 PIRHN DDBXD

DSX0 LED

Series	LEDs	Color temperature	Distribution	Voltage	Mounting
DSX0 LED	**Forward optics** P1 P5 P2 P6 P3 P7 [1] P4 [1] **Rotated optics** P10 [2] P12 [2] P11 [2] P13 [2,2]	30K 3000 K 40K 4000 K 50K 5000 K	T1S Type I short (Automotive) T2S Type II short T2M Type II medium T3S Type III short T3M Type III medium T4M Type IV medium TFTM Forward throw medium T5VS Type V. very short [3] T5S Type V. short [3] T5M Type V. medium [3] T5W Type V. wide [3] BLC Backlight control [4] LCCO Left corner cutoff [4] RCCO Right corner cutoff [4]	MVOLT (120V-277V) [5,6] XVOLT (277V-480V) [7,8,9] 120 [6] 208 [6] 240 [6] 277 [6] 347 [6] 480 [6]	**Shipped included** SPA Square pole mounting RPA Round pole mounting [10] WBA Wall bracket [11] SPUMBA Square pole universal mounting adaptor [12] RPUMBA Round pole universal mounting adaptor [12] **Shipped separately** KMA8 DDBXD U Mast arm mounting bracket adaptor (specify finish) [13]

Control options		Other options		Finish (required)	
Shipped installed NLTAIR2 nLight AIR generation 2 enabled [15,16] PIRHN Network, high/low motion/ambient sensor [17] PER NEMA twist-lock receptacle only (control ordered separate) [18] PER5 Five-pin receptacle only (control ordered separate) [18,22] PER7 Seven-pin receptacle only (leads exit fixture) (control ordered separate) [18,22] DMG 0-10V dimming extend out back of housing for external control (control ordered separate) [18]	PIR High/low, motion/ambient sensor, 8–15' mounting height, ambient sensor enabled at 5fc [16,19] PIRH High/low, motion/ambient sensor, 15–30' mounting height, ambient sensor enabled at 5fc [16,19] PIR1FC1V High/low, motion/ambient sensor, 8–15' mounting height, ambient sensor enabled at 1fc [16,20] PIRH1FC3V High/low, motion/ambient sensor, 15–30' mounting height, ambient sensor enabled at 1fc [16,20] FAO Field adjustable output [21]	**Shipped installed** HS House-side shield [23] SF Single fuse (120, 277, 347V) [6] DF Double fuse (208, 240, 480V) [6] L90 Left rotated optics [2] R90 Right rotated optics [2] DDL Diffused drop lens [24] HA 50°C ambient operations [5] BAA Buy America(n) Act Compliant **Shipped separately** BS Bird spikes [25] EGS External glare shield	DDBXD Dark bronze DBLXD Black DNAXD Natural aluminum DWHXD White DDBTXD Textured dark bronze DBLBXD Textured black DNATXD Textured natural aluminum DWHGXD Textured white	

© 2011-2021 Acuity Brands Lighting, Inc. All rights reserved.

Ordering Information

Accessories
Ordered and shipped separately.

DLL127F1.5 U Photocell - SSL twist-lock (120-277V) [26]
DLL347F1.5 CUL U Photocell - SSL twist-lock (347V) [26]
DLL480F1.5 CUL U Photocell - SSL twist-lock (480V) [26]
DSHORTSBK U Shorting cap [27]
DSHM5.20C U House-side shield for P1,P2,P3 and P4 [28]
DSHM5.50C U House-side shield for P10,P11,P12 and P13 [28]
DSHM5.40C U House-side shield for P5,P6 and P7 [28]
DSHOOD. U Diffused drop lens (polycarbonate) [29]
PUMBA DDBXD U [30] Square and round pole universal mounting bracket adaptor (specify finish) [31]
KMA8 DDBXD U Mast arm mounting bracket adaptor (specify finish) [32]
DSHOEGS-FINISH U External glare shield

For more control options, visit DTL and ROAM online. Link to nLight Air 2.

NOTES

1 P4 not available with P4, P7, and P13.
2 P10, P11, P12 and P13 and rotated options L90 or R90 only available together.
3 T5VS, T5S, T5M, T5W not available with nLight, is not available with WBA.
4 Not available with HS or DDL.
5 MVOLT driver operates on any line voltage from 120-277V (50/60 Hz).
6 Single fuse (SF) requires 120V, 277V or 347V. Double fuse (DF) requires 208V, 240V or 480V. XVOLT not available with fusing (SF or DF).
7 XVOLT only suitable for use with P4, P7 and P13.
8 XVOLT operates with any voltage between 277V and 480V.
9 XVOLT not available with fusing (SF or DF) and not available with PIR, PIRH, PIR1FC3V, PIRH1FC3V.
10 Square and round pole universal mounting adaptor fits 2-3/8" to 4" diameter.
11 Universal mounting brackets intended for retrofit on existing pre-drilled poles only. 1.5 G vibration load rating per ANCI C136.31. Only usable when pole's drill pattern is NOT Lithonia template #8.
12 Must order fixture with SPA mounting. Must be ordered as a separate accessory; see Accessories information. For use with 2-3/8" diameter mast arm (not included).
13 Must be ordered with PIRHN.
14 Specifications subject to dark bronze, black, white and natural aluminum colors.
15 Mast is ordered with NLTAIR2. For more information on nLight Air 2 visit this link.
16 Photocell ordered and shipped as a separate line item from Acuity Brands Controls. See accessories. Shorting Cap included.
17 If ROAM® mode required, it must be ordered and shipped as a separate line item from Acuity Brands Controls. Shorting Cap included.
18 Not available with PIRHN, PER5, PER7, PIR, PIRH, PIR1FC3V or PIRH1FC3V, FAO.
19 Reference Controls Options table on page 4.
20 Reference Motion Sensor Default Table on page 4 to see functionality.
21 Factory default output is 50% lumen output.
22 Not available with BLC, LCCO and RCCO distribution.
23 Must be ordered with fixture for factory pre-drilling.
24 Requires luminaire to be specified with PER, PER5 or PER7 option. See Controls Table on page 4.
25 For retrofit use only. Only usable when pole's drill pattern is NOT Lithonia template #8

EGS – External Glare Shield

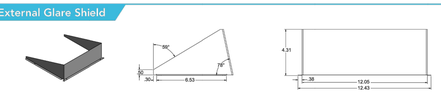

Drilling

HANDHOLE ORIENTATION
(from top of pole)

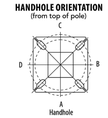

Template #8

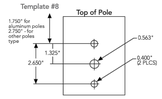

Tenon Mounting Slipfitter

Tenon O.D.	Mounting	Single Unit	2 @ 180	2 @ 90	3 @ 90	3 @120	4 @ 90
2-3/8"	RPA	AST3-5 190	AS3-5 280	AS3-5 290	AST3-5 390	AST3-5 320	AST3-5 490
2-7/8"	RPA	AST25-190	AST25-280	AST25-290	AST25-390	AST25-320	AST25-490
4"	RPA	AST35-190	AST35-280	AST35-290	AST35-390	AST35-320	AST35-490

Mounting Option	Drilling Template	Single	2 @ 180	2 @ 90	3 @ 90	3 @ 120	4 @ 90
Head Location		Side B	Side B & D	Side B & C	Side B, C & D	Round Pole Only	Side A, B, C & D
Drill Nomenclature	#8	DM19AS	DM28AS	DM29AS	DM39AS	DM32AS	DM49AS
		Minimum Acceptable Outside Pole Dimension					
SPA	#8	2-7/8"	2-7/8"	3.5"	3.5"		3.5"
RPA	#8	2-7/8"	2-7/8"	3.5"	3.5"	3"	3.5"
SPUMBA	#5	2-7/8"	3"	4"	4"		4"
RPUMBA	#5	2-7/8"	3.5"	5"	5"	3.5"	5"

DSX0 Area Luminaire - EPA

*Includes luminaire and integral mounting arm. Other tenons, arms, brackets or other accessories are not included in this EPA data.

Fixture Quantity & Mounting Configuration	Single DM19	2 @ 180 DM28	2 @ 90 DM29	3 @ 90 DM39	3 @ 120 DM32	4 @ 90 DM49
Mounting Type						
DSX0 LED	0.950	1.900	1.830	2.850	2.850	3.544

© 2011-2021 Acuity Brands Lighting, Inc. All rights reserved.

GHA
Architecture / Development
14901 Quorum Drive
Suite 300
Dallas Texas 75254
Ph: (972) 239–8884
Fax: (972) 239–5054

STATE OF MICHIGAN
GRANT REID CLAUSSEN
License No. 6201309682
LICENSED PROFESSIONAL ENGINEER

12-17-2021

Engineering Firm : F-21834
GHC Engineers, LLC
14901 Quorum Dr, Ste 300
Dallas, Texas 75254
Office: 972-239-8884
gclaussen@ghcengineers.com
Project # G21-0959.001

EST. 1998 SCOOTER'S COFFEE

PROJECT ADDRESS:
1490 WEST ANN ARBOR ROAD
PLYMOUTH, MI 48170

REVISIONS:

TITLE:

EXTERIOR LIGHTING CUT SHEETS

DATE:
09/16/2021

PROJECT NO.
210536

- [ ] DESIGN DEVELOPMENT
- [x] PERMIT SUBMITTAL
- [ ] BID PACKAGE
- [ ] CONSTRUCTION ISSUE

SHEET NO.

E0.02A

THIS DRAWING AND ITS CONTENTS ARE THE COPYRIGHTED PROPERTY OF GHA ARCHITECTS. USE THEREOF IS LIMITED TO THE SPECIFIC PROJECT AND SITE SET FORTH ABOVE, AND MAY NOT BE OTHERWISE USED OR REPRODUCED, IN WHOLE OR IN PART, WITHOUT THE WRITTEN PERMISSION OF GHA ARCHITECTS, THE ARCHITECT. THIS DRAWING IS TO BE RETURNED UPON REQUEST.

THIS DRAWING AND ITS CONTENTS ARE THE COPYRIGHTED PROPERTY OF GHA ARCHITECTS AND THE SPECIFIC PROJECT AND SITE SET FORTH ABOVE, AND MAY NOT BE OTHERWISE USED OR REPRODUCED, IN WHOLE OR IN PART, WITHOUT THE WRITTEN PERMISSION OF GHA ARCHITECTS. THIS DRAWING IS TO BE RETURNED UPON REQUEST.

26000 COMMON WORKS FOR ELECTRICAL SYSTEMS

PART 1 - GENERAL

1.0 DESCRIPTION

A. THE GENERAL PROVISIONS OF THE CONTRACT, INCLUDING GENERAL AND SUPPLEMENTARY CONDITIONS AND GENERAL REQUIREMENTS, APPLY TO THE WORK SPECIFIED IN THIS DIVISION.

B. CONTRACTOR SHALL VISIT THE SITE TO CONFIRM ITEMS LISTED AS EXISTING BY LANDLORD. ITEMIZED BIDS SHALL BE PROVIDED TO COMPLETE ANY SCOPE GAP ITEMS TO ENSURE ALL WORK REQUIRED BY THE CONTRACTOR IS INCLUDED IN THE SCOPE.

C. PRIOR TO FINAL BID, REFER DISCREPANCIES, ERRORS, OMISSIONS AND AMBIGUITIES IN THE CONTRACT DOCUMENTS TO THE OWNER'S REPRESENTATIVE IN WRITING. PROVIDE RESOLVED MATERIALS AND LABOR APPROVED BY THE OWNER'S REPRESENTATIVE AS PART OF THE FINAL BID.

D. THE INTENT OF THE CONTRACT DOCUMENTS IS TO PROVIDE COMPLETE SYSTEMS. PROVIDE MISCELLANEOUS ITEMS AND ACCESSORIES FOR COMPLETE SYSTEMS.

1.1 WORK INCLUDED

A. FURNISH LABOR, SUPPLIES, MATERIALS, EQUIPMENT AND INCIDENTALS NECESSARY FOR INSTALLATION OF A COMPLETE AND OPERATIONAL ELECTRICAL SYSTEM, AS SPECIFIED HEREIN. THIS SECTION, AS WELL AS THE REST OF THE CONTRACT DOCUMENTS APPLY TO THE PROJECT.

B. COORDINATE WITH ALL OTHER TRADES FOR ELECTRICAL EQUIPMENT CONNECTIONS AND INSTALLATIONS.

C. THE CONTRACT DOCUMENTS ARE A COMPLETE SCOPE OF WORK INCLUDING, BUT NOT LIMITED TO, ARCHITECTURAL, CIVIL, STRUCTURAL, MECHANICAL, ELECTRICAL, PLUMBING AND SPECIFICATIONS. CONTRACTOR TO REVIEW THE ENTIRE SET OF CONTRACT DOCUMENTS.

1.2 QUALITY ASSURANCE

A. ELECTRICAL WORK SHALL BE EXECUTED IN ACCORDANCE WITH LOCAL, STATE AND NATIONAL CODES, ORDINANCES AND REGULATIONS OF LOCAL AUTHORITIES HAVING JURISDICTION OVER THE WORK. IF THE STANDARDS AND CODES CONFLICT WITH EACH OTHER, THE MOST STRINGENT SHALL APPLY.

B. PRODUCTS SPECIFIED IN DIVISION 16 FOR WHICH MANUFACTURERS ARE NOTED MUST STILL COMPLY WITH ALL CONTRACT DOCUMENTS. MENTION OF MANUFACTURER BY NAME, OR A SPECIFIC PRODUCT IS NOT INTENDED TO LIMIT OTHER MANUFACTURERS FROM THE PROJECT.

C. PERFORM ALL WORK IN ACCORDANCE WITH THE REGULATIONS AND ORDINANCES OF LOCAL MUNICIPAL AND STATE AGENCIES WHO HAVE LAWFUL JURISDICTION OVER THE PROJECT.

D. PROTECT ALL PRODUCTS DURING DELIVERY AND HANDLING AT THE SITE.

1.3 GOVERNING CODES

A. LOCAL MUNICIPALITY ELECTRICAL CODES AND ORDINANCES.

B. NATIONAL FIRE PROTECTION ASSOCIATION (NFPA), 70-NATIONAL ELECTRICAL CODE.

C. OCCUPATIONAL SAFETY AND HEALTH ADMINISTRATION (OSHA), 29 CFR 1910.

D. AMERICANS WITH DISABILITIES ACT OF 1990 (ADA).

E. AMERICAN NATIONAL STANDARD INSTITUTE (ANSI).

F. NATIONAL ELECTRICAL MANUFACTURER'S ASSOCIATION (NEMA) STANDARDS.

G. UNDERWRITER LABORATORIES INCORPORATED STANDARDS (UL).

H. INSTITUTE OF ELECTRICAL AND ELECTRONIC ENGINEERS (IEEE).

I. NATIONAL ELECTRICAL SAFETY CODE (NESC).

J. AMERICAN SOCIETY FOR TESTING AND MATERIALS (ASTM).

K. MANUFACTURER'S RECOMMENDATIONS.

1.5 JOB REQUIREMENTS AND CONDITIONS:

A. PERMITS, LICENSES AND INSPECTIONS SHALL BE SECURED AND PAID FOR AS REQUIRED BY LAW FOR THE COMPLETION OF THE WORK. CERTIFICATES OF APPROVAL SHALL BE SECURED, PAID FOR, AND DELIVERED TO THE OWNER BEFORE THE FINAL ACCEPTANCE OF THE WORK.

B. COORDINATE WITH ALL TRADES TO AVOID CONFLICTS IN THE INSTALLATION OF WORK. COORDINATE EQUIPMENT, PIPING, CONDUITS AND RACEWAYS TO ALLOW FOR SPACE FOR OTHER TRADES.

C. NOTIFY PROPER AUTHORITIES HAVING JURISDICTION FOR FOR INSPECTIONS AS REQUIRED BY THE LOCAL MUNICIPALITY.

1.6 SUBMITTALS

A. PRODUCT DATA: PROVIDE MANUFACTURERS' PUBLISHED ENGINEERING DATA AND MATERIALS. ANY SUBMITTED PRODUCTS DIFFERENT THAN THE SPECIFIED PRODUCTS SHALL BE CLEARLY IDENTIFIED IN THE SUBMITTAL.
B. PROVIDE TEST REPORTS, MATERIAL LISTINGS AND ANY REQUIRED CERTIFICATES.
C. OPERATION AND MAINTENANCE DATA TO BE PROVIDED TO THE OWNER AT THE COMPLETION OF THE PROJECT WITH OWNER TRAINING.

1.7 WARRANTY

A. FURNISH THE MANUFACTURER'S PRINTED WARRANTY FOR EACH SEPARATE ITEM, ALONG WITH CONTRACTOR'S WRITTEN ONE (1) YEAR GUARANTEE. WARRANTY SHALL INCLUDE LABOR NECESSARY TO REPLACE DEFECTIVE PARTS DURING THE WARRANTY PERIOD.

PART 2 - PRODUCTS

2.0 MATERIALS

A. NEW, FREE FROM DEFECTS AND OF COMMERCIAL GRADE STANDARD MANUFACTURING BY REPUTABLE MANUFACTURERS.

B. ALL ELECTRICAL EQUIPMENT SHALL HAVE IDENTIFICATION TAGS. INSTALL NAMEPLATES ON ELECTRICAL DEVICES. TEXT SHALL INDICATE THE COMPONENT AS IDENTIFIED IN THE CONSTRUCTION DOCUMENTS.

C. PROVIDE TYPE WRITTEN PANEL SCHEDULES FOR ALL PANELBOARDS AFTER FINAL INSTALLATION IS COMPLETE, IDENTIFYING THE BRANCH CIRCUITS AND AREAS SERVED.

D. ALL SIMILAR MATERIALS SHALL BE BY THE SAME MANUFACTURER.

2.1 SUBSTITUTIONS

A. PROJECT TO BE BID PER CONTACT DOCUMENTS EXCLUDING ANY SUBSTITUTIONS AND SUBSTITUTION REQUESTS TO BE PROVIDED PER DIVISION 1 REQUIREMENTS.

B. REQUESTS IMPLY NO OBLIGATION ON THE OWNER.

C. APPROVED SUBSTITUTIONS THAT REQUIRE CHANGES, INCLUDING WORK IN OTHER DIVISIONS, SHALL HAVE NO ADDITIONAL COSTS TO THE OWNER.

D. SUBSTITUTIONS DURING ANY VALUE ENGINEERING WILL PROVIDE CREDIT TO THE OWNER FROM THE ORIGINAL CONSTRUCTION BID.

PART 3 - EXECUTION

3.0 INSPECTION

A. ANY MATERIALS DAMAGED UPON RECEIPT SHALL BE REPLACED. ANY MATERIALS DAMAGED WHILE ON SITE SHALL BE REPLACED AT NO COST TO OWNER.

B. BEFORE STARTING WORK, REPORT ANY STRUCTURAL DEFECTS THAT WILL ADVERSELY AFFECT THE QUALITY AND EXECUTION OF WORK TO OWNER'S REPRESENTATIVE.

C. ANY OBSERVED ITEMS IN THE BUILDING AND SITE THAT MIGHT POSE A SAFETY HAZARD TO THE OWNER, CONTRACTOR, BUILDING USERS OR MAINTENANCE PERSONNEL THAT WILL BE INVOLVED WITH THE UPKEEP OF THE BUILDING'S ELECTRICAL AND MECHANICAL SYSTEMS SHALL BE REPORTED TO THE OWNER'S REPRESENTATIVE.

3.1 INSTALLATION

A. CLEAN AND MODIFY ALL SURFACES AND STRUCTURES FOR WHICH MATERIALS ARE TO BE INSTALLED FOR A PROPER AND SECURE INSTALLATION.

B. CONSTRUCTION DOCUMENTS ARE DIAGRAMMATIC AND CONTRACTOR IS TO FIELD VERIFY ALL ROUTING, LOCATIONS AND CONFLICTS WITH OTHER TRADES AT NO COST TO OWNER. ENGINEER DOES NOT VERIFY QUANTITY OF MATERIALS NEEDED FOR A COMPLETE INSTALLATION.

C. INSTALL ALL MATERIALS PER THE GOVERNING CODES.

D. EXTERIOR TRENCHING TO FOLLOW DIVISION 2 SITE WORK FOR EXCAVATION AND BACKFILL.

E. WHERE CUTTING AND PATCHING IS REQUIRED, RESTORE DISTURBED WORK TO MATCH ADJACENT FINISHES. WHERE WORK INVOLVES STRUCTURAL MEMBERS OR WALLS, CONSULT OWNER'S REPRESENTATIVE IN WRITING FOR STRUCTURAL ENGINEER TO VERIFY ACCEPTANCE.

F. PAINTING TO BE PROVIDED PER MANUFACTURER'S RECOMMENDATIONS. MARRED EQUIPMENT SHALL BE FINISHED WITH TOUGH-UP PAINT FOR EQUIPMENT TO LOOK NEW AND FREE OF DAMAGE.

G. PROVIDE FIRE RATED SLEEVES WHERE PENETRATING FIRE RATED WALLS WITH RATED ASSEMBLIES OR RACEWAY WITH FIRE SEALING.

H. EXTERIOR WALL PENETRATIONS TO BE WATER TIGHT. PROVIDE FLASHINGS, SEALANTS AND CAULKS TO PREVENT WATER INTRUSION.

I. MAINTAIN RECORD 'AS-BUILT' DRAWINGS THROUGHOUT THE CONSTRUCTION PROCESS.

26100 ELECTRICAL

PART 1 - GENERAL

1.0 INSPECTION

A. FURNISH ALL LABOR, MATERIALS AND EQUIPMENT NECESSARY FOR A COMPLETE AND OPERATIONAL ELECTRICAL SYSTEMS. MINIMUM MATERIAL AND EQUIPMENT SPECIFICATIONS PROVIDED IN THIS SECTION.

PART 2 - PRODUCTS

2.0 MATERIALS

A. PRODUCTS FROM MANUFACTURERS SHALL BE UL LABELED AND LISTED FOR THE APPLICATION USED.

2.1 CONDUCTORS AND CABLES

A. COPPER BUILDING WIRE: FLEXIBLE, INSULATED AND UNINSULATED, DRAWN COPPER CURRENT-CARRYING CONDUCTOR WITH AN OVERALL INSULATION LAYER OR JACKET, OR BOTH, RATED 600V OR LESS. COMPLY WITH UL 83.

1. FEEDERS: TYPE XHHW, THHN/THWN, 600V, COPPER, 75°C RATING.
2. BRANCH CIRCUITS: TYPE THHN/THWN, 600V, COPPER, 75°C RATING. ALL BRANCH CIRCUITS TO HAVE A DEDICATED NEUTRAL. NO COMMON NEUTRAL WITH TANDEM BREAKERS ALLOWED.
3. MINIMUM WIRE SIZE SHALL BE #12 AWG.
4. CONDUCTORS TO BE SOFT DRAWN, ANNEALED COPPER WITH A CONDUCTIVITY OF NOT LESS THAN 98% PURE COPPER AND UL LISTED.
5. CONDUCTORS #10 AWG AND SMALLER TO BE SOLID.
6. CONDUCTORS #8 AWG AND LARGER TO BE STRANDED.
7. 480Y/277V SYSTEMS:
   a. PHASE A - BROWN
   b. PHASE B - ORANGE
   c. PHASE C - YELLOW
   d. NEUTRAL - GRAY
   e. GROUND - GREEN WITH YELLOW STRIPE
8. 208Y/120V SYSTEMS:
   a. PHASE A - BLACK
   b. PHASE B - RED
   c. PHASE C - BLUE
   d. NEUTRAL - WHITE
   e. GROUND - GREEN

B. WIRING CONNECTORS:

1. TWIST-ON CONNECTORS TO BE SPRING INSULATED TYPE.
2. COMPRESSION CONNECTORS TO BE LONG BARREL TYPE FOR DOUBLE FOR 600V WIRING FOR 250 KCMIL AND LARGER.
3. INSULATED SPLIT BOLTS FOR FOR 600V WIRING SMALLER THAN 250 KCMIL.

2.2 GROUNDING AND BONDING

A. SYSTEM

1. GROUND UP BUILDINGS - COMPLETE GROUNDING ELECTRODE SYSTEM CONFORMING WITH ALL REQUIREMENTS OF NEC 250.52(A)(1) THROUGH (A)(7) THAT ARE PRESENT AT THE BUILDING SHALL BE BONDED TOGETHER. PROVIDE ISOLATED BUS BAR IN MAIN ELECTRICAL ROOM AND TELECOM ROOMS. RESISTANCE TO EARTH TO BE 5 OHMS OR LESS. ADD GROUNDING ELECTRODE SYSTEMS AS NECESSARY TO REACH RESISTANCE LEVELS
   a. METAL UNDERGROUND WATER PIPE.
   b. METAL FRAME OF BUILDING OR STRUCTURE.
   c. CONCRETE-ENCASED ELECTRODE (UFER).
   d. GROUND RING (WHERE APPLICABLE).
   e. GROUND RODS.
   f. PLATE ELECTRODE.
   g. OTHER LISTED SYSTEMS.
2. FOR EXISTING BUILDING - TEST EXISTING RESISTANCE TO EARTH OF THE EXISTING GROUNDING ELECTRODE SYSTEM. PROVIDE ADDITIONAL GROUNDING ELECTRODES AS NECESSARY TO REACH A MINIMUM RESISTANCE TO EARTH OF 5 OHMS. PROVIDE GROUNDING BUS BARS IN ELECTRICAL ROOMS AND TELECOM ROOMS CONNECTED TO THE EXISTING GROUNDING ELECTRODE SYSTEM.

B. MATERIALS

1. SEE SINGLE LINE POWER DIAGRAM FORM GROUNDING CONDUCTOR SIZE. MINIMUM TO BE #2/0 AWG BARE COPPER 30" BELOW GRADE. ABOVE GROUND TO BE GREEN-COLORED INSULATION WITH CONTINUOUS YELLOW STRIP.
2. GROUND BUS - HORIZONTALLY ON INSULATED SPACERS 2" FROM WALL AND 6" AFF. PREDRILLED RECTANGULAR BARS ON ANNEALED COPPER, 1/4" X 4" IN CROSS SECTION AND LENGTH AS NEEDED. CONNECTORS TO BE MECHANICAL, CAST SILICON BRONZE, SOLDERLESS COMPRESSION-TYPE, LONG-BARREL WITH TWO-BOLT CONNECTION TO BUS BAR.
3. TERMINATIONS:
   a. PIPE AND EQUIPMENT - BOLTED CONNECTORS.
   b. UNDERGROUND CONNECTIONS - EXOTHERMIC WELD.
   c. STRUCTURAL STEEL - WELDED CONNECTORS.

2.3 RACEWAYS AND BOXES

A. CONDUIT

1. ELECTRICAL METALLIC TUBING (EMT): ZINC COATED GALVANIZED THIN-WALL STEEL TUBING. ANSI C80.3 AND UL 797.
2. RIGID METAL CONDUIT (RMC): HEAVY WALL, ZINC COATED GALVANIZED STEEL. ANSI C80.1 AND UL 65.
3. INTERMEDIATE METAL CONDUIT (IMC): HIT-DIPPED GALVANIZED STEEL WITH A COUPLING AND END THREAD PROTECTOR FOR EACH SECTION. ANSI C80.6 AND UL 1242 WITH AN INTERIOR COATING OF SILICON EPOXY ESTER LUBRICANT.
4. FLEXIBLE METAL CONDUIT (FMC): HOT-DIPPED GALVANIZED STEEL STRIP CORE WITH INTEGRAL COPPER GROUND WIRE AND UL 1.
5. LIQUIDTIGHT FLEXIBLE METAL CONDUIT (LFMC): HOT-DIPPED GALVANIZED STEEL STRIP CORE WITH EXTRUDED POLYVINYL JACKET, SUN-LIGHT-RESISTANT AND NON-WRINKLING WITH INTEGRAL COPPER GROUND WIRE AND UL 360 AND SUITABLE FOR 90°C CONDUCTORS.
6. RIGID NONMETALLIC CONDUIT (RNC): SCHEDULE 40 POLYVINYLCHLORIDE (PVC), NEMA TC 2 AND UL 651. PROVIDE SCHEDULE 80 WHERE NOTED. SWITCH TO IMC OR RMC WHERE CONDUIT TURNS UP INTO BUILDING.
7. MINIMUM RACEWAY SIZE TO BE 3/4"C.

B. CONDUIT FITTINGS

1. RIGID CONDUIT TO HAVE THREADED FITTINGS.
2. EMT TO HAVE COMPRESSION TYPE FITTINGS.
3. METAL FITTINGS TO COMPLY WITH NEMA FB 1 AND UL 514B.
4. NONMETALLIC FITTINGS TO COMPLY WITH NEMA TC 3. MATCH TO CONDUIT OR TUBING TYPE AND MATERIAL.

C. WIREWAYS

1. SHEET METAL COMPLYING WITH UL 870 AND NEMA 250. PROVIDE NEMA 1, 3R, OR 4 AS NOTED. SIZED AS NOTED, BUT MUST MEET MINIMUM FILL AND BENDING RADIUSES PER NEC WITH HINGED TYPE COVERS.

D. BOXES, ENCLOSURES AND CABINETS

1. RATED FOR ENVIRONMENT.
2. SHEET METAL OUTLET AND DEVICE BOXES: COMPLY WITH NEMA 0S 1 AND UL 514A
3. CAST-METAL OUTLET AND DEVICE BOXES: COMPLY WITH NEMA FB1, ALUMINUM, TYPE FD, WITH GASKETED COVER.
4. FLOOR BOXES EQUAL TO WIREMOLD EVOLUTION SERIES FOR POKE-THRU AND IN GRADE TYPES. MINIMUM OF TWO DUPLEX OUTLETS AND DATA OUTLETS WHERE SHOWN.
5. ALL CEILING LUMINAIRE AND FAN OUTLET BOXES TO BE NONADJUSTABLE. LUMINAIRE BOXES RATED TO 50 LB AND LUMINAIRES WEIGHTING MORE THAN 50 LB SHALL BE LISTED AND MARKED FOR THE MAXIMUM ALLOWABLE WEIGHT. PADDLE FAN OUTLET BOXES MIMINUM 70 LB RATING.
6. CABINETS TO BE NEMA 250. PROVIDE NEMA 1, 3R, OR 4 AS NOTED. GALVANIZED-STEEL BOX WITH REMOVABLE INTERIOR PANEL AND REMOVABLE FRONT. HINGED DOOR IN FRONT COVERT WITH FLUSH LATCH AND CONCEALED HINGE. KEYED TO MATCH PANELBOARDS.
7. JUNCTION AND PULL BOXES: CODE GAUGE GALVANIZED STEEL WITH GALVANIZED STEEL COVERS. PULL BOXES INSTALLED ON THE EXTERIOR OR IN WET LOCATIONS SHALL BE WEATHERPROOF IN ACCORDANCE WITH NEMA 250.
8. LOCKNUTS TO BE ZINC-PLATED OR CADMIUM PLATED MALLEABLE IRON.

2.4 WIRING DEVICES AND OUTLETS

A. SPECIFICATION GRADE.

B. SWITCHES: 20A, 120-277V RATING.

C. RECEPTACLES: 20A, 125V, 3-WIRE, DUPLEX GROUNDING. PROVIDE GFCI, AFCI, AND TAMPER PROOF RECEPTACLES WHERE REQUIRED BY NEC. GFCI RATED RECEPTACLES REQUIRED IN KITCHENS, BARS, RESTROOMS, EXTERIOR, AS WELL AS OTHER AREAS. TAMPER-PROOF RECEPTACLES ARE NOW REQUIRED IN COMMON AREAS.

D. COVER PLATES: STAINLESS STEEL IN KITCHENS, CAST ALUMINUM IN EXTERIOR LOCATIONS AND SMOOTH, HIGH-IMPACT THERMOPLASTIC IN INTERIOR SPACES UNLESS OTHERWISE NOTED.
   1. ALL STAINLESS STEEL COVER PLATES TO BE ETCHED WITH CIRCUIT IDENTIFICATIONS. THERMOPLASTIC PLATES TO BE PROVIDED WITH IDENTIFICATION STICKERS.

E. OUTLET BOX CONNECTIONS:
   1. BUSHINGS: HIGH IMPACT, THERMOSETTING PHENOLIC INSTULATED, RATED AT 150°C.
   2. THREADED NIPPLES: CONDUIT NIPPLES WITH TWO SETS OF THREADS.
   3. PLASTIC ELECTRICAL TAPE RATED AT 600V; 3M #35+ OR EQUAL.

2.5 PANELBOARDS

1. DISTRIBUTION PANELBOARDS:
   a. BASIS OF DESIGN TO BE SQUARE D 'I-LINE' SERIES. ALL PANELBOARDS TO BE OF THE SAME MANUFACTURER.
   b. NEMA RATING AS SHOWN ON PANEL SCHEDULES.
   c. THREE PHASE, 4 WIRE, SOLID NEUTRAL DESIGN WITH SEQUENCE BUSSING, FULL CAPACITY NEUTRAL AND SEPARATE GROUND BUS.
   d. MAIN CIRCUIT BREAKER (MCB) OR MAIN LUGS ONLY (MLO) AS NOTED ON PANEL SCHEDULES.
   e. PROVIDE TYPEWRITTEN PANEL SCHEDULE IN INSIDE OF DOOR.
   f. CABINET TO HAVE DOOR IN DOOR STYLE FRONT COVER.
   g. COPPER BUSSING, FULLY RATED TO A.I.C. RATING SHOWN ON PANEL SCHEDULE. MINIMUM OF 22 KAIC.
   h. CIRCUIT BREAKER TO BE BOLT-ON TYPE. QUICK-MAKE, QUICK BREAK WITH SEPARATE TRIP POSITION.
   i. NO 20A/1P TANDEM CIRCUIT BREAKERS ALLOWED. EACH CIRCUIT TO HAVE A DEDICATED NEUTRAL.
   j. PROVIDE PREPARED SPACES AND SPARES AS SHOWN ON PANEL SCHEDULES.
   k. PROVIDE 60A/3P CIRCUIT BREAKER FOR EXTERNAL SURGE PROTECTIVE DEVICE (SPD)
2. BRANCH PANELBOARDS:
   a. BASIS OF DESIGN TO BE SQUARE D 'NQ' AND 'NF' SERIES DEPENDING ON VOLTAGE. ALL PANELBOARDS TO BE OF THE SAME MANUFACTURER.
   b. NEMA RATING AS SHOWN ON PANEL SCHEDULES.
   c. THREE PHASE, 4 WIRE, SOLID NEUTRAL DESIGN WITH SEQUENCE BUSSING, FULL CAPACITY NEUTRAL AND SEPARATE GROUND BUS.
   d. MAIN CIRCUIT BREAKER (MCB) OR MAIN LUGS ONLY (MLO) AS NOTED ON PANEL SCHEDULES.
   e. PROVIDE TYPEWRITTEN PANEL SCHEDULE IN INSIDE OF DOOR.
   f. CABINET TO HAVE DOOR IN DOOR STYLE FRONT COVER.
   g. COPPER BUSSING, FULLY RATED TO A.I.C. RATING SHOWN ON PANEL SCHEDULE. MINIMUM OF 22 KAIC.
   h. CIRCUIT BREAKER TO BE BOLT-ON TYPE. QUICK-MAKE, QUICK BREAK WITH SEPARATE TRIP POSITION.
   i. NO 20A/1P TANDEM CIRCUIT BREAKERS ALLOWED. EACH CIRCUIT TO HAVE A DEDICATED NEUTRAL.
   j. ALL SPACES NOT DESIGNATED WITH A CIRCUIT AND LOAD TO BE PROVIDED WITH SPARE 20A/1P CIRCUIT BREAKERS.

2.6 SAFETY SWITCH / DISCONNECTS

A. DISCONNECTS TO BE OF THE SAME MANUFACTURER AS THE PANELBOARDS.

B. HEAVY DUTY RATED WITH QUICK-MAKE, QUICK-BREAK AND HORSEPOWER RATED.

C. FUSED AND NON-FUSED DISCONNECTS AS SHOWN ON DRAWINGS. FUSES TO BE RK-5.

2.7 LOW-VOLTAGE DRY-TYPE TRANSFORMERS

A. PRIMARY AND SECONDARY RATING OF 600V AND LESS, WITH CAPACITIES UP TO 300 kVA.

B. MANUFACTURER TO BE THE SAME AS THE PANELBOARDS.

C. QUALIFICATIONS:

1. LISTED AND LABELED AS DEFINED IN NFPA 70 BY QUALIFIED TESTING AGENCY AND MARKED FOR INTENDED LOCATION AND USE.
2. COMPLY WITH 10 CFR 431 (DOE 2016) EFFICIENCY LEVELS AND MARKED AS COMPLIANT BY AN NRTL.

D. MATERIALS

1. CORES: ELECTRICAL GRADE, NON-AGING SILICON STEEL WITH HIGH PERMEABILITY AND LOW HYSTERESIS LOSES.
   a. ONE LEG PER PHASE,
   b. CORE VOLUME SHALL ALLOW EFFICIENT TRANSFORMER OPERATION AT 10 PERCENT ABOVE THE NOMINAL TAP VOLTAGE.
   c. GROUNDED TO ENCLOSURE. SEE GROUNDING DETAIL FOR SEPARATELY DERIVED GROUNDING SYSTEM.
2. COILS: CONTINUOUS WINDINGS WITHOUT SPLICES EXCEPT FOR TAPS.
   a. COIL MATERIAL: COPPER.
   b. INTERNAL COIL CONNECTIONS: BRAZED OR PRESSURE TYPE.
3. ENCLOSURE: VENTILATED. COMPLY WITH NEMA 250.
4. TAPS: TWO 2.5% TAPS ABOVE AND TWO 2.5% TAPS BELOW NORMAL FULL CAPACITY.
5. INSULATION CLASS: 220°C, UL-COMPONENT-RECOGNIZED INSTULATION SYSTEM WITH A MAXIMUM OF 150°C RISE ABOVE 40°C AMBIENT TEMPERATURE.
6. PROVIDE GROUND-BAR KIT OR A GROUND BAR INSTALLED ON THE INSIDE OF THE TRANSFORMER ENCLOSURE.
7. ELECTROSTATIC SHIELDING: EACH WINDING SHALL HAVE AN INDEPENDENT, SINGLE, FULL-WIDTH COPPER ELECTROSTATIC SHIELD ARRANGED TO MINIMIZE INTERWINDING CAPACITY.
8. LOW-SOUND-LEVEL REQUIREMENTS: MAXIMUM SOUND LEVELS WHEN FACTORY TESTED ACCORDING TO IEEE C57.12.91.
9. PROVIDE ENGRAVED, LAMINATED-ACRYLIC OR MELAMINE PLASTIC SIGNS FOR EACH PIECE OF EQUIPMENT, MOUNTED WITH CORROSION-RESISTANT SCREWS.

2.8 LOW-VOLTAGE EXTERNAL SURGE PROTECTIVE DEVICES

A. TYPE 1 SURGE PROTECTIVE DEVICES (SPD):

1. LISTED AND LABELED BY AN NRTL ACCEPTABLE TO AUTHORITIES HAVING JURISDICTION AS COMPLYING WITH UL 1449, TYPE 1.
2. OPTIONS TO INCLUDE:
   a. INTEGRAL DISCONNECT SWITCH,
   b. INTERNAL THERMAL PROTECTION THAT DISCONNECTS THE SPD BEFORE DAMAGING INTERNAL SUPPRESSOR COMPONENTS.
   c. LED INDICATOR LIGHTING DISPLAY FOR PROTECTION STATUS.
   d. AUDIBLE ALARM.
   e. NEMA ICS 5, DRY FORM C CONTACTS RATED AT 2A AND 24V AC FOR REMOTE MONITORING OF PROTECTION STATUS.
   f. SURGE COUNTER.
3. PERFORMANCE CRITERIA:
   a. MCOV: NOT LESS THAN 125% OF NOMINAL SYSTEM VOLTAGE FOR 208Y/120V, AND NOT LESS THAN 115% OF NOMINAL SYSTEM VOLTAGE FOR 480Y/277V.
   b. PEAK SURGE CURRENT RATING: MINIMUM SINGLE-PULSE SURGE CURRENT WITHSTAND RATING PER PHASE MUST NOT BE LESS THAN 200 kA. PEAK SURGE CURRENT RATING MUST BE ARITHMETIC SUM OF THE RATINGS OF INDIVIDUAL MOVs IN A GIVEN MODE.
   c. PROTECTION MODES AND UL 1449 VPR FOR GROUNDED WYE CIRCUITS WITH480Y/277V OR 208Y/120V, THREE-PHASE, FOUR-WIRE CIRCUITS MUST NOT EXCEED THE FOLLOWING:
      LINE TO NEUTRAL: 1200V FOR 480Y/277V AND 700V FOR 208Y/120V.
      LINE TO LINE: 2000V FOR 480Y/277V AND 1200V FOR 208Y/120V.
4. SCCR: NOT LESS THAN 200 kA.
5. INOMINAL RATING: 20 kA.

B. TYPE 2 SURGE PROTECTIVE DEVICES (SPDs)

1. LISTED AND LABELED BY AN NRTL ACCEPTABLE TO AUTHORITIES HAVING JURISDICTION AS COMPLYING WITH UL 1449, TYPE 2.
2. OPTIONS TO INCLUDE:
   a. LED INDICATOR LIGHTING DISPLAY FOR PROTECTION STATUS.
   b. INTERNAL THERMAL PROTECTION THAT DISCONNECTS THE SPD BEFORE DAMAGING INTERNAL SUPPRESSOR COMPONENTS.
   c. NEMA ICS 5, DRY FORM C CONTACTS RATED AT 2A AND 24V AC FOR REMOTE MONITORING OF PROTECTION STATUS.
   d. SURGE COUNTER.
3. PERFORMANCE CRITERIA:
   a. MCOV: NOT LESS THAN 125% OF NOMINAL SYSTEM VOLTAGE FOR 208Y/120V, AND NOT LESS THAN 115% OF NOMINAL SYSTEM VOLTAGE FOR 480Y/277V.
   b. PEAK SURGE CURRENT RATING: MINIMUM SINGLE-PULSE SURGE CURRENT WITHSTAND RATING PER PHASE MUST NOT BE LESS THAN 100 kA. PEAK SURGE CURRENT RATING MUST BE ARITHMETIC SUM OF THE RATINGS OF INDIVIDUAL MOVs IN A GIVEN MODE.
   c. PROTECTION MODES AND UL 1449 VPR FOR GROUNDED WYE CIRCUITS WITH480Y/277V OR 208Y/120V, THREE-PHASE, FOUR-WIRE CIRCUITS MUST NOT EXCEED THE FOLLOWING:
      LINE TO NEUTRAL: 1200V FOR 480Y/277V AND 700V FOR 208Y/120V.
      LINE TO GROUND: 1200V FOR 480Y/277V AND 700V FOR 208Y/120V.
      NEUTRAL TO GROUND: 1200V FOR 480Y/277V AND 700V FOR 208Y/120V.
      LINE TO LINE: 2000V FOR 480Y/277V AND 1200V FOR 208Y/120V.
4. SCCR: EQUAL OR EXCEED 100 kA.
5. INOMINAL RATING: 20 kA.

PART 3 - EXECUTION

3.1 WIRING

A. DO NOT PULL CONDUCTORS UNTIL THE RACEWAY SYSTEM HAS BEEN COMPLETELY INSTALLED. INSTALL CONDUCTORS AT ONE TIME, USING ONLY LUBRICANTS APPROVED FOR THIS PURPOSE. FOR WIRE SIZES #12 THROUGH #10, PRE-INSULATED, TWIST-ON CONNECTORS MAY BE USED TO SPLICE WIRE. USE COMPRESSION CONNECTORS FOR SPLICES OF STRANDED CONDUCTORS. USE RING-TONGUE TYPE CONNECTORS FOR CONTROL WIRING.

B. ALL WIRING SHALL BE COLOR CODED IN ACCORDANCE WITH THE NEC. SPLICES SHALL OCCUR ONLY WITHIN OUTLET BOXES. ENDS OF POWER WIRING SHALL BE MARKED WITH A 1 INCH BAND OF COLOR CODED TAPE. INSTALL A GREEN GROUNDING CONDUCTOR FOR ALL SYSTEMS.

C. PHASING SHALL BE MAINTAINED CONSISTENT THROUGHOUT THE DISTRIBUTION SYSTEM.

D. WIRING CONNECTIONS MADE WITHOUT TWIST-ON CONNECTORS SHALL BE WRAPPED WITH THREE LAYERS OF PLASTIC TAPE. EACH LAP SHALL EXTEND OVER THE PREVIOUS LAYER BY 1/2 THE TAPE DIMENSION.

E. THE ELECTRICAL DISTRIBUTION SYSTEM SHALL MATCH THE EXISTING SYSTEM. PHASING OF THE SYSTEM THROUGHOUT THE DISTRIBUTION SYSTEM SHALL BE A/B/C IN A CLOCKWISE ROTATION. SAFETY SWITCHES AND POWER RECEPTACLES SHALL HAVE THE SAME PHASE ARRANGEMENT THROUGHOUT THE SYSTEM.

3.2 WIRING DEVICE BOXES

A. PROVIDE AN OUTLET BOX FOR EACH WIRING DEVICE AND LIGHT FIXTURE AND AS REQUIRED BY THE NEC. DEVICE BOXES SHALL BE LOCATED AS INDICATED ON THE DRAWINGS. LOCATIONS ARE APPROXIMATE ONLY AND SHALL BE LOCATED IN THE FIELD TO CONFORM TO FIELD CONDITIONS. IN CASE OF CONFLICTS OR UNUSUAL CONDITIONS, NOTIFY OWNER FOR INSTRUCTIONS. BOXES SHALL BE SECURED FIRMLY IN POSITION USING PROPER ANCHORING DEVICES.

B. WHERE MULTIPLE SWITCHES OR RECEPTACLES ARE NOTED IN A COMMON LOCATION, PROVIDE MULTIPLE GANG BOXES. BOXES SHALL BE MOUNTED TRUE AND LEVEL.

3.3 WIRING DEVICES

A. SWITCHES SHALL BE QUIET TYPE, RATED 20 AMPERES, 120 VOLTS AC ONLY. SWITCHES SHALL BE FLUSH TYPE AND BE CAPABLE OF BACK AND SIDE WIRING. THE BRIDGE MOUNTING STRAP SHALL BE OF ONE-PIECE CONSTRUCTION WITH ASSURED GROUNDING MEANS IN ACCORDANCE WITH NEC ARTICLE 250-74, EXCEPTION NO. 2 LIGHT SWITCHES SHALL BE AS MANUFACTURED BY HUBBELL, ARROW HART, IDEAL, OR PASS & SEYMOUR.

B. DUPLEX RECEPTACLES SHALL BE SPECIFICATIONS GRADE, GROUNDING TYPE, 20 AMP, 125 VOLT WITH BRASS TERMINAL SCREWS, COLOR CODED AND EQUAL TO HUBBELL 5362.

3.4 JUNCTION AND PULL BOXES

A. UNLESS NOTED, PROVIDE JUNCTION AND PULL BOXES IN ACCORDANCE WITH THE NEC REQUIREMENTS, OR WHERE NEEDED BY JOB CONDITIONS. PROVIDE SEPARATE BOXES FOR ELECTRICAL POWER AND CONTROL OR COMMUNICATIONS CIRCUITS.

3.5 CONDUIT

A. CONDUITS SHALL BE SIZED IN ACCORDANCE WITH THE NEC FOR NUMBER AND SIZE OF WIRES INSTALLED. MINIMUM CONDUIT SIZE SHALL BE 3/4".

B. CONDUITS SHALL BE RUN PARALLEL TO THE LINES OF THE BUILDING AT ELEVATIONS IN TRUSS. CONDUIT LOCATIONS SHALL BE COORDINATED AND INSTALLED IN A MANNER TO AVOID CONFLICTS WITH OTHER TRADES. CONDUIT SHALL BE SECURELY ANCHORED OR SUPPORTED FROM THE STRUCTURE IN A MANNER TO PREVENT DISPLACEMENT. WHERE EVER POSSIBLE INSTALL RUNS OF CONDUIT IN PARALLEL LINES, SUPPORTED FROM COMMON TRAPEZE HANGERS.

C. INSTALLATION OF CONDUIT SHALL BE IN ACCORDANCE WITH BUILDING CODE REQUIREMENTS AND ACCEPTED PRACTICE. CONDUITS SHALL BE

PANELBOARD A

VOLT: 208 / 120 PH: 3 4 AIC ##: 22,000 BY: Grant Claussen

MAIN AMPS: 400 AMP, MCB MCB SURFACE SURFACE PROJECT: SCOOTER'S COFFEE PMI NO.: 20111

LOAD DESCRIPTION	FEEDER NO	POLES & AMPS	CONNECTED LOAD VOLT - AMPS A	B	C	CKT #	A	B	C	CKT #	CONNECTED LOAD VOLT - AMPS A	B	C	FEEDER NO	POLES & AMPS	LOAD DESCRIPTION
DRIVE THRU SPEAKER, LTG	1	20/2	1426			1	■			2	429			1	20/1	EF-1, LIGHTING
BUILDING LETTERS, MONUMENT SIGN	1	20/2		1200		3		■		4		605		1	20/1	25 - WATER FILTRATION
EXT. DRIVE THRU RECEPTACLE	1	20/1			360	5			■	6			1800	1	20/1	1 - SMOOTHIE BLENDER
EXTERIOR RECEPTACLE	1	20/1	360			7	■			8	1800			1	20/1	1 - SMOOTHIE BLENDER
RTU-1 (HR)	3	70/3		5267		9		■		10		1824		1	20/1	2 - ICE CUBE MACHINE W/ BIN
					5267	11			■	12			4800	2	30/2	3 - HIGH SPEED OVEN
			5267			13	■			14	4800					
BUILDING LETTERS, MONUMENT SIGN	1	20/1		1200		15		■		16		4800		2	30/2	FUTURE E3 - HIGH SPEED OVEN
14B - FREEZER	1	20/1			1440	17			■	18			4800			
DUCT DETECTOR	1	20/1	360			19	■			20	720			1	20/1	4A - U/C REFRIGERATOR (48")
SECURITY	1	20/1		1440		21		■		22		500		1	20/1	SIGN- DIRECTIONAL
14B - FREEZER	1	20/1			1440	23			■	24			792	1	20/1	4B- U/C REFRIGERATOR 60")
14B - FREEZER	1	20/1	1440			25	■			26	792			1	20/1	4B- U/C REFRIGERATOR 60")
14B - FREEZER	1	20/1		1440		27		■		28		720		1	20/1	4-E WORKTOP REFRIGERATOR
14B - FREEZER	1	20/1			1440	29			■	30			1320	1	20/1	5 - COFFEE GRINDER
30 - DRIVE THRU TIME	1	20/1	960			31	■			32	1320			1	20/1	5 - COFFEE GRINDER
30 - DRIVE THRU TIME	1	20/1		960		33		■		34		2000		2	30/2	6 - COFFEE BREWER
26 - ZOOM TIMER	1	20/1			300	35			■	36			2000			
FRONT COUNTER RECEPTACLE	1	20/1	540			37	■			38	360			1	20/1	8A-POS SYSTEM
SHOW WINDOWS LTG	1	20/1		1200		39		■		40		1800		1	20/1	8 - POS SYSTEM PRINTER
ISLAND CONV. RECEPTACLE	1	20/1			360	41			■	42			3600	2	30/2	9 - ESPRESSO MACHINE
ROOFTOP RECEPTACLE	1	20/1	180			43	■			44	3600					
PANEL CONV. RECEPTACLE	1	20/1		360		45		■		46		3600		2	30/2	9 - ESPRESSO MACHINE
DATA RACK	1	20/1			360	47			■	48			3600			
COMPUTER RECEPTACLE	1	20/1	180			49	■			50	235			1	20/1	LED STRIP LIGHTING
RESTROOM RECEPTACLE	1	20/1		180		51		■		52		840		1	20/1	13 - REFRIGERATOR
RECIRCULATION PUMP	1	20/1			360	53			■	54			840	1	20/1	13 - REFRIGERATOR
WATER HEATER	4	50/2	4000			55	■			56	1200			1	20/1	SIGN
				4000		57		■		58		1200		1	20/1	SIGN
DIGITAL MENU BOARD	1	20/1			500	59			■	60			1200	1	20/1	INTERNALLY DIRECTIONAL SIGN
DIGITAL MENU BOARD	1	20/1	500			61	■			62	4800			2	30/2	3 - HIGH SPEED OVEN
DIGITAL MENU BOARD	1	20/1		500		63		■		64		4800				
DIGITAL MENU BOARD	1	20/1			500	65			■	66			3600	2	30/2	9 - ESPRESSO MACHINE
SPARE		20/1				67	■			68	3600					
SPARE		20/1				69		■		70		411		1	20/1	LIGHT POLE
SPARE		20/1				71			■	72			207		20/1	FLAG POLE LIGHT
SPARE		20/1				73	■			74	360			1	20/1	8A-POS SYSTEM
SPARE		20/1				75		■		76		1800		1	20/1	8 - POS SYSTEM PRINTER
SPARE		20/1				77			■	78					20/1	SPARE
SPARE		20/1				79	■			80					20/1	SPARE
SPARE		20/1				81		■		82					20/1	SPARE
SPARE		20/1				83			■	84					20/1	SPARE

TOTAL PHASE 'A'	39229
TOTAL PHASE 'B'	42647
TOTAL PHASE 'C'	40886

TOTAL LIGHTING	11208	X 1.25		14010
TOTAL KITCHEN	74181	X 0.65		48217
TOTAL RECEPTACLE	12120	X 0.50	>10kva	11060
TOTAL MISC EQUIPMENT	0	X 1.00		0
TOTAL HVAC/MOTOR	15801	X 1.00		15801
TOTAL WATER HEATING	8000	X 1.00		8000
LARGEST MOTOR	660	X 1.25		825
TOTAL CONN. LOAD	121970	TOTAL DEMAND LOAD		97913
DIVERSIFIED DESIGN LOAD =	97913	/ 208	X 1.73 =	272

REMARKS

FEEDER:

1= 2#12, 1#12G, 3/4"C (LD) PROVIDE LOCKED-ON DEVICE

2= 2#10, 1#10G, 3/4"C (LO) PROVIDE LOCKED-OF DEVICE

3= 3#4, 1#8G, 1"C (HR) PROVIDE HACR RATED CB

4= 2#8, 1#10G,3/4"C (GFCI) PROVIDE GFCI RECEPTACLE

3 PANEL SCHEDULE
SCALE: NOT TO SCALE

LINETYPE LEGEND:

- - - - - - - - EXISTING EQUIPMENT/FEEDER TO REMAIN

———— NEW FEEDER

NOTES BY SYMBOL:

1. PROVIDE AND INSTALL NEW 400A SERVICE ENTRANCE MAIN DISCONNECT. MOUNT DISCONNECT ABOVE FLOOD PLAN LEVEL
2. PROVIDE AND INSTALL NEW 2 SETS OF (4) #3/0 THWN, (1) #1/0 GND, 2"C EACH.
3. PROVIDE AND INSTALL NEW TIME CLOCK.

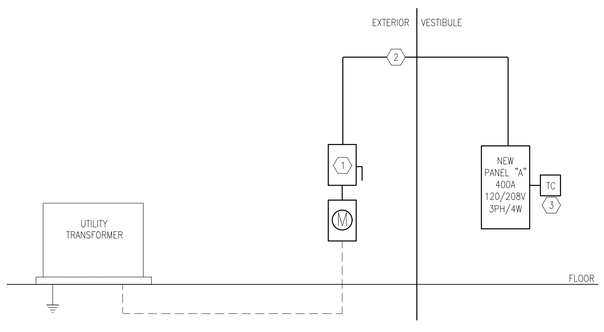

2 SINGLE LINE DIAGRAM
SCALE: NOT TO SCALE

ELECTRICAL GENERAL NOTES

1. THESE PLANS ARE SCHEMATIC. DRAWINGS HAVE BEEN CREATED FROM AS-BUILT DOCUMENTS BELONGING TO THE OWNER. THE CONTRACT DOCUMENTS CREATED BY THIS OFFICE ARE DIAGRAMMATIC AND SHOW THE INTENTION OF THIS FACILITY TO RENOVATE AND INSTALL NEW EQUIPMENT AND ASSOCIATED MATERIALS. CONTRACTOR SHALL FIELD VERIFY EXISTING CONDITION PRIOR TO BID
2. ALL ELECTRICAL WORK IS REQUIRED TO BE PERFORMED BY A CERTIFIED ELECTRICAL CONTRACTOR. ALL WIRING, EQUIPMENT, DEVICES AND INSTALLATIONS SHALL CONFORM TO ALL APPLICABLE LOCAL, STATE AND FEDERAL CODES.
3. PROVIDE ALL WIRING, CONDUIT, LABOR AND MATERIALS NOT SHOWN ON PLAN, BUT NECESSARY FOR COMPLETE AND PROPER OPERATION OF THE ELECTRICAL SYSTEM.
4. CONTRACTOR SHALL BE RESPONSIBLE FOR ALL FEES AND PERMITS AS NECESSARY TO COMPLETE THIS JOB. CONTRACTOR SHALL PROVIDE ALL LABOR, MATERIALS AND EQUIPMENT NECESSARY TO ENSURE A COMPLETE WORKING SYSTEM.
5. ALL ELECTRICAL WORK MUST COMPLY WITH THE REQUIREMENTS OF NFPA 70 (NATIONAL ELECTRICAL CODE), NFPA 70B, NFPA 70E, IECC, OSHA IN ADDITION TO OTHER REFERENCES REQUIRED BY CONTRACT.
6. INSTALLATION OF SWITCHES, OUTLETS AND CONTROL DEVICES SHALL COMPLY WITH LOCAL CODES AND STATE ADA REQUIREMENTS.
7. REFER TO MECHANICAL AND PLUMBING SHEETS FOR EXACT LOCATION OF ALL MECHANICAL AND PLUMBING EQUIPMENT. PROVIDE ALL LABOR AND MATERIALS REQUIRED TO CONNECT ELECTRICAL POWER TO ALL MECHANICAL AND PLUMBING EQUIPMENT.
8. ALL ELECTRICAL EQUIPMENT, DEVICES AND CIRCUITS SHALL CONTAIN A GROUNDING CONDUCTOR. CONDUIT SYSTEM SHALL NOT BE USED AS GROUNDING NETWORK. ALL GROUNDING SHALL BE IN STRICT COMPLIANCE WITH ARTICLE 250 OF THE NATIONAL ELECTRICAL CODE.
9. COORDINATE LOCATION AND VERIFY REQUIREMENTS OF ALL EXTERIOR UTILITY EQUIPMENT AND METER BASE WITH OWNER AND UTILITY COMPANY.
10. TRANSFORMER PAD, TRENCH REQUIREMENTS AND INTERMEDIATE BOX SHALL BE IN ACCORDANCE WITH THE UTILITY COMPANY SPECIFICATIONS. COORDINATE WITH UTILITY COMPANY. PROVIDE AND INSTALL ALL MATERIAL AND EQUIPMENT AS REQUIRED FOR COMPLETE JOB INSTALLATION.
11. ALL SWITCHBOARDS, PANELBOARDS, TRANSFORMERS, DISCONNECT SWITCHES AND OTHER ELECTRICAL DEVICES AND EQUIPMENT SHALL HAVE ENGRAVED NAMEPLATES INDICATING EQUIPMENT IDENTIFICATION TAG AND VOLTAGE, AS WELL AS WHERE DEVICE IS FED FROM. ALL SWITCHBOARDS AND PANELBOARDS SHALL HAVE TYPED DIRECTORIES INDICATING DISTRIBUTION AND BRANCH CIRCUIT FEEDERS.
12. CONTRACTOR IS RESPONSIBLE FOR NATIONAL ELECTRICAL CODE REQUIRED CLEARANCES AROUND AND ABOVE ALL ELECTRICAL EQUIPMENT AND DEVICES.
13. SHORT CIRCUIT AMPERE INTERRUPTING CAPACITY (A.I.C.) RATING OF ALL ELECTRICAL PRODUCTS SHALL BE GREATER THAN THE MAXIMUM AVAILABLE SHORT CIRCUIT CURRENT.
14. PROVIDE AT LEAST ONE SPARE CONDUIT (MINIMUM 2") FOR ALL RECESSED PANELS INTO THE SPACE ABOVE AND BELOW THE CEILING AND FLOOR FOR THE REMAINING CIRCUITS AVAILABLE IN THE PANEL.
15. DO NOT RUN RACEWAYS ON BUILDING EXTERIOR WALLS.
16. WIRE AND CONDUIT SIZES SHALL BE INSTALLED AND SIZED TO COMPENSATE FOR VOLTAGE DROP PER THE NATIONAL ELECTRICAL CODE.
17. FLEXIBLE CONDUIT MAY BE USED ONLY FOR FINAL CONNECTION TO EQUIPMENT (MAXIMUM LENGTH 6'-0").
18. ANY LOOSE FLEXIBLE CONDUIT TO BE STRAPPED DOWN IN A PROFESSIONAL MANNER.
19. ALL ELECTRICAL WIRING, VOICE/COMMUNICATION WIRING AND COAXIAL CABLES SHALL BE INSTALLED IN CONDUIT, WIRE WAY OR OTHER PROTECTIVE COVER AS REQUIRED TO COMPLY WITH GOVERNING CODE.
20. WALL RECEPTACLE CONDUIT SHALL RUN VERTICALLY TO JUNCTION BOX ABOVE CEILING AND NOT HORIZONTALLY THROUGH STUD WALLS, IN ORDER TO FACILITATE FUTURE ACCESS.
21. CONDUCTORS IN UNINSULATED CEILING SPACE AND OUTDOORS SHALL BE DERATED USING A 122 DEGREE (FAHRENHEIT) TEMPERATURE. CONTRACTOR IS RESPONSIBLE FOR REVISING CONDUCTOR SIZES BASED ON CONDUIT RATING.
22. ALL OUTDOOR EQUIPMENT SHALL BE WEATHER PROTECTED, NEMA 3R UNLESS OTHERWISE NOTED.
23. CONTRACTOR SHALL PROVIDE FIRE PROOFING FOR ANY PIPES OR CONDUITS THAT PENETRATE THROUGH ANY FIRE/SMOKE RATED FLOORS, WALLS, CEILINGS, ROOFS OR RUNS INSIDE OF CHASES. FIRE PROOFING METHODS AND MATERIALS SHALL BE AS REQUIRED TO MAINTAIN FIRE/SMOKE RATING OF PARTITION.
24. IF A PROTECTIVE DEVICE RATING IS MARKED ON AN APPLIANCE OR EQUIPMENT, THE BRANCH-CIRCUIT OVERCURRENT DEVICE RATING SHALL NOT EXCEED THE PROTECTIVE DEVICE RATING MARKED ON THE APPLIANCE OR EQUIPMENT.
25. ALL EMERGENCY LIGHTS, NIGHT LIGHTS AND EXIT LIGHTS ARE UNSWITCHED UNLESS OTHERWISE NOTED OR SHOWN.
26. ALL SWITCHES SHALL BE 3" AWAY FROM DOOR TRIM. ALL OCCUPANCY SENSORS SHALL BE PASSIVE INFRARED AND ULTRASONIC TECHNOLOGY TO SENSE OCCUPANCY.
27. PROVIDE 3/4" CONDUIT WITH 200LB TEST NYLON PULL WIRE FROM DATA/TELEPHONE OUTLET BOXES TO 6" ABOVE ACCESSIBLE CEILING.
28. ANY FIRE ALARM COMPONENTS SHOWN ON PLANS ARE FOR REFERENCE ONLY AND MAY BE MINIMAL. PROVIDE AND INSTALL ALL DEVICES AND MATERIALS NECESSARY FOR A COMPLETE FIRE ALARM SYSTEM AS REQUIRED BY THE LOCAL CODES, NFPA AND REGULATIONS.
29. ALL MECHANICAL EQUIPMENT CONTROLS SHALL BE POWERED FROM UNIT.
30. CONTRACTOR SHALL PROVIDE AND INSTALL TWO EMPTY 4" CONDUITS WITH PULL STRING FROM UTILITY TRANSFORMER TO SERVICE ENTRANCE PANEL, IN ADDITION TO SERVICE ENTRANCE CONDUITS SPECIFIED ON PLANS.

HOMERUNS AND BRANCH WIRING FOR 20 AMPS CIRCUITS SHALL BE AS FOLLOWS:

LENGTH	CIRCUIT WIRE SIZE	HOMERUN WIRE SIZE
1FT TO 50FT	N0.12 AWG	N0.12 AWG
51FT TO 75FT	N0.12 AWG	N0.10 AWG
76FT TO 120FT	N0.10 AWG	N0.8 AWG
121FT TO 190FT	N0.10 AWG	N0.6 AWG
191FT TO 300FT	N0.10 AWG	N0.4 AWG

SCOOTER'S COFFEE

GHC Engineers, LLC

Available Fault Current Calculation

Utility Fault Current ____ amperes kVA = 225; E = 208

I = kVA x 1000 = trans. FLA / E x 1.732 — trans. FLA = 625

I_{sca} = trans. FLA x 100 / transformer Z = 625 / 3 % = 20,819 amperes

I_{sca} = ampere short-circuit current RMS symmetrical.

Point to Point Method — Three Phase 208/120

'f' factor = 1.732 x L x I / N x C x E L-N

Length (distance)	FEET	L =	80 — Copper in Nonmetallic Raceway
(ASC)		I_{sca} =	20,819
# conductors per phase		N =	2
Phase conductor constant		C =	13,923 — Phase Conductor 3/0
Volt Line to Line		E L - L =	208 Volt
		f =	0.498
Neutral conductor constant		C =	13,923 — Neutral Conductor 3/0
Volt Line to Neutral		E L - N =	120 Volt
		f =	0.863

Multiplier: M = 1 / 1 + f

Line to Line	M =	0.668
Line to Neutral	M =	0.537

Fault Current at Service Equipment

I_{sca} x M = fault current at terminals of main disconnect L- L = 13,897 amperes

I_{sca} x M = fault current at terminals of main disconnect L- N = 11,173 amperes

Branch Circuit Fault from From Panel to Outlet — Copper in Metal Raceway — Three Phase

Three Phase Branch — 'f' factor = 1.732 x L x I / N x C x E L-N

Length (distance)	L =	15	
(ASC)	I_{sca} =	6,180	Phase 4,077 Neutral
# conductors per phase	N =	1	
Phase conductor constant	C =	617	Phase Conductor 12
Volt Line to Line	E L - L =	208	Volt
	f =	1.251	
Neutral conductor constant	C =	617	Neutral Conductor 12
Volt Line to Neutral	E L - N =	120	Volt
	f =	1.430	

Multiplier: M = 1 / 1 + f

Line to Line	M =	0.444
Line to Neutral	M =	0.411

Isca x M = fault current at terminal of the panel L- L 2,746 amperes

Isca x M = fault current at terminal of the panel L- N 1,676 amperes

Calculation does not include motor contribution

Fault Current from From Service Entrance Disconnect to Panelboard — Copper in Metal Raceway — Three Phase

Three Phase Feeder — 'f' factor = 1.732 x L x I / N x C x E L-N

Length (distance)	L =	50	
(ASC)	I_{sca} =	13,897	Phase 11,173 Neutral
# conductors per phase	N =	1	
Phase conductor constant	C =	4,633	Phase Conductor 3
Volt Line to Line	E L - L =	208	Volt
	f =	1.249	
Neutral conductor constant	C =	4,633	Neutral Conductor 3
Volt Line to Neutral	E L - N =	120	Volt
	f =	1.740	

Multiplier: M = 1 / 1 + f

Line to Line	M =	0.445
Line to Neutral	M =	0.365

Isca x M = fault current at terminal of the panel L- L 6,180 amperes

Isca x M = fault current at terminal of the panel L- N 4,077 amperes

Calculation does not include motor contribution

ONE LINE GENERAL NOTES

A. SES COMPONENTS, INCLUDING OVERCURRENT PROTECTIVE DEVICES SHALL BE FULLY RATED FOR THE AVAILABLE FAULT CURRENT SHOWN.

B. A 42K/10K SERIES RATED SYSTEM IS INTENDED, BASED ON WORST CASE AVAILABLE FAULT FROM THE SES SIZE.

C. PER NEC ARTICLE 240.86(A), PROVIDE IDENTIFICATION AT EACH DISCONNECT MEANS FEEDING DOWNSTREAM DEVICES APPLIED IN SERIES COMBINATION. PROVIDE NOTE INDICATING: "CAUTION - SERIES RATED DEVICES ARE FED FROM THE REMOTE MAIN----AMPS AVAILABLE. IDENTIFIED REPLACEMENT COMPONENT REQUIRED." CONTRACTOR TO FILL IN BLANK WITH AVAILABLE FAULT CURRENT OBTAINED FROM UTILITY COMPANY, OR AS SHOWN ON THE FAULT CURRENT SCHEDULE.

D. PER NEC ARTICLE 110.22, PROVIDE IDENTIFICATION AT ENCLOSURE OF PANELBOARD WHERE BREAKERS ARE APPLIED IN SERIES COMBINATION, STATING: "CAUTION - SERIES COMBINATION SYSTEM RATED ----AMPS AVAILABLE. IDENTIFIED REPLACEMENT COMPONENTS REQUIRED. "CONTRACTOR TO FILL IN BLANK WITH AVAILABLE FAULT CURRENT FROM FAULT CURRENT SCHEDULE OR AS CALCULATED BY A QUALIFIED PERSON APPROVED BY THE AUTHORITY HAVING JURISDICTION USING ACTUAL AVAILABLE FAULT FROM UTILITY COMPANY.

E. PROVIDE ARC FLASH AND SHOCK HAZARD WARMING IDENTIFICATION PER NEC ARTICLE 110.16

F. "NO DESIGN CHANGES MAY BE MADE TO THE SYSTEM WITHOUT THE PRIOR APPROVAL OF THE DESIGN ENGINEER AND THE ELECTRICAL INSPECTOR."

G. THE FEEDER LENGTHS SHOWN IN THE INPUT DATA IS FOR CALCULATIONS ONLY. IT IS NOT THE INTENT TO USE THESE ENTERED LENGTHS FOR USAGE OF ACTUAL FIELD FEEDER LENGTH MEASUREMENTS

PANEL SCHEDULE GENERAL NOTES

A. A.I.C. RATING SHOWN ON PANEL SCHEDULES ARE THE MINIMUM RATING FOR NEW AND REPLACEMENT OVERCURRENT PROTECTIVE DEVICES.

B. ALL PANEL BOARD HAVE A TYPE WRITTEN DIRECTORY IDENTIFYING EACH NUMBERED CIRCUIT PLACED IN A DIRECTORY HOLDER INSIDE THE DOOR.

C. THE CONTRACTOR SHALL PERMANENTLY MARK WITH PERMANENT MARKER THE CIRCUIT IDENTIFICATIONS ON THE COVERPLATES OF RECEPTACLES, EQUIPMENT, AND LIGHTING JUNCTION BOXES. (STICK ON LABELS NOT ACCEPTABLE)

D. PER NEC 210.4(B) ALL MULTIWIRE BRANCH CIRCUITS ARE TO BE PROVIDED WITH A DEVICE THAT WILL DISCONNECT POWER TO ALL UNGROUNDED CONDUCTORS SIMULTANEOUSLY AT THE POINT OF ORIGIN.

SERIES RATING NOTES

A. THE SWITCHGEAR MANUFACTURER SHALL PROVIDE A UL LISTED SERIES-RATED DISTRIBUTION SYSTEM BASED ON THE SHORT-CIRCUIT INFORMATION CONTAINED WITHIN THIS SINGLE-LINE DIAGRAM. IN LIEU OF A LISTED SERIES-RATED DISTRIBUTION SYSTEM THE SWITCHGEAR MANUFACTURER MAY PROVIDE A FULLY RATED SYSTEM BASED ON THE AVAILABLE UTILITY FAULT CURRENT INDICATED ON THE SINGLE-LINE DIAGRAM.

B. THE SERIES-RATED SYSTEM SHALL BE AS NOTED ON SINGLE-LINE DIAGRAM. MOTOR CONTRIBUTION IS LESS THAN 1% ON ALL SERIES-RATED PANELS (U.N.O). NO DESIGN CHANGES MAY BE MADE TO THE SYSTEM WITHOUT THE PRIOR APPROVAL OF THE ELECTRICAL DESIGN CHANGES ENGINEER AND THE ELECTRICAL INSPECTOR. THE MANUFACTURER SHALL PROVIDE THE APPROPRIATE TAGS AND LABELS ON ALL SWITCHBOARDS AND PANELBOARDS AS REQUIRED PER N.E.C. ARCTICLES 110 AND 240, TO IDENTIFY THIS AS A SERIES-RATED system.

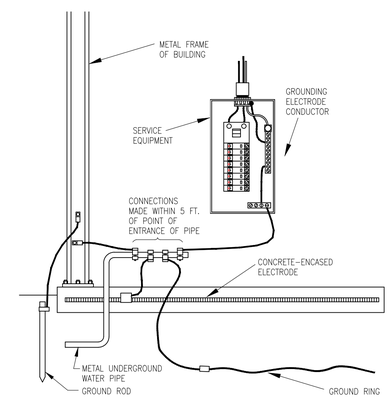

1 GROUNDING ELECTRODE SYSTEM DETAIL
SCALE: NOT TO SCALE

GHA
Architecture / Development
14901 Quorum Drive
Suite 300
Dallas Texas 75254
Ph: (972) 239-8884
Fax: (972) 239-5054

STATE OF MICHIGAN — GRANT REID CLAUSSEN — License No. 6201309682 — LICENSED PROFESSIONAL ENGINEER

12-17-2021

GHC ENGINEERS
Engineering Firm : F-21834
GHC Engineers, LLC
14901 Quorum Dr, Ste 300
Dallas, Texas 75254
Office: 972-239-8884
gclaussen@ghcengineers.com
Project # 621-0959.001

EST. 1998 SCOOTER'S COFFEE

PROJECT ADDRESS:
1490 WEST ANN ARBOR ROAD
PLYMOUTH, MI 48170

REVISIONS:

TITLE:

ELECTRICAL SPECIFICATIONS

DATE: 09/16/2021

PROJECT NO. 210536

- [ ] DESIGN DEVELOPMENT
- [x] PERMIT SUBMITTAL
- [ ] BID PACKAGE
- [ ] CONSTRUCTION ISSUE

SHEET NO.

E1.02

THIS DRAWING AND ITS CONTENTS ARE THE COPYRIGHTED PROPERTY OF GHA ARCHITECTS. USE THEREOF IS LIMITED TO THE SPECIFIC PROJECT AND SITE SET FORTH ABOVE, AND MAY NOT BE OTHERWISE USED OR REPRODUCED, IN WHOLE OR IN PART, WITHOUT THE WRITTEN PERMISSION OF GHA ARCHITECTS, THE ARCHITECT. THIS DRAWING IS TO BE RETURNED UPON REQUEST.

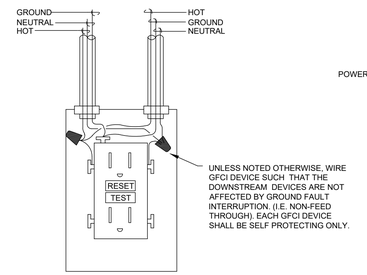

10 GFCI RECEPTACLE DETAIL
SCALE: N.T.S.

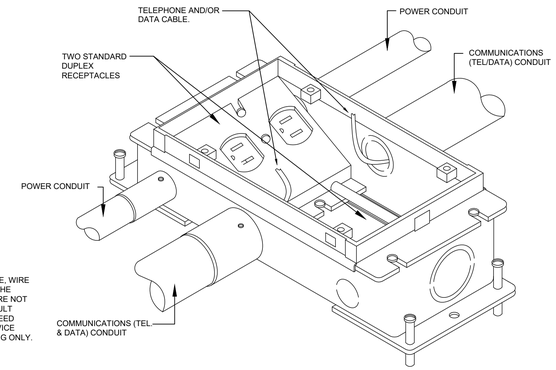

FLANGE AND COVER PLATE SHALL BE BRASS. VERIFY WITH ARCHITECT/OWNER

9 RECEPTACLE/TELE/DATA FLOOR BOX DETAIL
SCALE: N.T.S.

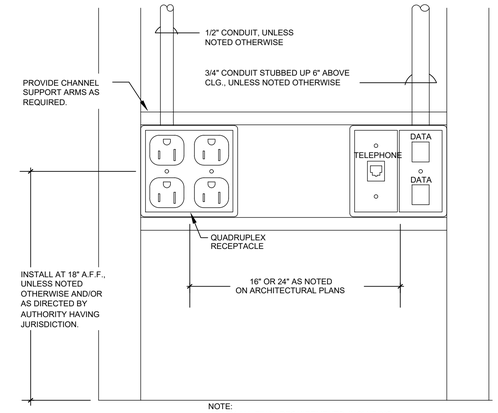

NOTE:
VERIFY ALL FINAL REQUIREMENTS, INCLUDING PHONE AND DATA CONNECTOR TYPES, WITH OWNER PRIOR TO INSTALLATION.

8 RECEPTACLE/TELE/DATA OUTLETS DETAIL
SCALE: N.T.S.

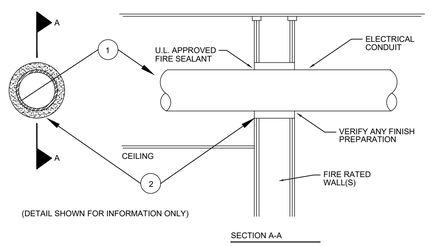

1. THROUGH PENETRANTS - ONE METALLIC PIPE, CONDUIT OR TUBING TO BE CENTERED WITHIN THE FIRESTOP SYSTEM. PIPE, CONDUIT OR TUBING TO BE RIGIDLY SUPPORTED ON BOTH SIDES OF WALL ASSEMBLY. THE FOLLOWING TYPES AND SIZES OF METALLIC PIPES, CONDUITS OR TUBING MAY BE USED:

   A. STEEL PIPE - NOM 4 IN. DIAM (OR SMALLER) SCHEDULE 40 (OR HEAVIER) STEEL PIPE.

   B. CONDUIT - NOM 4 IN. DIAM. (OR SMALLER) ELECTRICAL METALLIC TUBING OR STEEL CONDUIT.

   C. COPPER TUBING - NOM 4 IN. DIAM. (OR SMALLER) TYPE L (OR HEAVIER) COPPER TUBING.

   D. COPPER PIPE - NOM 4 IN. DIAM (OR SMALLER) REGULAR (OR HEAVIER) COPPER PIPE.

2. FILL, VOID OR CAVITY MATERIAL SHALL BE OF NO LESS QUALITY THAN HILTI CONSTRUCTION CHEMICALS, INC. #FS601 SEALANT BEARING THE U.L. CLASSIFICATION MARKING. SEALANT SHALL BE APPLIED A MINIMUM OF 5/8 IN. THICKNESS OF FILL MATERIAL APPLIED WITHIN THE ANNULUS, FLUSH WITH BOTH SURFACES OF WALL.

7 PIPE PENETRATION OF FIRE RATED WALLS
SCALE: N.T.S.

NOTE:
WHERE "#XXX AWG/KCM CU" IS DESIGNATED, USE TABLE 250.66 UNLESS NOTED OTHERWISE.

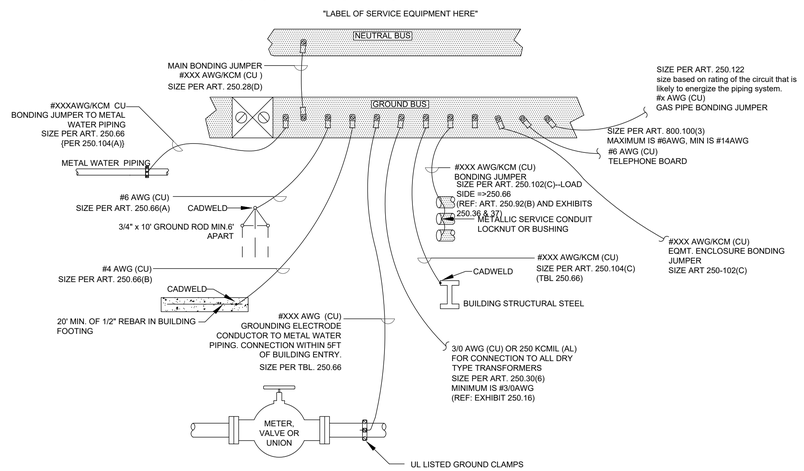

6 SERVICE GROUNDING/ BONDING DETAIL
SCALE: N.T.S.

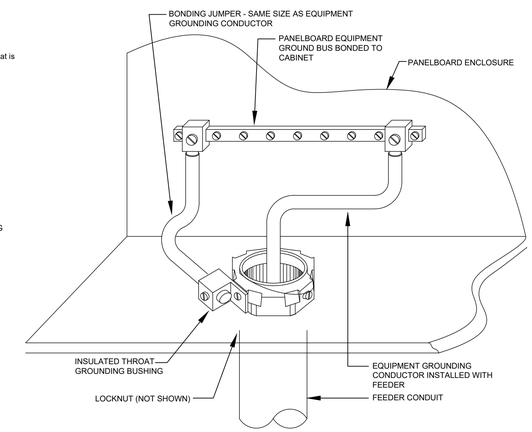

5 PANEL BOARD BONDING DETAIL
SCALE: N.T.S.

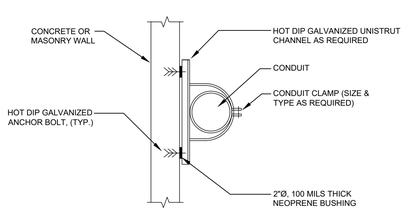

4 TYP CONDUIT SUPPORT DETAIL
SCALE: N.T.S.

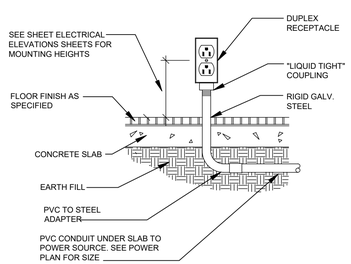

3 TYP CONDUIT STUB-UP DETAIL
SCALE: N.T.S.

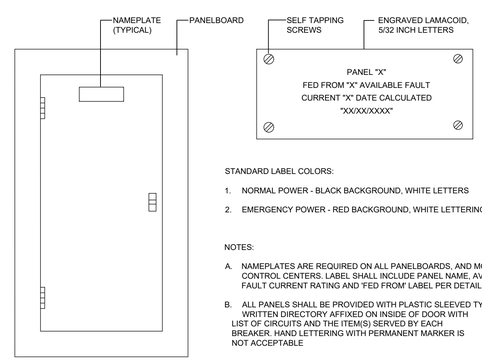

STANDARD LABEL COLORS:

1. NORMAL POWER - BLACK BACKGROUND, WHITE LETTERS
2. EMERGENCY POWER - RED BACKGROUND, WHITE LETTERING

NOTES:

A. NAMEPLATES ARE REQUIRED ON ALL PANELBOARDS, AND MOTOR CONTROL CENTERS. LABEL SHALL INCLUDE PANEL NAME, AVAILABLE FAULT CURRENT RATING AND FED FROM' LABEL PER DETAIL ABOVE.

B. ALL PANELS SHALL BE PROVIDED WITH PLASTIC SLEEVED TYPE WRITTEN DIRECTORY AFFIXED ON INSIDE OF DOOR WITH LIST OF CIRCUITS AND THE ITEM(S) SERVED BY EACH BREAKER. HAND LETTERING WITH PERMANENT MARKER IS NOT ACCEPTABLE

2 PANEL BOARD NAMEPLATE DETAIL
SCALE: N.T.S.

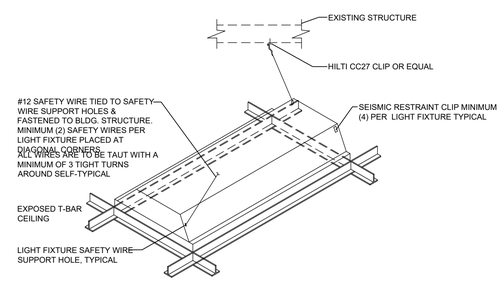

NOTE:
ALL WIRES ARE TO BE TAUT WITH A MINIMUM OF 3 TIGHT TURNS AROUND SELF-TYPICAL

1 TYP RECESSED FIXTURE SUPPORT DETAIL
SCALE: N.T.S.

THIS DRAWING AND ITS CONTENTS ARE THE COPYRIGHTED PROPERTY OF GHA ARCHITECTS. USE THEREOF IS LIMITED TO THE SPECIFIC PROJECT AND SITE SET FORTH ABOVE, AND MAY NOT BE OTHERWISE USED OR REPRODUCED, IN WHOLE OR IN PART, WITHOUT THE WRITTEN PERMISSION OF GHA ARCHITECTS, THE ARCHITECT. THIS DRAWING IS TO BE RETURNED UPON REQUEST.

GHA
Architecture / Development
14901 Quorum Drive
Suite 300
Dallas Texas 75254
Ph: (972) 239-8884
Fax: (972) 239-5054

STATE OF MICHIGAN
GRANT REID CLAUSSEN
License No. 6201309682
LICENSED PROFESSIONAL ENGINEER

12-17-2021

Engineering Firm : F-21834
GHC Engineers, LLC
14901 Quorum Dr, Ste 300
Dallas, Texas 75254
Office: 972-239-8884
gclaussen@ghcengineers.com
Project # G21-0959.001

EST. 1998 SCOOTER'S COFFEE

PROJECT ADDRESS:
1490 WEST ANN ARBOR ROAD
PLYMOUTH, MI 48170

REVISIONS:

TITLE:
ELECTRICAL DETAILS

DATE:
09/16/2021

PROJECT NO.
210536

- [ ] DESIGN DEVELOPMENT
- [x] PERMIT SUBMITTAL
- [ ] BID PACKAGE
- [ ] CONSTRUCTION ISSUE

SHEET NO.
E1.03

COM*check* Software Version 4.1.5.1

Interior Lighting Compliance Certificate

Project Information

Energy Code: 2015 IECC
Project Title: SCOOTER'S COFFEE
Project Type: New Construction

Construction Site:
1490 West Ann Arbor Rd.
Plymouth, MI 48170

Owner/Agent:
SCOOTER'S COFFEE

Designer/Contractor:
GRANT CLAUSSEN
GHC ENGINEERS
14901 QUORUM DR.
STE 300
DALLAS, TX 75254
9722398884
gclaussen@ghcengineers.com

Additional Efficiency Package(s)

On-site Renewable Energy

Allowed Interior Lighting Power

A Area Category	B Floor Area (ft2)	C Allowed Watts / ft2	D Allowed Watts (B X C)
1-Common Space Types:Food Preparation	694	1.21	840
		Total Allowed Watts =	840

Proposed Interior Lighting Power

A Fixture ID : Description / Lamp / Wattage Per Lamp / Ballast	B Lamps/ Fixture	C # of Fixtures	D Fixture Watt.	E (C X D)
1-Common Space Types:Food Preparation				
LED 1: T1: 2X4 LED Panel: LED Panel 40W:	1	8	40	320
			Total Proposed Watts =	320

Interior Lighting PASSES: Design 62% better than code

Interior Lighting Compliance Statement

Compliance Statement: The proposed interior lighting design represented in this document is consistent with the building plans, specifications, and other calculations submitted with this permit application. The proposed interior lighting systems have been designed to meet the 2015 IECC requirements in COM*check* Version 4.1.5.1 and to comply with any applicable mandatory requirements listed in the Inspection Checklist.

Grant R. Claussen P.E. — Name - Title
Signature
12/17/2021 — Date

COM*check* Software Version 4.1.5.1

Exterior Lighting Compliance Certificate

Project Information

Energy Code: 2015 IECC
Project Title: SCOOTER'S COFFEE
Project Type: New Construction
Exterior Lighting Zone 3 (Other)

Construction Site:
1490 West Ann Arbor Rd.
Plymouth, MI 48170

Owner/Agent:
SCOOTER'S COFFEE

Designer/Contractor:
GRANT CLAUSSEN
GHC ENGINEERS
14901 QUORUM DR.
STE 300
DALLAS, TX 75254
9722398884
gclaussen@ghcengineers.com

Allowed Exterior Lighting Power

A Area/Surface Category	B Quantity	C Allowed Watts / Unit	D Tradable Wattage	E Allowed Watts (B X C)
Entry Canopy (Illuminated area of facade wall or surface)	627 ft2	0.15	No	94
			Total Tradable Watts (a) =	514
			Total Allowed Watts =	608
			Total Allowed Supplemental Watts (b) =	750

(a) Wattage tradeoffs are only allowed between tradable areas/surfaces.
(b) A supplemental allowance equal to 750 watts may be applied toward compliance of both non-tradable and tradable areas/surfaces.

Proposed Exterior Lighting Power

A Fixture ID : Description / Lamp / Wattage Per Lamp / Ballast	B Lamps/ Fixture	C # of Fixtures	D Fixture Watt.	E (C X D)
Entry Canopy (Illuminated area of facade wall or surface 627 ft2): Non-tradable Wattage				
LED 1: A: Exterior Wall Sconce: Other:	1	7	12	83
Parking area (5138 ft2): Tradable Wattage				
			Total Tradable Proposed Watts =	0

Exterior Lighting PASSES: Design 100% better than code

Exterior Lighting Compliance Statement

Compliance Statement: The proposed exterior lighting design represented in this document is consistent with the building plans, specifications, and other calculations submitted with this permit application. The proposed exterior lighting systems have been designed to meet the 2015 IECC requirements in COM*check* Version 4.1.5.1 and to comply with any applicable mandatory requirements listed in the Inspection Checklist.

Grant R. Claussen P.E. — Name - Title
Signature
12/17/2021 — Date

COM*check* Software Version 4.1.5.1

Inspection Checklist

Energy Code: 2015 IECC

Requirements: 100.0% were addressed directly in the COM*check* software

Text in the "Comments/Assumptions" column is provided by the user in the COMcheck Requirements screen. For each requirement, the user certifies that a code requirement will be met and how that is documented, or that an exception is being claimed. Where compliance is itemized in a separate table, a reference to that table is provided.

Section # & Req.ID	Plan Review	Complies?	Comments/Assumptions
C103.2 [PR4][1]	Plans, specifications, and/or calculations provide all information with which compliance can be determined for the interior lighting and electrical systems and equipment and document where exceptions to the standard are claimed. Information provided should include interior lighting power calculations, wattage of bulbs and ballasts, transformers and control devices.	☐Complies ☐Does Not ☐Not Observable ☐Not Applicable	Requirement will be met.
C103.2 [PR8][1]	Plans, specifications, and/or calculations provide all information with which compliance can be determined for the exterior lighting and electrical systems and equipment and document where exceptions to the standard are claimed. Information provided should include exterior lighting power calculations, wattage of bulbs and ballasts, transformers and control devices.	☐Complies ☐Does Not ☐Not Observable ☐Not Applicable	Requirement will be met.
C406 [PR9][1]	Plans, specifications, and/or calculations provide all information with which compliance can be determined for the additional energy efficiency package options.	☐Complies ☐Does Not ☐Not Observable ☐Not Applicable	Requirement will be met.

Additional Comments/Assumptions:

1 High Impact (Tier 1) | 2 Medium Impact (Tier 2) | 3 Low Impact (Tier 3)

Section # & Req.ID	Rough-In Electrical Inspection	Complies?	Comments/Assumptions
C405.2.1 [EL15][1]	Lighting controls installed to uniformly reduce the lighting load by at least 50%.	☐Complies ☐Does Not ☐Not Observable ☐Not Applicable	Requirement will be met.
C405.2.1 [EL18][1]	Occupancy sensors installed in required spaces.	☐Complies ☐Does Not ☐Not Observable ☐Not Applicable	Requirement will be met.
C405.2.1, C405.2.2.3 [EL23][2]	Independent lighting controls installed per approved lighting plans and all manual controls readily accessible and visible to occupants.	☐Complies ☐Does Not ☐Not Observable ☐Not Applicable	Requirement will be met.
C405.2.2.1 [EL22][2]	Automatic controls to shut off all building lighting installed in all buildings.	☐Complies ☐Does Not ☐Not Observable ☐Not Applicable	Requirement will be met.
C405.2.3 [EL16][2]	Daylight zones provided with individual controls that control the lights independent of general area lighting.	☐Complies ☐Does Not ☐Not Observable ☐Not Applicable	Requirement will be met.
C405.2.3, C405.2.3.1, C405.2.3.2 [EL20][1]	Primary sidelighted areas are equipped with required lighting controls.	☐Complies ☐Does Not ☐Not Observable ☐Not Applicable	Requirement will be met.
C405.2.3, C405.2.3.1, C405.2.3.3 [EL21][1]	Enclosed spaces with daylight area under skylights and rooftop monitors are equipped with required lighting controls.	☐Complies ☐Does Not ☐Not Observable ☐Not Applicable	**Exception:** Requirement does not apply.
C405.2.4 [EL4][1]	Separate lighting control devices for specific uses installed per approved lighting plans.	☐Complies ☐Does Not ☐Not Observable ☐Not Applicable	Requirement will be met.
C405.2.4 [EL8][1]	Additional interior lighting power allowed for special functions per the approved lighting plans and is automatically controlled and separated from general lighting.	☐Complies ☐Does Not ☐Not Observable ☐Not Applicable	Requirement will be met.
C405.2.5 [EL25][1][2]	Automatic lighting controls for exterior lighting installed. Controls will be daylight controlled, set based on business operation time-of-day, or reduce connected lighting > 30%.	☐Complies ☐Does Not ☐Not Observable ☐Not Applicable	Requirement will be met.
C405.3 [EL6][1]	Exit signs do not exceed 5 watts per face.	☐Complies ☐Does Not ☐Not Observable ☐Not Applicable	Requirement will be met.

Additional Comments/Assumptions:

1 High Impact (Tier 1) | 2 Medium Impact (Tier 2) | 3 Low Impact (Tier 3)

Section # & Req.ID	Final Inspection	Complies?	Comments/Assumptions
C303.3, C408.2.5.2 [FI17][3]	Furnished O&M instructions for systems and equipment to the building owner or designated representative.	☐Complies ☐Does Not ☐Not Observable ☐Not Applicable	Requirement will be met.
C405.4.1 [FI18][3]	Interior installed lamp and fixture lighting power is consistent with what is shown on the approved lighting plans, demonstrating proposed watts are less than or equal to allowed watts.	☐Complies ☐Does Not ☐Not Observable ☐Not Applicable	*See the Interior Lighting fixture schedule for values.*
C405.5.1 [FI19][3]	Exterior lighting power is consistent with what is shown on the approved lighting plans, demonstrating proposed watts are less than or equal to allowed watts.	☐Complies ☐Does Not ☐Not Observable ☐Not Applicable	*See the Exterior Lighting fixture schedule for values.*
C408.2.5.1 [FI16][3]	Furnished as-built drawings for electric power systems within 90 days of system acceptance.	☐Complies ☐Does Not ☐Not Observable ☐Not Applicable	Requirement will be met.
C408.3 [FI33][1]	Lighting systems have been tested to ensure proper calibration, adjustment, programming, and operation.	☐Complies ☐Does Not ☐Not Observable ☐Not Applicable	Requirement will be met.

Additional Comments/Assumptions:

1 High Impact (Tier 1) | 2 Medium Impact (Tier 2) | 3 Low Impact (Tier 3)

THIS DRAWING AND ITS CONTENTS ARE THE COPYRIGHTED PROPERTY OF GHA ARCHITECTS. USE THEREOF IS LIMITED TO THE SPECIFIC PROJECT AND SITE SET FORTH ABOVE, AND MAY NOT BE OTHERWISE USED OR REPRODUCED, IN WHOLE OR IN PART, WITHOUT THE WRITTEN PERMISSION OF GHA ARCHITECTS. THE ARCHITECT, THIS DRAWING IS TO BE RETURNED UPON REQUEST.

GHA
Architecture / Development
14901 Quorum Drive
Suite 300
Dallas Texas 75254
Ph: (972) 239-8884
Fax: (972) 239-5054

STATE OF MICHIGAN — GRANT REID CLAUSSEN — License No. 6201309682 — LICENSED PROFESSIONAL ENGINEER

12-17-2021

Engineering Firm : F-21834
GHC Engineers, LLC
14901 Quorum Dr, Ste 300
Dallas, Texas 75254
Office: 972-239-8884
gclaussen@ghcengineers.com
Project # G21-0959.001

EST. 1998 SCOOTER'S COFFEE

PROJECT ADDRESS:
1490 WEST ANN ARBOR ROAD
PLYMOUTH, MI 48170

REVISIONS:

TITLE:
ELECTRICAL COMCHECK

DATE:
09/16/2021

PROJECT NO.
210536

- ☐ DESIGN DEVELOPMENT
- ☒ PERMIT SUBMITTAL
- ☐ BID PACKAGE
- ☐ CONSTRUCTION ISSUE

SHEET NO.
E1.04

THIS DRAWING AND ITS CONTENTS ARE THE COPYRIGHTED PROPERTY OF GHA ARCHITECTS. USE THEREOF IS LIMITED TO THE SPECIFIC PROJECT AND SITE SET FORTH ABOVE, AND MAY NOT BE OTHERWISE USED OR REPRODUCED, IN WHOLE OR IN PART, WITHOUT THE WRITTEN PERMISSION OF GHA ARCHITECTS, THE ARCHITECT. THIS DRAWING IS TO BE RETURNED UPON REQUEST.

LIGHTING SCHEDULE

CALLOUT	SYMBOL	LAMP	MANUFACTURE MODEL NUMBER	DESCRIPTION	BALLAST	MOUNTING	WATTAGE VOLTAGE
A		(1) 11.8W LED	BEST LIGHTING LED WPCA 12W-3K	EXTERIOR WALL SCONCE	ELECTRONIC	WALL	120 1P 2W
B	J	2.9W/ FT LED	NOVA FLEX NF/SP-PROW-120-24V-3000K	PRO 120 SERIES - IP68 LED STRIP LIGHT, VERIFY LENGTH AND HARDWIRE CONNECTIONS PRIOR TO ORDERING, TO BE PLACED ON DIMMER SWITCH	LED	SURFACE	120 1P 2W
EM1		(2) 3.3W INCLUDED	BEST LIGHTING RMR-16-LED	MR-16 SEMI-RECESSED THERMOPLASTIC EMERGENCY UNIT.	N/A	WALL	120 1P 2W
EM2		(2) 6W LED	BEST LIGHTING DBEL-ACEM-HL-B-SDI-CW-PC	LED DECORATIVE OUTDOOR DIE-CAST AC/EMERGENCY UNIT.	N/A	WALL	120 1P 2W
T1		(1) 40W LED	AEL C2435MM	LED 2X4 PANEL LIGHTING, DIMMABLE.	ELECTRONIC	RECESSED	120 1P 2W
X1		(2) 1W INCLUDED	BEST LIGHTING LEDCXTEU-2-R-W	LED EXIT SIGN/ EMERGENCY UNIT COMBO.	N/A	CEILING	120 1P 2W
FL		(1) 35W LED	KITCHLER NSP 10 TO 15 - 16209	GROUND MOUNT LED FLAG POLE LIGHT FIXTURE	LED	STANCHION GROUND	120 1P 2W
P3		(1) 137W LED	LITHONIA LIGHTING DSX0 LED P6 30K T3M MVOLT	LED POLE LIGHT FIXTURES. W/ HOUSESIDE SHIELD	ELECTRONIC	25' SQUARE AL POLE BASE DETAIL ON STRUCTURE SHEET	120 1P 2W

NOTES:

1. ALL FIXTURE FINISHES AND OPTIONS MUST BE APPROVED BY OWNER OR ARCHITECT.
2. ADDITIONAL LIGHT SWITCHES MAY BE INSTALLED IF APPROVED BY OWNER OR ARCHITECT.
3. ALL EMERGENCY LIGHTING SHALL BE POWERED WITH CIRCUIT "XXX".
4. LIGHTING SUPPLIER AND CONTRACTOR ENSURE ALL LIGHTING CONTROLS INCLUDING EXPOSED TO PLENUM EXPOSED TO PLENUM IS PLENUM RATED.
5. CONTRACTOR TO COORDINATE ALL LIGHTING/DIMING CONTROLS AND LIGHTING SPECIFICATIONS WITH CONTROLS VENDOR PRIOR TO TO ORDERING TO ENSURE CORRECT COMPONENTS.
6. GENERAL CONTRACTOR TO CONTACT NATIONAL LIGHTING SUPPLIER @ SCOOTER@FSGI.COM

NOTES BY SYMBOL (X)

1. PROVIDE DIMMING SWITCH ON WALL FOR EXTERIOR LED STRIP LIGHTING. COORDINATE EXACT LOCATION WITH OWNER/ ARCHITECT PRIOR TO INSTALLATION.
2. EMERGENCY EGRESS LIGHT SHALL BE CIRCUITED TO UNSWITCHED LEG OF LOCAL LIGHT CIRCUIT.
3. PROVIDE LIGHT SWITCH ON WALL FOR EXTERIOR WALL/ SITE FIXTURE. COORDINATE EXACT LOCATION WITH OWNER/ ARCHITECT PRIOR TO INSTALLATION
4. PROVIDE SWITCH ON WALL FOR ILLUMINATED MONUMENT SIGN AND BUILDING SIGNS COORDINATE EXACT LOCATION WITH OWNER/ ARCHITECT PRIOR TO INSTALLATION.
5. PROVIDE SWITCH ON WALL FOR ILLUMINATED MENU BOARD/ SPEAKER. COORDINATE EXACT LOCATION WITH OWNER/ ARCHITECT PRIOR TO INSTALLATION. VERIFY EXACT POWER REQUIREMENTS PRIOR TO ROUGH-IN.
6. EXIT LIGHT SHALL BE CIRCUITED TO UNSWITCHED LEG OF LOCAL LIGHT CIRCUIT. PROVIDE CHEVRONS AS NEEDED.

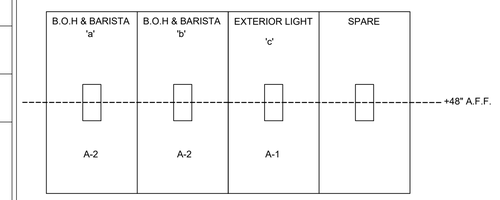

3 SWITCHBANK DETAIL
SCALE: NOT TO SCALE

LIGHTING CONTROL DEVICE SCHEDULE

CALLOUT	SYMBOL	MANUFACTURE MODEL NUMBER	UNOBSTRUCTED RATED COVERAGE	MOUNTING	WATTAGE VOLTAGE	TIME DELAY	DESCRIPTION
OCCUPANCY SENSOR SWITCH	$OS	nLIGHT WSX-PDT	--	CEILING	--	--	LINE VOLTAGE SWITCH DUAL TECHNOLOGY SENSOR
DIMMER SWITCH	$D	ACUITY CONTROLS sPODMRD	--	WALL	LINE	--	LINE VOLTAGE PUSH BUTTON SWITCH POD ON/OFF
TOGGLE SWITCH	$	HUBBEL #1221	--	WALL	LOW	--	

NOTES:
1. SENSOR REQUIRES POWER PACK (INSTALL IN ACCESSIBLE LOCATION)
2. SWIVEL MOUNTING BRACKET INCLUDED
3. ELECTRICAL CONTRACTOR SHALL COORDINATE COMPATIBILITY OF LIGHT FIXTURES AND LIGHTING CONTROL DEVICES/ SYSTEM WITH CONTROL SYSTEM SUPPLIER PRIOR TO ORDERING/ ROUGH-IN
4. VERIFY POWER REQUIREMENT FOR CEILING SENSOR. IF IT REQUIRES CONTINUOUS HOT, PULL UNDIMMED WIRE FROM AHEAD OF DIMMER SWITCH TO CEILING SENSOR FOR SENSOR OPERATING, AND RUN DIMMED LINE THROUGH SENSOR FOR ON/OFF CONTROL. CONFIRM WITH VENDOR PRIOR TO ORDERING SENSOR TO ENSURE COMPATIBILITY.

TIMECLOCK SEQUENCE OF OPERATION

1. EXTERIOR SIGN SHALL TURN ON AT 4:30AM.
2. TOILET EXHAUST SHALL ENERGIXE AT 5AM.
3. EXTERIOR SIGN SHALL TURN OFF 30- MINUTES AFTER SUNRISE.
4. EXTERIOR SIGNAGE SHALL TURN ON 30-MINUTES BEFORE SUNSET.
5. TOILET EXHAUST SHALL SHUT OFF AT 10PM.
6. EXTERIOR SIGNAGE SHALL TURN OFF AT 10:30PM.

ALL TIMES ARE ADJUSTABLE.

LIGHTING GENERAL NOTES

A. ELECTRICAL CONTRACTOR SHALL FIELD VERIFY ALL EXISTING CONDITIONS PRIOR TO BASE BID. IN CASE OF ANY DISCREPANCIES WITH EXISTING FIELD CONDITIONS, ELECTRICAL CONTRACTOR SHALL VERIFY THE EXACT DIFFERENCE FOR POSSIBLE REVISIONS TO THIS DOCUMENT.

B. INSTALL RECESSED LUMINAIRES USING ACCESSORIES AND FIRE STOPPING MATERIALS TO MEET REGULATORY REQUIREMENTS FOR FIRE RATING.

C. ALL FLUORESCENT LIGHT FIXTURES THAT UTILIZE DOUBLE ENDED LAMPS AND CONTAIN BALLAST(S) THAT CAN BE SERVICED IN PLACE SHALL BE CODE COMPLIANT WITH N.E.C 410.130(G)

D. COORDINATE ALL EXTERIOR BUILDING MOUNTED LIGHT FIXTURES WITH ARCHITECTURAL BUILDING ELEVATIONS FOR HEIGHTS AND LOCATIONS.

E. PROVIDE EXIT SIGNS FOR ALL EXISTS DESIGNATED BY THE CODE STUDY PLAN. REFER TO ARCHITECTURAL CODE PLANS FOR LOCATIONS AND REQUIREMENTS.

F. CONDUIT AND WIRING SHOWN FOR REFERENCE ONLY. IT IS THE RESPONSIBILITY OF THE ELECTRICAL CONTRACTOR TO PROVIDE THE NUMBER OF CONDUCTOR REQUIRED FOR HOT-LEGS, NEUTRAL AND GROUNDING AT EACH DEVICE FOR PROPER BRANCH CIRCUITING SHOWN FOR EACH AREA OR ROOM.

G. ALL EMERGENCY/EXIT FIXTURES AND ARE TO BE PROVIDED WITH MINIMUM 90 MIN EMERGENCY BATTERY BACK-UP. BYPASS ENERGY MANAGEMENT SYSTEM WHERE REQUIRED.

H. WHEN REQUIRED, IT IS THE OWNER'S RESPONSIBILITY TO CONTRACT WITH A COMMISSIONING AUTHORITY TO COMPLY WITH LOCAL CODES.

I. THIS DRAWING IS TO BE READ IN CONJUNCTION WITH ALL OTHER DISCIPLINES DRAWINGS. ANY DISCREPANCIES ARE TO BE BROUGHT TO THE ATTENTION OF THE ARCHITECTS AND ENGINEERS PRIOR TO FINAL BID CLOSING.

GENERAL NOTE

PROVIDE STRUCTURE ENGINEERING LETTER OF APPROVAL FOR SEISMIC INSTALLATION SUPPORT PRIOR TO INSTALLATION AND AT COMMISSIONING STAGE. ALL EQUIPMENT SEISMIC SUPPORT AND INSTALLATION METHOD MUST BE SUBMITTED TO STRUCTURE ENGINEERING APPROVAL PRIOR TO INSTALLATION.

IECC 2015

IECC 2015 APPLIANCE NOTES:
1. THE UNDER-COUNTER REFRIGERATION SHALL MEET THE STANDARDS FOR EFFICIENCY, PER IECC 2015, TABLE C4033.2.14. NOTE THAT THE ENERGY STAR REFRIGERATORS AND FREEZERS ARE 10% MORE EFFICIENT THAN MINIMUM FEDERAL EFFICIENCY STANDARDS FOR SUCH PRODUCTS. THEREBY THEY SHOULD MEET THIS REQUIREMENT.

IECC 2015 ELECTRICAL NOTES:
1. DAYLIGHTING REQUIRED FOR ROOMS WITH EXTERNAL WINDOWS AND 150 WATTS OR MORE OF INSTALLED LIGHTING. DAYLIGHT ZONE SHALL REACH INTO SPACE AS FAR AS THE HEIGHT OF THE TOP OF THE WINDOW SILL.
2. ALL BUILDING LIGHTING NOT CONTROLLED BY AN OCCUPANCY SENSOR (AND NOT IN AN EQUIPMENT ROOM) SHALL BE CONTROLLED BY THE BUILDING LIGHTING TIMER, AND IT SHALL BE SET AND LABELED TO BE OFF DURING NON-OCCUPIED HOURS.

IECC 2015 ELECTRICAL COMMISSIONING NOTES:
1. ELECTRICAL COMMISSIONING IS REQUIRED. COMMISSIONING SHALL BE PER IECC 2015 C408.3 (LIGHTING SYSTEMS).

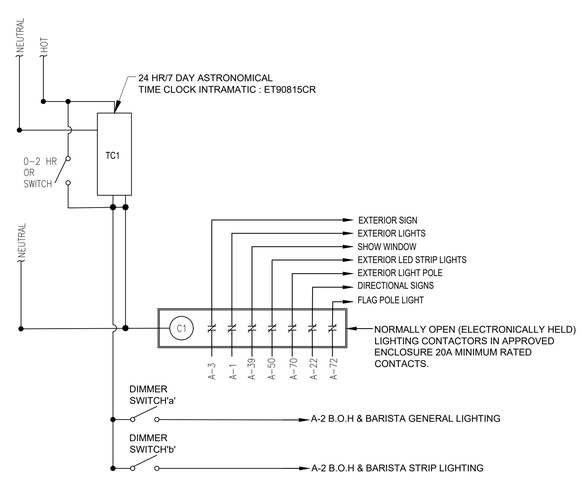

2 TIME CLOCK DIAGRAM
SCALE: NOT TO SCALE

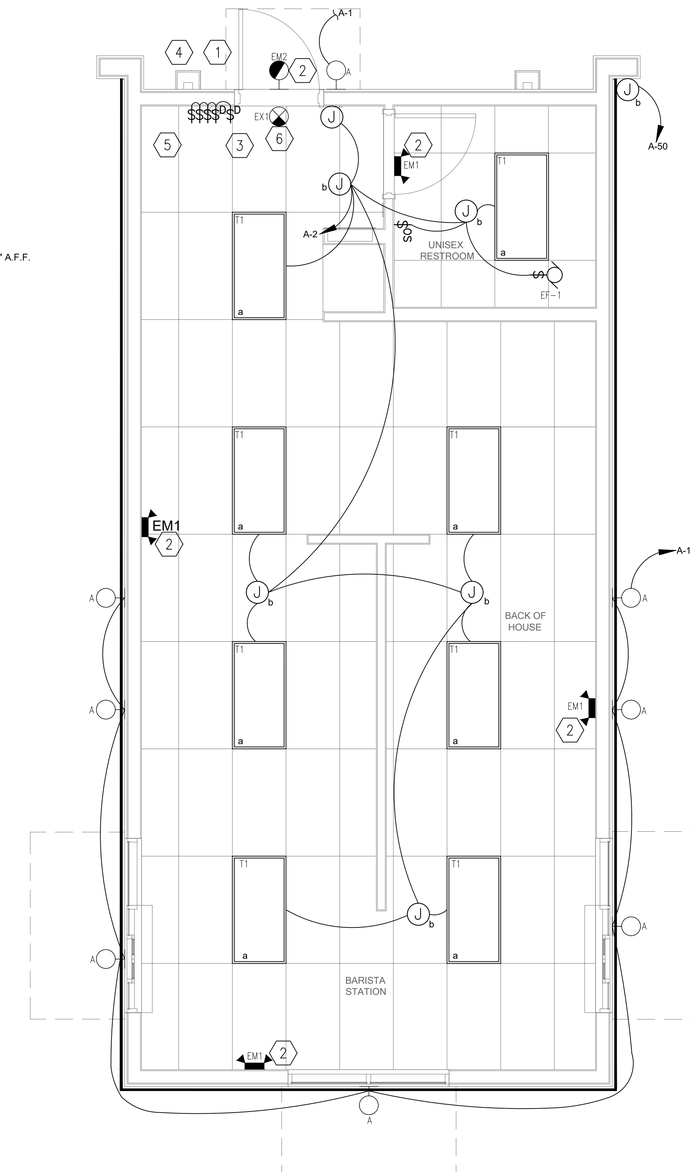

1 LIGHTING FLOOR PLAN
SCALE: 3/8" = 1'-0"

GHA
Architecture / Development
14901 Quorum Drive
Suite 300
Dallas Texas 75254
Ph: (972) 239-8884
Fax: (972) 239-5054

STATE OF MICHIGAN
GRANT REID CLAUSSEN
License No. 6201309682
LICENSED PROFESSIONAL ENGINEER

12-17-2021

Engineering Firm : F-21834
GHC Engineers, LLC
14901 Quorum Dr, Ste 300
Dallas, Texas 75254
Office: 972-239-8884
gclaussen@ghcengineers.com
Project # G21-0959.001

EST. 1998 SCOOTER'S COFFEE

PROJECT ADDRESS:
1490 WEST ANN ARBOR ROAD
PLYMOUTH, MI 48170

REVISIONS:

TITLE:
LIGHTING FLOOR PLAN & SCHEDULE

DATE:
09/16/2021

PROJECT NO.
210536

- [ ] DESIGN DEVELOPMENT
- [x] PERMIT SUBMITTAL
- [ ] BID PACKAGE
- [ ] CONSTRUCTION ISSUE

SHEET NO.
E2.01

THIS DRAWING AND ITS CONTENTS ARE THE COPYRIGHTED PROPERTY OF GHA ARCHITECTS USE THEREOF IS LIMITED TO THE SPECIFIC PROJECT AND SITE SET FORTH ABOVE, AND MAY NOT BE OTHERWISE USED OR REPRODUCED, IN WHOLE OR IN PART, WITHOUT THE WRITTEN PERMISSION OF GHA ARCHITECTS, THE ARCHITECT. THIS DRAWING IS TO BE RETURNED UPON REQUEST.

KITCHEN EQUIPMENT SCHEDULE

CALLOUT	DESCRIPTION	SYMBOL	VOLTS	AMPS	MOCP	WIRE CALLOUT	NOTES
1	BEVERAGE BLENDER		120 1P 2W	15.0	20	2#12, #12G, 3/4"C	+48" A.F.F.
2	ICE MAKER		120 1P 2W	15.2	20	2#12, #12G, 3/4"C	+60" A.F.F.
3	HIGH SPEED OVEN		240 2P 2W	25.0	30	2#12, #12G, 3/4"C	+48" A.F.F.
4A	U/C REFRIGERATOR (48")		120 1P 2W	5.0	20	2#12, #12G, 3/4"C	+18" A.F.F. NEMA 5-15P
4B	U/C REFRIGERATOR (60")		120 1P 2W	6.6	20	2#12, #12G, 3/4"C	+18" A.F.F. NEMA 5-15P
4C	U/C REFRIGERATOR (36")		120 1P 2W	6.6	20	2#12, #12G, 3/4"C	+18" A.F.F. NEMA 5-15P
4E	U/C REFRIGERATOR (24")		120 1P 2W	2.3	20	2#12, #12G, 3/4"C	+18" A.F.F. NEMA 5-15P
5	COFFEE GRINDER		120 1P 2W	11.0	20	2#12, #12G, 3/4"C	+30" A.F.F. NEMA 5-15P
6	COFFEE BREWER		240 2P 2W	24.0	30	2#10, #10G, 3/4"C	+24" A.F.F. NEMA 5-15P, 6-30P/R. ELECTRICAN SHALL PROVIDE RECEPTACLE AND END WHIP.
8	POS TERMINAL W/ PRINTER		120 1P 2W	15.0	20	2#12, #12G, 3/4"C	+30" A.F.F. NEMA 5-15P, PROVIDE (2) CAT5 DATA LINES PER POS AND ONE CAT DATA LINE AT ORDER SCREEN.
9	ESPRESSO MACHINE		240 2P 2W	30.0	30	2#10, #10G, 3/4"C	+48" A.F.F. GC TO PROVIDE BUCK BOOST TRANSFORMER WHERE APPLICABLE TO ACHIEVE 208 VOLTAGE FOR EQUIPMENT USE.
13	REACH-IN REFRIGERATOR (2 DOOR)		120 1P 2W	7.0	20	2#12, #12G, 3/4"C	+48" A.F.F. NEMA 5-15P
14A	REACH-IN FREEZER (1 DOOR)		120 1P 2W	9.6	20	2#12, #12G, 3/4"C	+18" A.F.F. NEMA 5-15P
14B	REACH-IN FREEZER (2 DOOR)		120 1P 2W	12	20	2#12, #12G, 3/4"C	+48" A.F.F. NEMA 5-15P
25	WATER TREATMENT SYSTEM		120 1P 2W	5.0	20	2#12, #12G, 3/4"C	VERIFY PROCESSOR 120V, 6W, RP 120V, 2W
25A	WATER STORAGE TANK & PUMP	J	120 1P 2W	2.0	20	2#12, #12G, 3/4"C	+84" A.F.F.
26	ZOOM TIMER		120 1P 2W	2.5	20	2#12, #12G, 3/4"C	+84" A.F.F.
30	DRIVE-THRU ORDER MONITOR		120 1P 2W	8.0	20	2#12, #12G, 3/4"C	72" A.F.F. DEDICATED CIRCUIT
A	CONVENIENCE OUTLET (+48" AFF)		120 1P 2W	15.0	20	2#12, #12G, 3/4"C	MOUNT HORIZONTALLY AS NEEDED
B	CONVENIENCE OUTLET (+108" AFF)		120 1P 2W	15.0	20	2#12, #12G, 3/4"C	MOUNT HORIZONTALLY AS NEEDED
C	CONVENIENCE OUTLET (+42" AFF)		120 1P 2W	15.0	20	2#12, #12G, 3/4"C	MOUNT HORIZONTALLY AS NEEDED

NOTES:

THE ELECTRICAL CONTRACTOR SHALL VERIFY ROUGH-IN REQUIREMENTS, LOCATIONS, MOUNTING HEIGHTS, VOLTAGE, PHASE, AMPS, HP, KW, ETC. FOR ALL EQUIPMENT.

MECHANICAL EQUIPMENT SCHEDULE

CALLOUT	DESCRIPTION	SYMBOL	VOLTS	FLA	MCA	MOCP	WIRE CALLOUT	NOTES
EF-1	EXHAUST FAN	M	120 1P 2W	0.67		20	2#12, #12G, 3/4"C	PROVIDE MANUAL, MOTOR RATED, NEMA-3R, TOGGLE SWITCH FOR DISCONNECTING MEANS. INTERLOCK FAN WITH RESTROOM LIGHT SWITCH
RTU-1	ROOF TOP UNIT		240 1P 2W		66	70	3#4, #8G, 1"C	PROVIDE 100A/3P NEMA 3R DISCONNECT SWITCH FUSED PER UNIT NAMEPLATE.
WH-1	WATER HEATER		240 1P 2W	39		50	2#8, #10G, 3/4"C	PROVIDE 60A/2P NEMA 3R NON-FUSED DISCONNECT SWITCH

NOTES BY SYMBOL (X)

1. PROVIDE DATA RACK RECEPTACLE MOUNTED ABOVE PANEL AT 108" A.F.F. COORDINATE EXACT LOCATION WITH OWNER/ ARCHITECT PRIOR TO INSTALLATION. PANEL MAINTAIN 3'-0" FRONT WORKING CLEARANCE.
2. SHOW WINDOWS RECEPTACLE TO BE INSTALLED PER N.E.C. 210.62 & 220.14(G).
3. HVAC CONVENIENCE OUTLET(S) AND DISCONNECT(S) SHALL BE PROVIDED AND INSTALLED BY ELECTRICAL CONTRACTOR, SIZE TO MATCH BREAKERS ON PANEL AND/OR NAMEPLATE PROVIDE.
4. PROVIDE 120V CONNECTION TO DUCT SMOKE DETECTORS INTERLOCK FOR SIMULTANEOUS UNIT SHOUT-DOWN WITHIN 30 SECONDS OR LESS. VERIFY FINAL CONNECTION LOCATION AND REQUIREMENTS WITH MECHANICAL CONTRACTOR..
5. CONTRACTOR SHALL COORDINATE ALL REQUIREMENTS AND QUANTITY FOR ELECTRICAL AND BLOCKING/ MOUNTING WITH SIGN PROVIDER AND PROVIDE AS NECESSARY PRIOR TO ROUGH-IN. CONTRACTOR SHALL FIELD VERIFY SIGN CIRCUIT COMPLIES WITH ALL LOCAL AND NATIONAL CODES AND IS PROVIDED WITH ALL REQUIRED DISCONNECTING MEANS PER N.E.C. PROVIDE INTERIOR ACCESS PANELS FOR SIGN CIRCUIT AS NECESSARY. .
6. DATA WIRING BY OWNER. ELECTRICAL CONTRACTOR TO PROVIDE SINGLE GANG JUNCTION BOX W/ PULL STRING AT EACH DATA LOCATION WITH 3/4" CONDUIT CONCEALED IN WALL TO ABOVE ACCESSIBLE CEILING..
7. ELECTRICAL CONTRACTOR SHALL COORDINATE WITH OWNER'S REP TO VERIFY LOCATION OF TELEPHONE CONNECTION POINT AND RUN CONDUIT AND PHONE/DATA LINES FROM TENANT SPACE TO BASE BUILDING CONNECTION POINT. VERIFY LOCATION IN FIELD.
8. PROVIDE AND INSTALL NEW 60A/2P DISCONNECT FOR TANK WATER HEATER.
9. PANEL "A" SHALL BE RECESSED-MOUNT, AND FACE OPEN INTO ROOM FURROUT WALLS AS NECESSARY.
10. CIRCUIT EXHAUST FAN TO LOCAL LIGHTING CIRCUIT. PROVIDE ALL NECESSARY RELAYS, CONTACTORS, ETC.., TO CONNECT ROOM'S OCCUPANCY SENSOR.
11. PLACE RECIRCULATION PUMP OUTLET/J-BOX ABOVE WATER HEATER IN UTILITY ROOM WHERE SPACE ALLOWS.
12. PROVIDE AND INSTALL (1) EMPTY JUNCTION BOX FOR SECURITY PANEL +48 A.F.F.
13. PROVIDE AND INSTALL NEW TIMECLOCK.
14. PROVIDE (2) EMPTY JUNCTION BOXES FOR VOLUME CONTROL W/ CONDUIT ABOVE CEILING. COORDINATE EXACT LOCATION PRIOR TO INSTALLATION.
15. PROVIDE AND INSTALL NEW 100A/3P NEMA 3R DISCONNECT FOR ROOFTOP UNIT.

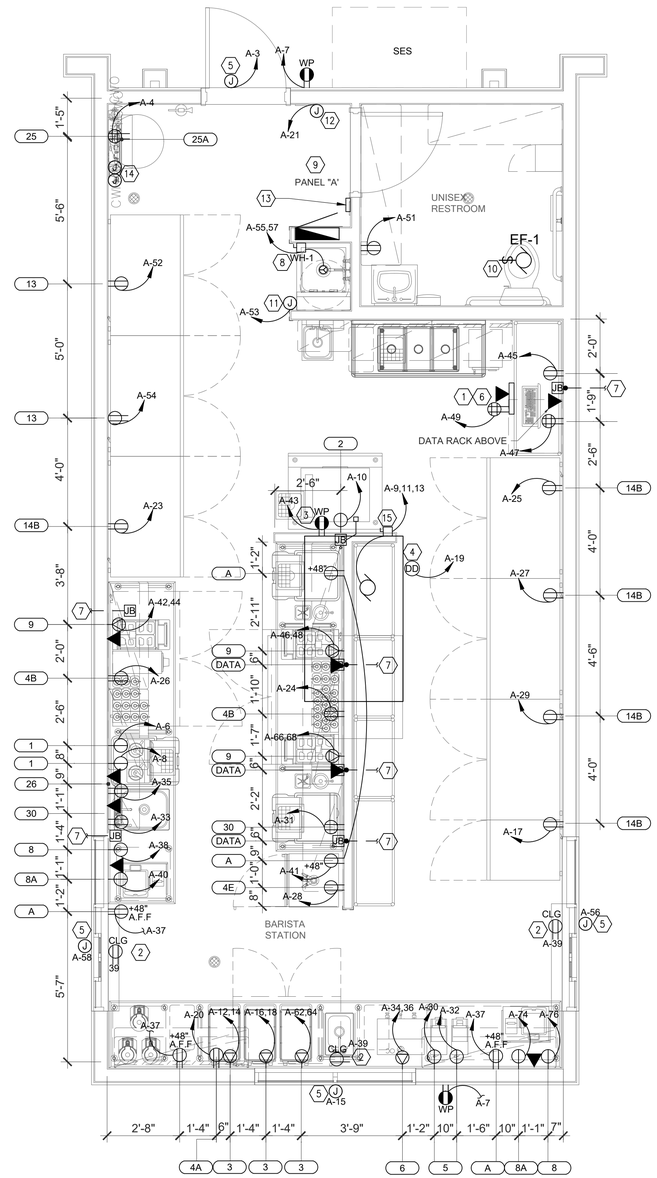

1 POWER FLOOR PLAN

SCALE: 3/8" = 1'-0"

NORTH

GENERAL NOTES

1. REFER TO MECHANICAL AND PLUMBING PLANS FOR EXACT SIZE, LOCATION, AND ELECTRICAL REQUIREMENTS FOR ALL MECHANICAL AND PLUMBING EQUIPMENT.
2. ALL EXTERIOR DISCONNECTS SHALL BE W.P. TYPE.
3. ELECTRICAL CONTRACTOR SHALL FIELD VERIFY ALL CONNECTION REQUIREMENTS (HP, AMPS, VOLTAGE, PHASE, MOUNTING HEIGHT, AND DISCONNECTING MEANS) FOR ALL EQUIPMENT SUPPLIED BY OTHERS BEFORE ROUGH-IN. DISCONNECT SWITCHES SHALL BE LOCATED WITH N.E.C. CODE CLEARANCE OR PROVIDE LOCKOUT TYPE C/B.
4. ALL EQUIPMENT SHALL BE LISTED BY A NATIONALLY RECOGNIZED TESTING LABORATORY.
5. ALL EXTERIOR RECEPTACLE SHALL BE W.P/ GFCI. TYPE.

A. ALL ELECTRICAL PANEL BOARDS SHALL MAINTAIN 3'-0" IN FRONT WORKING CLEARANCE REFER TO ONE-LINE DIAGRAM FOR DETAIL.

B. WHEN REQUIRED, IT IS THE OWNER'S RESPONSIBILITY TO CONTRACT WITH A COMMISSIONING AUTHORITY TO COMPLY WITH LOCAL CODES.

C. VERIFY GFI REQUIREMENTS PRIOR TO BID. ALL RECEPTACLES WITHIN 6'-0" OF A SINK OR WASH BASIN SHALL BE GFI RATED.

D. ELECTRICAL CONTRACTOR RESPONSIBLE FOR COORDINATING EXACT LOCATION, QUANTITIES AND INSTALLATION REQUIREMENTS OF ELECTRICAL EQUIPMENT IN MILL WORK.

E. CONDUITS & WIRING SHOWN FOR REFERENCE ONLY. IT IS THE RESPONSIBILITY OF THE ELECTRICAL CONTRACTOR TO PROVIDE THE NUMBER OF CONDUCTORS REQUIRED FOR HOT-LEGS, NEUTRAL, AND GROUNDING AT EACH DEVICE FOR PROPER BRANCH CIRCUITING SHOWN FOR EACH AREA OR ROOM.

F. THIS DRAWING IS TO BE READ IN CONJUNCTION WITH ALL OTHER DISCIPLINES DRAWINGS. ANY DISCREPANCIES ARE TO BE BROUGHT TO THE ATTENTION OF THE ARCHITECTS AND ENGINEERS PRIOR TO FINAL BID CLOSING.

G. ALL RECEPTACLES INSTALLED AT 16" ABOVE FINISH FLOOR UNLESS OTHERWISE NOTED.

H. GENERAL CONTRACTOR TO VERIFY WITH COUNTER FAB VENDER PRIOR TO OUTLET LOCATION.

I. PROVIDE GFCI PROTECTION FOR ALL BACK OF HOUSE/ DRIVE THRU WINDOW AREA RECEPTACLES PER NEC 210.8 (B)(2). MUST BE READILY ACCESSIBLE OR USE GFI BREAKER.

KITCHEN EQUIPMENT NOTES

A. FINAL CONNECTION TO ALL HARD-WIRED EQUIPMENT SHALL BE MADE WITH "SEAL-TITE" FLEXIBLE CONDUIT.

B. THE ELECTRICAL CONTRACTOR SHALL MAKE FINAL ELECTRICAL CONNECTIONS TO ALL RELATED EQUIPMENT.

C. "CALL OUT" - INDICATES EQUIPMENT IDENTIFICATION NUMBER, REFER TO EQUIPMENT SCHEDULE. COORDINATE WITH EQUIPMENT SCHEDULE FOR ADDITIONAL INFORMATION.

D. THE ELECTRICAL CONTRACTOR SHALL VERIFY ROUGH-IN REQUIREMENTS, LOCATIONS, MOUNTING HEIGHTS, VOLTAGE, PHASE, AMPS, HP, KW, ETC. FOR ALL EQUIPMENT PRIOR TO ROUGH-IN.

E. PROVIDE SEAL-OFF'S FOR ALL CONDUITS ENTERING OR LEAVING WALK-IN BOXES.

F. ALL CIRCUITS SHALL HAVE AN INSULATED GROUND WIRE (BOND) SIZED PER N.E.C. #250.122, #12 MINIMUM GROUND, WIRE NOT SHOWN ON DRAWINGS.

G. THE ELECTRICAL CONTRACTOR SHALL FURNISH AND INSTALL DISCONNECT SWITCHES, CONDUIT, WIRE AND INSTALL UNDER SUPERVISION OF THE EQUIPMENT SUPPLIER.

H. THE ELECTRICAL CONTRACTOR SHALL VERIFY PLUG CONFIGURATIONS FOR APPLIVABLE EQUIPMENT WITH SUPPLIER PRIOR TO ROUGH-IN.

I. PROVIDE GFCI PROTECTION FOR ALL EQUIPMENT/ KITCHEN RECEPTACLES PER N.E.C. 210.8 (B)(2).

MECHANICAL GENERAL NOTES

A. VERIFY ALL MECHANICAL UNIT LOCATIONS WITH MECHANICAL PLANS.

B. THE ELECTRICAL CONTRACTOR SHALL NOT MOUNT DISCONNECT EQUIPMENT DIRECTLY TO MECHANICAL UNITS FOR DISCONNECT 200A AND LARGER. THE ELECTRICAL CONTRACTOR SHALL PROVIDE A SELF-SUPPORTING SYSTEM FOR DISCONNECT EQUIPMENT.

C. PROVIDE WEATHERPROOF, HEAVY DUTY, NEMA 3R FUSIBLE DISCONNECT SWITCHES FOR ALL MECHANICAL UNITS LOCATED OUTSIDE.

D. ALL EXTERIOR RECEPTACLES SHALL BE WEATHER RESISTANT GFCI (PASS & SEYMOUR 2095DSWRBK OR EQUAL). INSTALLED IN A WEATHERPROOF ENCLOSURE WITH A WHILE IN USE COVERPLATE (PASS & SEYMOUR #WIUC10DCL OR EQUAL).

E. EXHAUST FANS MOUNTED OUTSIDE SHALL HAVE A WEATHERPROOF DISCONNECT MOUNTED EXTERIOR TO THE UNIT. INTERNAL DISCONNECT SWITCHES SHALL NOT BE ALLOWED.

GHA
Architecture / Development
14901 Quorum Drive
Suite 300
Dallas Texas 75254
Ph: (972) 239-8884
Fax: (972) 239-5054

STATE OF MICHIGAN
GRANT REID CLAUSSEN
License No. 6201309882
LICENSED PROFESSIONAL ENGINEER

12-17-2021

Engineering Firm : F-21834
GHC Engineers, LLC
14901 Quorum Dr, Ste 300
Dallas, Texas 75254
Office: 972-239-8884
gclaussen@ghcengineers.com
Project # G21-0959.001

EST. 1998 SCOOTER'S COFFEE

PROJECT ADDRESS:
1490 WEST ANN ARBOR ROAD
PLYMOUTH, MI 48170

REVISIONS:

TITLE:

POWER FLOOR PLAN

DATE:
09/16/2021

PROJECT NO.
210536

- [ ] DESIGN DEVELOPMENT
- [x] PERMIT SUBMITTAL
- [ ] BID PACKAGE
- [ ] CONSTRUCTION ISSUE

SHEET NO.

E2.02