ELECTRICAL PANEL SCHEDULE

PANEL: A **SERVICE:** 120/208V, 3P, 4W + GND **FEEDERS:** SEE ONE LINE DIAGRAM
PANEL TYPE: SQ-D "NQOD" OR EQUAL **BUS RATING:** 200 A M.L.O. **MOUNTING:** NEMA-1 RECESSED

LOAD DESCRIPTION	NOTE	LOAD VOLT-AMP	WIRE	CB/P		A B C		CB/P	WIRE	LOAD VOLT-AMP	NOTE	LOAD DESCRIPTION
AREA LIGHTS	**	1080	10	20/2	1		2	20/1	12	750		DINING RM. LIGHTS
		1080	10		3		4	20/1	12	810		DINING RM. LIGHTS
AREA LIGHTS	**	1080	10	20/2	5		6	20/1	12	1500		KITCHEN AREA LIGHTS
		1080	10		7		8	20/1	12	720		OCU / CREDIT CARD SWIPE
PYLON SIGNS *	**	1200	12	20/1	9		10	20/1	12	900		DIGITAL MENU BOARD #94A
SECONDARY PYLON SIGN *	**	1200	12	20/1	11		12	20/1	12	400		RESTROOM LIGHTS/EF-2
DRIVE-THRU MENU SIGNS		720	12	20/1	13		14	20/1	12	720		DIRECTIONAL SIGNS
RESTROOM DUCT HEATER	***	1500	12	20/2	15		16	20/1	12	1320		KITCHEN/SERVICE/OFFICE LIGHTS
		1500	12		17		18	20/1	12	360		SMOKE DETECTOR ALARM PANEL
CHANNEL LETTERS / LOGO	**	1200	12	20/1	19		20	20/1	12	130		ICE MACHINE 1425LB
PARAPET LIGHT BAND	**	240	10	20/1	21		22	20/1	12	720		RELAY PANEL
CHANNEL LETTERS / LOGO	**	1200	12	20/1	23		24	20/1	12	1550		EXTERIOR BUILDING LIGHTS **
		690	12	20/1	25		26	20/1	12	180		TELEPHONE REC.
EXTERIOR BUILDING LIGHTS	**	1475	12	20/1	27		28	20/1	12	660		DINING RECEPTACLE
COOL/FRZR LIGHTS/DOOR HTR/HE.		400	12	20/1	29		30	20/1	12	360		KITCHEN RECEPTACLES
ROOF/EXTERIOR RECEPTACLES		720	12	20/1	31		32	20/2		1080		AREA LIGHTS **
SERVICE COUNTER/CORRIDOR		360	12	20/1	33		34			1080		
D/T SPEED/SERVICE #90C CAMERA		540	12	20/1	35		36	20/1	12	720		OFFICE RECEPTACLES
KITCHEN AREA LIGHTS		1200	12	20/1	37		38	20/2	12	1500		VESTIBULE DUCT HEATER ***
CREW/STORAGE RECEPTACLES		540	12	20/1	39		40		12	1500		
CHANNEL LETTERS / LOGO	**	1200	12	20/1	41		42	20/1	12	300		SAFE #70

TOTAL CONNECTED LOAD: 37,915 VA **PHASE 'A':** 11770 VA
TOTAL CONNECTED AMPS: 105 AMP **PHASE 'B':** 13835 VA
PHASE 'C': 12310 VA

NOTES :
(TC) = WIRE THROUGH CONTACTOR.
(HACR) = HACR TYPE BREAKER.
(LO) = LOCKED BREAKER
(GFCI) = GROUND FAULT CIRCUIT INTERRUPTER
(IG) = WIRE SEPARATE TO ISOLATED GROUND BUS.

PANEL 'A' NOTES:
1. ** ELECTRICAL CONTRACTOR TO WIRE THESE CIRCUITS THRU MASTER CONTACTOR PANEL. REFERENCE WIRING DIAGRAMS SHEET E-5.
2. ALL BREAKERS SHALL BE RATED FOR SWITCHING DUTY.
3. * VERIFY CIRCUIT REQUIREMENTS FOR PYLON SIGN.
4. *** ZONES A & B ONLY. COORDINATE WITH HVAC.

ELECTRICAL PANEL SCHEDULE

PANEL: M **A.I.C. RATING:** 42,000 **SERVICE:** 120/208V, 3P, 4W + GND **FEEDERS:** SEE ONE LINE DIAGRAM
PANEL TYPE: SQ-D "I-LINE" OR EQUAL **SIZE:** 600 AMP MCB **MOUNTING:** NEMA-1 RECESSED

LOAD DESCRIPTION	NOTE	LOAD VOLT-AMP	WIRE	CB/P		A B C		CB/P	WIRE	LOAD VOLT-AMP	NOTE	LOAD DESCRIPTION
		11770	3/0	200/3	1		2	200/3	3/0	12850		
PANEL A		13835								12994		PANEL B
		12310								14344		
	HACR	3140	#8	60/3	3		4	150/3	1/0	14440		
RTU-1		3140								16320		PANEL D
		3140								10800		
	HACR	3140	#8	50/3	5		6	50/3	#8	3140	HACR	
RTU-3		3140								3140		RTU-2
		3140								3140		
EF-1 #23A		350	#12	20/2	7		8	20/3	#12	700		
		350								700		STEAMER OVEN #36
										700		
EF-2 #33A		350	#12	20/2	9		10					SPACE
		350										
WALK-IN BOX COOLER		465	#12	20/2	11		12	30/2	#10	1700		FROZEN COKE
CONDENSER #40		465								1700		MACHINE #14
WALK-IN BOX FREEZER		3024	#10	30/3	13		14	50/3	#8	3140		
CONDENSER #40		3024								3140		RTU-4
		3024								3140		

TOTAL CONNECTED LOAD: 173,895 VA **PHASE 'A':** 58209 VA
TOTAL CONNECTED AMPS: 484 AMPS **PHASE 'B':** 61948 VA
PHASE 'C': 53738 VA

NOTES:
(TC) = WIRE THROUGH CONTACTOR.
(HACR) = HACR TYPE BREAKER.
(LO) = LOCKED BREAKER
(GFCI) = GROUND FAULT CIRCUIT INTERRUPTOR
(IG) = WIRE SEPARATE TO ISOLATED GROUND BUS.

LOAD SUMMARY

KITCHEN LOADS
A 1220
B 31424
D 55920
M 17602
TOTAL 106166 X 65% = 69008

LIGHTING LOADS
A 14405
B 0
D 0
M 0
TOTAL 14405 X 125% = 18006

REMAINING LOADS
A 22690
B 20408
D 0
M 39077
TOTAL 46328 X 100% = 46328

RECEPTACLES
A 3180
B 3816
D 0
M 0
TOTAL 6996 X 100% = 6996

TOTAL ADJUSTED LOAD = 148718 (413A)

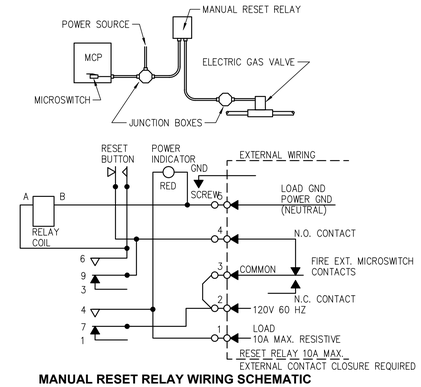

MANUAL RESET RELAY WIRING SCHEMATIC
AMEREX AUTOMATIC FIRE CONTROL SYSTEM
SCALE: NONE

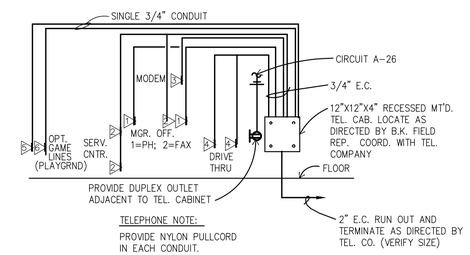

TELEPHONE RISER DIAGRAM
SCALE: NONE

ELECTRICAL PANEL SCHEDULE

PANEL: B **SERVICE:** 120/208V, 3P, 4W + GND **FEEDERS:** SEE ONE LINE DIAGRAM
PANEL TYPE: SQ-D "NQOD" OR EQUAL **SIZE:** 200 AMP MLO **MOUNTING:** NEMA-1 RECESSED

LOAD DESCRIPTION	NOTE	LOAD VOLT-AMP	WIRE	CB/P		A B C		CB/P	WIRE	LOAD VOLT-AMP	NOTE	LOAD DESCRIPTION
SELF-SERVE DRINK DISPENSER #10		600	12	20/1	1		2					SPARE
P.O.S. RECEPTACLES	⊠ IG/LO	1320	12	20/1	3		4	20/1	12	360		PRODUCT HOLDING FREEZER #32
P.O.S. RECEPTACLES	⊠ IG/LO	1320	12	20/1	5		6	20/1	12	400		BROILER
DRIVE-THRU DRINK DISPENSER #11		600	12	20/1	7		8	20/1	12	1200		MEAT FREEZER #25
REAR DOOR BUZZER		720	12	20/1	9		10	20/1	12	1200		U/C REFRIGERATOR #53
DOOR ALARM		720	12	20/1	11		12	30/1	12	2400		FRY HOLD STATION #30
WATER HEATER		180	12	20/1	13		14	20/1	12	960		REACH-IN FREEZER #40A
SERVICE CTR/D.T. RECEPT.		576	12	20/1	15		16	20/1	12	180		WATER HEATER
SPARE				20/1	17		18	20/1	12	180		WATER HEATER
SMOOTHIE BLENDER		990	12	20/1	19		20	20/2	12	1300	HACR	ICE MACHINE
COFFEE/TEA BREWER #17		1820	12	20/2	21		22		12	1300		
		1820	12		23		24	20/1	12	1344		FRYER CONTROLS #31 **
SHORTENING STORAGE UNIT #31B		500	12	20/1	25		26					SPARE
WATER BOOSTER #10A		1428	12	20/1	27		28	20/1				SPARE
SHAKE/SOFTSERVE #15 (LEFT)		1620			29		30	20/2	12	1650		PRODUCT HOLDING UNIT #51
		1620	12	15/3	31		32		12	1650		
		1620			33		34	20/1				SPARE
SHAKE/SOFTSERVE #15 (RIGHT)		1750			35		36	20/1				SPARE
		1750	12	20/3	37		38					SPARE
		1750			39		40					SPARE
SPARE				20/2	41		42					SPARE

TOTAL CONNECTED LOAD: 40,188 VA **PHASE 'A':** 12850 VA
TOTAL CONNECTED AMPS: 111 AMP **PHASE 'B':** 12994 VA
PHASE 'C': 14344 VA

NOTES :
(TC) = WIRE THROUGH CONTACTOR.
(HACR) = HACR TYPE BREAKER.
(LO) = LOCKED BREAKER
(GFCI) = GROUND FAULT CIRCUIT INTERRUPTER
(IG) = WIRE SEPARATE TO ISOLATED GROUND BUS.

PANEL 'B' NOTES:
1. * PROVIDE ISOLATED GROUND BUS.
2. ** CONTRACTOR SHALL WIRE THESE CIRCUITS THRU MASTER CONTACTOR PANEL. REFERENCE WIRING DIAGRAM SHEET E-5.
3. ⊠ PROVIDE HLO-1 HANDLE LOCK-OFF.

ELECTRICAL PANEL SCHEDULE

PANEL: D **SERVICE:** 120/208/240V, 3P, 4W + GND **FEEDERS:** SEE ONE LINE DIAGRAM
BUS RATING: 150A M.L.O. **MOUNTING:** FURNISHED BY EQUIPMENT SUPPLIER

LOAD DESCRIPTION	NOTE	LOAD VOLT-AMP	WIRE	CB/P		A B C		CB/P	WIRE	LOAD VOLT-AMP	NOTE	LOAD DESCRIPTION
PHU/MICROWAVE		1920	12	20/2	1		2	20/2	12	1920		PHU/MICROWAVE
		1920	12		3		4		12	1920		
PHU/MICROWAVE		1920	12	20/2	5		6	20/2	12	1920		PHU/MICROWAVE
		1920	12		7		8		12	1920		
CONVEYOR TOASTER		1920	12	20/2	9		10	20/2	12	1920		EGG COOKER
		1920	12		11		12		12	1920		
VERTICAL TOASTER		2880	10	30/2	13		14	20/1	12	1920		SPARE
		2880	10		15		16	20/1	12	1920		SANDWICH STATION
HEATED SURFACES		240	12	20/1	17		18	30/2	10	2880		VERTICAL TOASTER
SPACE					19		20			2880		
UTILITY		1920	12	20/1	21		22	20/1	12	1920		UTILITY
SPACE					23		24					SPACE

TOTAL CONNECTED LOAD: 55920 VA **PHASE 'A':** 14400 VA
TOTAL CONNECTED AMPS: 156 AMP **PHASE 'B':** 16320 VA
PHASE 'C': 10800 VA

NOTES :
(TC) = WIRE THROUGH CONTACTOR.
(HACR) = HACR TYPE BREAKER.
(LO) = LOCKED BREAKER
(GFCI) = GROUND FAULT CIRCUIT INTERRUPTOR
(IG) = WIRE SEPARATE TO ISOLATED GROUND BUS.

RISER NOTES:
1. ALL FUSED DISCONNECT SWITCHES TO BE PROVIDED BY CONTRACTOR.
2. REFER TO PANEL NOTES.
3. REFER TO GENERAL NOTES, SHEET E-2
4. "T.C." INDICATES TIME CLOCK (OR TIME SWITCH)
5. SEE MASTER CONTACTOR PANEL WIRING DIAGRAM FOR ADDITIONAL CIRCUITS FROM PANELS THAT ARE CONTROLLED THROUGH THE MASTER CONTACTOR PANEL
6. PROVIDE AN ISOLATED GROUND BUS IN PANEL & RUN CIRCUIT GROUND WIRE TO THIS BUS. RUN A #6 GREEN GROUND FROM THIS BUS TO MAIN SERVICE GROUND POINT.
7. MASTER CONTACTOR PANEL AND MANUAL ON-OF PANEL TO BE INCLUDED IN ELECTRICAL CONTRACTORS SCOPE OF WORK.

ELECTRICAL DISTRIBUTION PANELS, MASTER CONTACTOR PANEL AND MANUAL ON/OFF PANEL MAY BE PURCHASED AS A LOOSE GEAR PACKAGE THROUGH:
SUNCOAST ENVIRONMENTAL CONTROLS, INC.
8566 115TH AVENUE NORTH
LARGO, FLORIDA 34643
PHONE (877) 544-6679

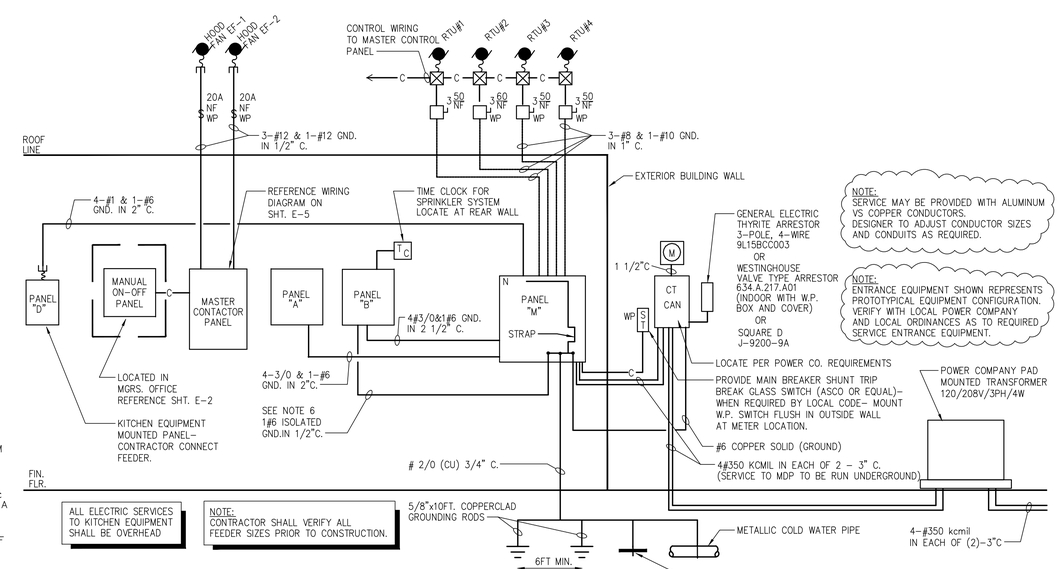

ELECTRICAL RISER DIAGRAM
SCALE: NONE

No.	Date	By	Notes
3	5.26.21	DB	PLANNING SUBMITTAL
4	7.07.21	DB	BUILDING SUBMITTAL
5	8.27.21	AS	BUILDING REVISIONS
6	10.29.21	AS	ENGINEERING REVISIONS
7	12.10.21	AS	BUILDING REVISIONS 2

Drawn By: CP
Checked: SB
Scale: AS NOTED
Date: 03.24.21

ALL RIGHTS RESERVED. NO PART OF THESE DRAWINGS OR SPECIFICATIONS MAY BE REPRODUCED OR USED IN ANY FORM OR MANNER WITHOUT THE PRIOR WRITTEN PERMISSION OF THE PROJECT FOR WHICH THE HAVE BEEN PREPARED, WITHOUT PRIOR WRITTEN AUTHORIZATION FROM THE ARCHITECT.

BURGER KING CORPORATION

TECHNICAL GROUP, Inc.
37716 HILLS TECH DRIVE
FARMINGTON HILLS, MI 48331
T:(248) 626-3000 F:(248) 626-7004

PROJECT
BURGER KING #29300
2731 LONDON GROVE PORT RD.
GROVE CITY, OH 43123

SHEET TITLE
ELECTRICAL PANELS AND RISERS

DO NOT SCALE THIS PRINT. USE FIGURED DIMENSIONS ONLY.

JOB # TG-21657

SHEET E-3