SHEET INDEX

A0.00	COVER
A0.01	LIFE SAFETY
A1.01	ARCHITECTURAL SITE PLAN
A2.00	DEMO FLOOR PLAN
A2.01	FLOOR PLAN
A2.02	FURNITURE PLAN LAYOUT
A2.03	EXISTING ROOF PLAN
A2.04	ROOF PLAN
A2.05	KITCHEN EQUIPMENT PLAN
A2.06	BAR ROUGH-IN PLAN
A2.07	KITCHEN ROUGH-IN PLAN
A3.01	DOOR AND WINDOW AND DETAILS
A3.02	FINISH SCHEDULE
A3.03	FLOOR FINISH PLAN
A4.00	EXISTING EXTERIOR ELEVATIONS
A4.01	EXISTING EXTERIOR ELEVATIONS
A4.02	EXTERIOR ELEVATIONS
A4.03	EXTERIOR ELEVATIONS
A5.01	RESPONSIBILITY MATRIX
A6.01	RESTROOM PLAN & DETAILS
A6.02	INTERIOR ELEVATIONS
A6.03	INTERIOR ELEVATIONS
A7.01	REFLECTED CEILING PLAN
A8.01	STANDARD MOUNTING HTS AND MISC DETAILS
A9.01	BAR SECTIONS & DETAILS
A9.02	BAR SECTIONS & DETAILS
A9.03	BAR TRELLIS PLAN
A9.04	BAR TRELLIS DETAILS
A9.05	FINISH DETAILS
A9.06	TOWER SECTION & DETAILS

STRUCTURAL

SG-01	GENERAL NOTES
SG-02	SPECIAL INSPECTIONS & TESTING
SG-03	SPECIFICATIONS
SP-01	FOUNDATION PLAN
SP-02	ROOF FRAMING PLAN
S5-01	SECTIONS

ELECTRICAL

E1.0	FLOOR PLAN - LIGHTING
E2.0	FLOOR PLAN - POWER
E2.1	ROOF PLAN - ELECTRICAL
E3.0	ELECTRICAL SCHEDULES AND DETAILS
E3.1	ELECTRICAL SCHEDULES AND DETAILS
E3.2	ELECTRICAL SCHEDULES AND DETAILS

FIRE PROTECTION

FP1.0	FLOOR PLAN - FIRE PROTECTION

MECHANICAL

M1.0	FLOOR PLAN - HVAC
M2.0	ROOF PLAN - MECHANICAL
M3.0	MECHANICAL SCHEDULES AND DETAILS
M3.1	MECHANICAL SCHEDULES AND DETAILS
M4.0	CAPTIVEAIRE SCHEDULES AND DETAILS
M4.1	CAPTIVEAIRE SCHEDULES AND DETAILS
M4.2	CAPTIVEAIRE SCHEDULES AND DETAILS
M4.3	CAPTIVEAIRE SCHEDULES AND DETAILS
M4.4	CAPTIVEAIRE SCHEDULES AND DETAILS
M4.5	CAPTIVEAIRE SCHEDULES AND DETAILS

DEMOLITION

MEP1.0	FLOOR PLAN - DEMOLITION
MEP1.1	ROOF PLAN - DEMOLITION

PLUMBING

P1.0	PLUMBING SANITARY PLAN
P1.1	PLUMBING WATER & GAS PLAN
P2.0	ENLARGED PLAN - SANITARY PLAN
P2.1	ENLARGED PLAN - WATER AND GAS PLAN
P3.0	PLUMBING SCHEDULES AND DETAILS
P3.1	PLUMBING SCHEDULES AND DETAILS
P3.2	PLUMBING SCHEDULES AND DETAILS

SMOKEY BONES

LOCATED AT:
45001 SCHOENHERR RD
UTICA, MI 48315

SYMBOL LEGEND

- 0.0 / A0.0 — SECTION DETAIL/ SHEET
- 101 — DOOR NUMBER, SEE SCHEDULE
- EL. 000.0' A.F.F. — FINISH ELEVATION
- 00 — INTERIOR ELEVATION/ LOCATION
- ROOM NAME 100 — ROOM NAME/ ROOM NUMBER
- A — WINDOW NUMBER, SEE SCHEDULE
- NEW DOOR SEE DOOR SCHEDULE
- 0.0 / A0.0 — BUILDING SECTION MARKER
- 0.0 / A0.0 — WALL SECTION MARKER
- 0.00 — SECTION DETAIL MARK
- 0.0 / A0.0 — ENLARGED REFERENCE

LOCATOR MAP

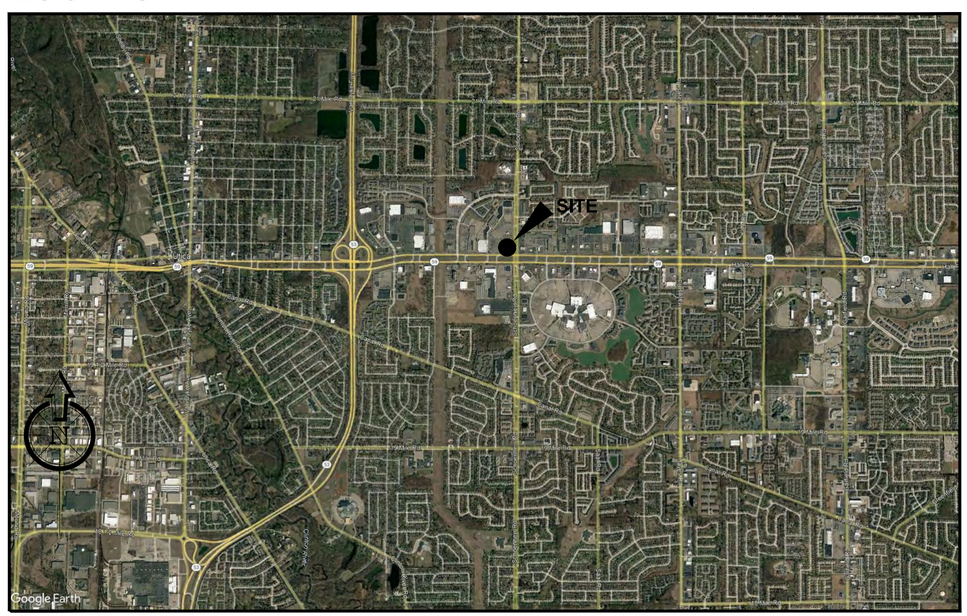

PROFESSIONAL OF RECORD:

ARCHITECT

NAME: JEFF SPIKES
LICENSE NO.: 1301069572
PHONE NO.: 318-828-1637

JEFF SPIKES ARCHITECT
417 LAKE STREET
SHREVEPORT, LOUISIANA 71101

CONTRACTOR NOTES

A. IT IS THE CONTRACTOR'S RESPONSIBILITY TO REVIEW ALL DRAWINGS AND SPECIFICATIONS , INCLUDING BUT NOT LIMITED TO ARCHITECTURAL, CIVIL, STRUCTURAL, MECHANICAL, PLUMBING, AND ELECTRICAL PRIOR TO SUBMITTING A BID. REPORT ANY DISCREPANCIES TO ARCHITECT OR ENGINEER PRIOR TO BID.

B. BIDDERS ARE TO VISIT THE SITE AND FAMILIARIZE THEMSELVES WITH EXISTING CONDITIONS AND SATISFY THEMSELVES AS TO THE NATURE AND SCOPE OF THE WORK. THE SUBMISSION OF A BID WILL BE EVIDENCE THAT SUCH AN EXAMINATION HAS BEEN MADE. LATER CLAIMS FOR LABOR, EQUIPMENT, OR MATERIALS REQUIRED, OR FOR ANY DIFFICULTIES ENCOUNTERED WHICH COULD HAVE BEEN FORESEEN HAD AN EXAMINATION BEEN MADE, WILL NOT BE ALLOWED.

C. IT IS THE RESPONSIBILITY OF THE CONTRACTOR TO NOTIFY THE ARCHITECT, AND OWNER OF ANY DISCREPANCIES ENCOUNTERED ON THE PLANS OR IN EXISTING SITE CONDITIONS PRIOR TO SUBMISSION OF BID.

D. CONTRACTOR, DURING PRE-BID SITE VISIT, SHALL TAKE NOTICE OF ANY VISUALLY APPARENT CODE VIOLATIONS AND ALLOW IN HIS/HER BID FOR CORRECTING SUCH VIOLATIONS.

E. CONTRACTORS ARE CAUTIONED TO COORDINATE ITEMS IN THEIR SCOPE OF WORK WITH OTHER TRADES.

F. ALL CONSTRUCTION TO COMPLY WITH LOCAL AND STATE CODES AND STANDARDS

G. CONTRACTOR TO PROVIDE LOW LEVEL EXIT SIGNAGE WITH BRAILLE AT ALL REQUIRED EXITS.

H. CONTRACTOR IS VERIFY EXISTING BACKFLOW PREVENTER IS PRESENT AND WORKING PROVIDE NEW OR REPAIR AS NEEDED

I. THESE NOTES APPLY TO ALL SHEETS.

CODE INFORMATION:

CODES UTILIZED

FIRE/ LIFE SAFETY CODE:	INTERNATIONAL FIRE CODE, 2015 ED
ACCESSIBILITY CODE:	2009 ANSI A117.1
BUILDING CODE:	MI BUILDING CODE, 2015 ED
PLUMBING CODE:	MI PLUMBING CODE, 2015 ED
FUEL GAS CODE:	INTERNATIONAL FUEL GAS CODE, 2015 ED
MECHANICAL CODE:	MI MECHANICAL CODE, 2015 ED
ELECTRICAL CODE:	NEC ELECTRICAL CODE, 2014 ED

iA ARCHITECTURE

SMOKEY BONES
UTICA, MI

STATE OF MICHIGAN
JEFF SPIKES
NUMBER 1301069572
ARCHITECT

JEFF SPIKES, ARCHITECT
LICENSE NO. 1301069572

COPYRIGHT
THESE DOCUMENTS ARE PROTECTED BY UNITED STATES COPYRIGHT LAW. THEY HAVE BEEN PREPARED SPECIFICALLY FOR THE PROJECT IDENTIFIED AND ARE NOT SUITABLE FOR USE ON ANY OTHER PROJECT OR AT ANY OTHER LOCATION WITHOUT THE EXPRESS WRITTEN APPROVAL AND PARTICIPATION OF IARCHITECTURE. REPRODUCTION OF THESE DOCUMENTS MUST BE AUTHORIZED BY THE ARCHITECT. ALL RIGHTS ARE RESERVED TO IARCHITECTURE.

COVER

REVISIONS	
NO.	DATE
1	1.27.2022

PROJECT NO: IA 2119

SHEET A0.00

DATE 11/12/21

SCOPE OF WORK:

RESTAURANT CONVERSION (EXISTING TGI FRIDAY'S TO SMOKEY BONES)

CODES ENFORCED:

CODES UTILIZED

FIRE/ LIFE SAFETY CODE:	INTERNATIONAL FIRE CODE, 2015 ED
ACCESSIBILITY CODE:	2009 ANSI A117.1
BUILDING CODE:	MI BUILDING CODE, 2015 ED
PLUMBING CODE:	MI PLUMBING CODE, 2015 ED
FUEL GAS CODE:	INTERNATIONAL FUEL GAS CODE, 2015 ED
MECHANICAL CODE:	MI MECHANICAL CODE, 2015 ED
ELECTRICAL CODE:	NEC ELECTRICAL CODE, 2014 ED

CODE INFORMATION:

OCCUPANCY TYPE: SMOKEY BONES BBQ RESTAURANT

BUILDING CONSTRUCTION TYPE:

1. OCCUPANCY CLASSIFICATION (304)

   GROUP A - 2 ASSEMBLY (RESTAURANT)

2. CONSTRUCTION TYPE (608)

   TYPE VI - UNPROTECTED, SPRINKLERED (EXISTING)

3. AREA ALLOWANCES (TABLE 500)

OCCUPANCY	MAX. HEIGHT	MAX. STORIES	ALLOW. AREA	ACTUAL AREA
A-2	40'-0" (PER CODE) 25'-0" (PER DEVELOPER)	1	15,000 SF	6,866 SF

TOTAL OCCUPANT LOAD:

FLOOR	OCCUPANCY	AREA	MIN. OCC. LOAD	OCCUPANTS
1	DINING ROOM	3,185 NET SF	TOTAL SEATS	--
1	BUSINESS	1,938 SF	100/PERSON	20
1	WAITING	155 SF	5/PERSON	31
1	WAITING (BAR)	93 SF	5/PERSON	19
				262

BUILDING USE:	RESTAURANT
TRAVEL DISTANCE REQUIRED:	250' MAX.
COMMON PATH REQUIRED:	20' (50 OR MORE OCCUPANTS) / 75' (LESS THAN 50 OCCUPANTS) MAX
DEAD END CORRIDOR:	20' MAX

LEGEND

FIRE ALARM

FIRE ALARM PROVIDED PER THE 2014 INDIANA FIRE PREVENTION CODE

MAIN DINING SEATING & TABLE SCHEDULE		
SEATING TYPE:	TABLES	SEATS
ONE'S	21	**21**
TWO'S	8	**16**
THREE'S	0	**0**
FOUR'S	17	**68**
FIVE'S	0	**0**
SIX'S	15	**90**
EIGHT'S	0	**0**
TOTALS:	**61**	**195**
SEATING RATIO:		**3.2**
5% ACCESSIBLE SEATING: (4 ADA Seats Req. for 51-60 Seats)		**9.8**
ACCESSIBLE SEATING: (REQUIRED TO ROUND UP)		10

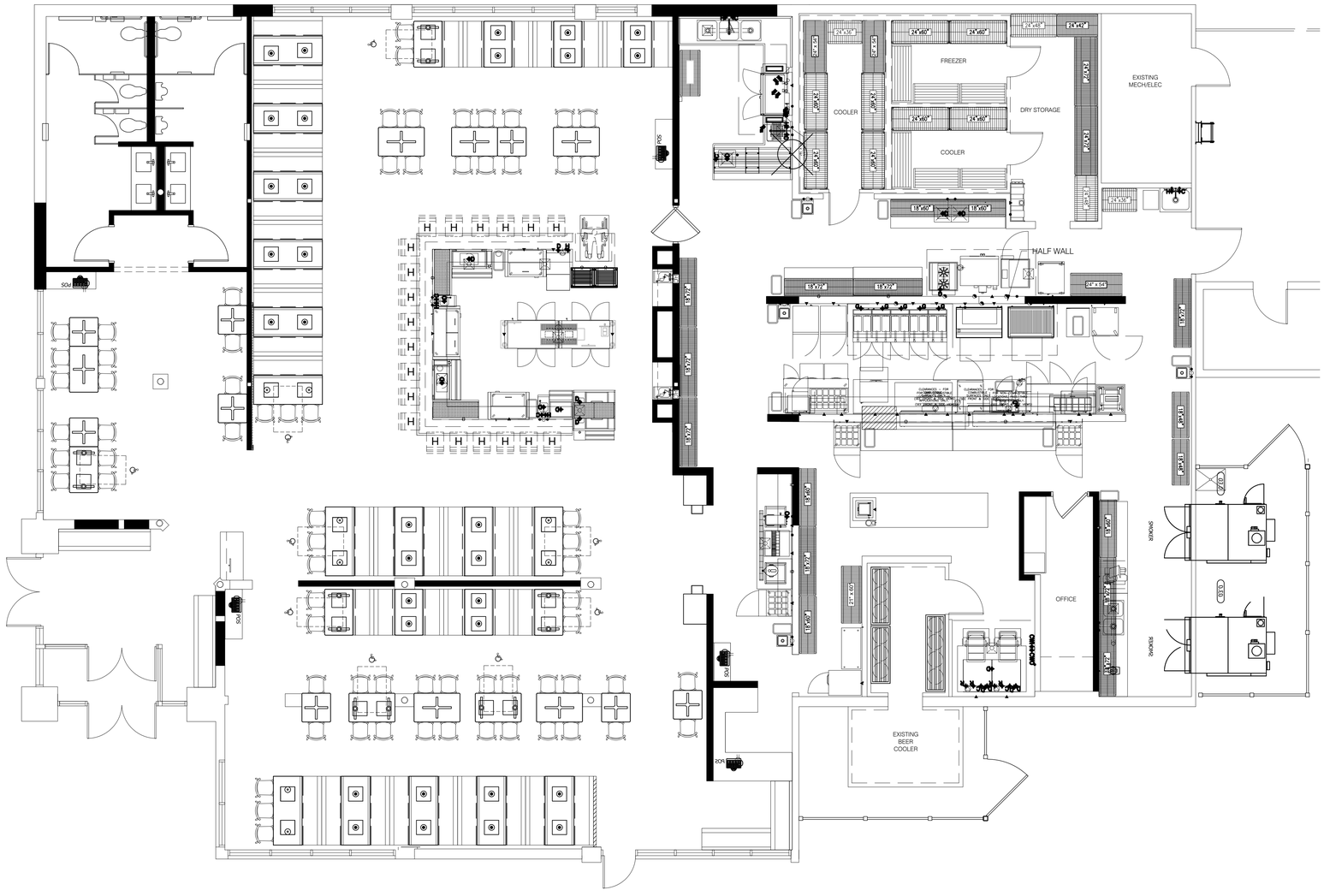

A1 LIFE SAFETY PLAN

SCALE: 3/16" = 1'-0"

IA ARCHITECTURE

SMOKEY BONES
UTICA, MI

STATE OF MICHIGAN
JEFF SPIKES
LICENSE NUMBER
1301069572
ARCHITECT

JEFF SPIKES, ARCHITECT
LICENSE NO. 1301069572

COPYRIGHT
THESE DOCUMENTS ARE PROTECTED BY UNITED STATES COPYRIGHT LAW. THEY HAVE BEEN PREPARED SPECIFICALLY FOR THE PROJECT IDENTIFIED AND ARE NOT SUITABLE FOR USE ON ANY OTHER PROJECT OR AT ANY OTHER LOCATION WITHOUT THE EXPRESS WRITTEN APPROVAL AND PARTICIPATION OF IARCHITECTURE. REPRODUCTION OF THESE DOCUMENTS MUST BE AUTHORIZED BY THE ARCHITECT. ALL RIGHTS ARE RESERVED TO IARCHITECTURE.

LIFE SAFETY PLAN

REVISIONS	
NO.	DATE

PROJECT NO: IA 2119

SHEET A0.01

DATE 11/12/21

NOTE: EXISTING BUILDING FOOTPRINT/SQUARE FOOTAGE, PARKING LOT LAYOUT, AND ENTRANCES TO MATCH EXISTING.

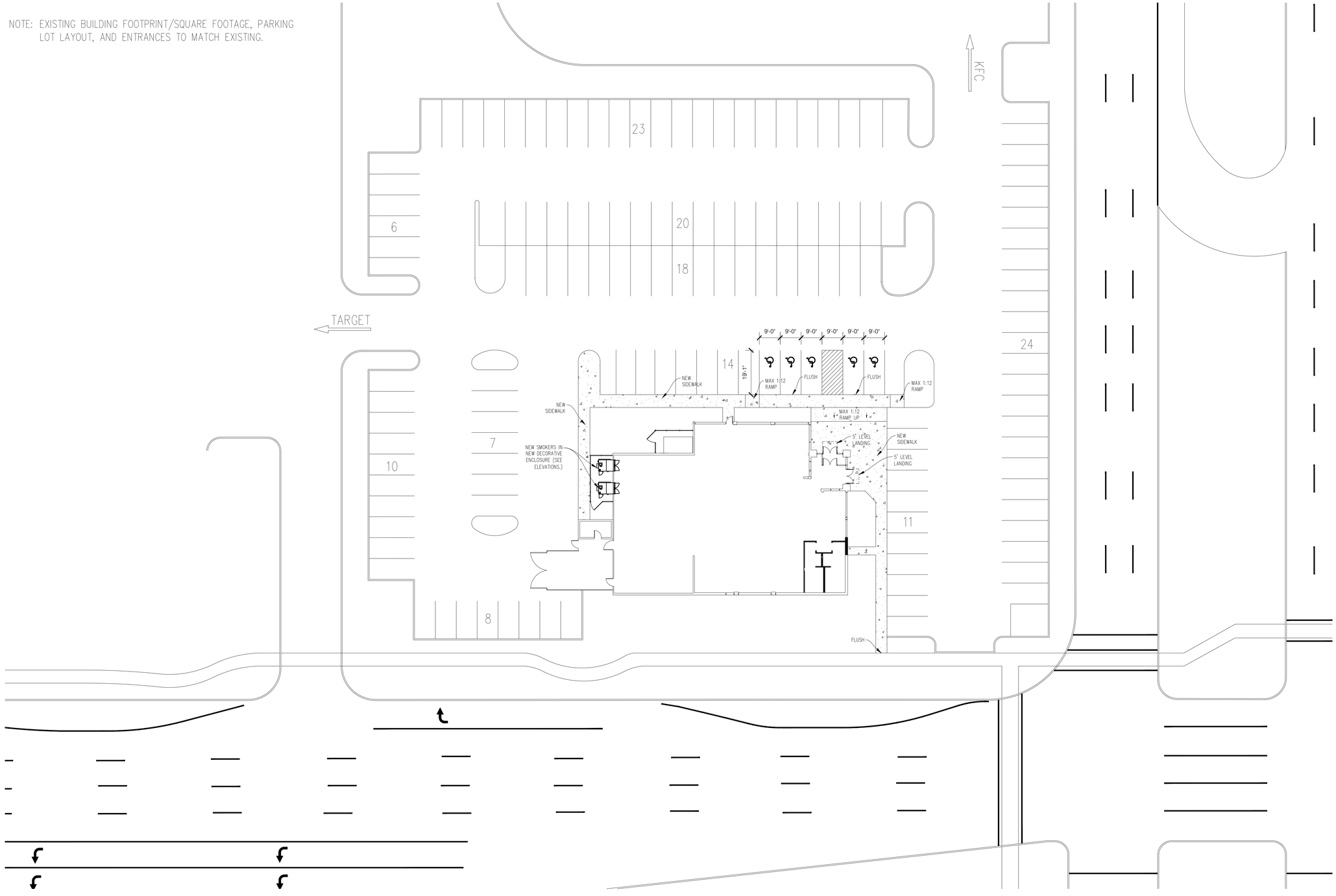

A1 SITE PLAN

SCALE: 1/16" = 1'-0"

iA ARCHITECTURE

SMOKEY BONES
UTICA, MI

STATE OF MICHIGAN
JEFF SPIKES
LICENSE NUMBER
1301069572
ARCHITECT

JEFF SPIKES, ARCHITECT
LICENSE NO. 1301069572

COPYRIGHT
THESE DOCUMENTS ARE PROTECTED BY UNITED STATES COPYRIGHT LAW. THEY HAVE BEEN PREPARED SPECIFICALLY FOR THE PROJECT IDENTIFIED AND ARE NOT SUITABLE FOR USE ON ANY OTHER PROJECT OR AT ANY OTHER LOCATION WITHOUT THE EXPRESS WRITTEN APPROVAL AND PARTICIPATION OF iARCHITECTURE. REPRODUCTION OF THESE DOCUMENTS MUST BE AUTHORIZED BY THE ARCHITECT. ALL RIGHTS ARE RESERVED TO iARCHITECTURE.

SITE PLAN

REVISIONS	
NO.	DATE

PROJECT NO: IA 2119

SHEET A1.01

DATE 11/12/21

NOTES:

- REMOVE ALL INTERIOR FINISHES IN FOH (FRONT OF HOUSE) AREAS AS REQUIRED BY EXTENT OF NEW WORK. THIS INCLUDES DINING ROOM, FRONT OF OFFICE, AND RESTROOMS.
- ANY EXISTING WALLS OR SECTIONS OF WALLS MARKED WITH \\\\\\\\ HATCH ARE TO BE DEMOLISHED AS REQUIRED BY EXTENT OF NEW WORK.
- ANY EXISTING ITEMS WHICH ARE TO REMAIN ARE TO BE PRESERVED AND PROTECTED FOR REUSE BY G.C.
- ALL EXTERIOR FINISHES TO BE REMOVED AS NECESSARY FOR INSTALLATION OF NEW FINISHES.

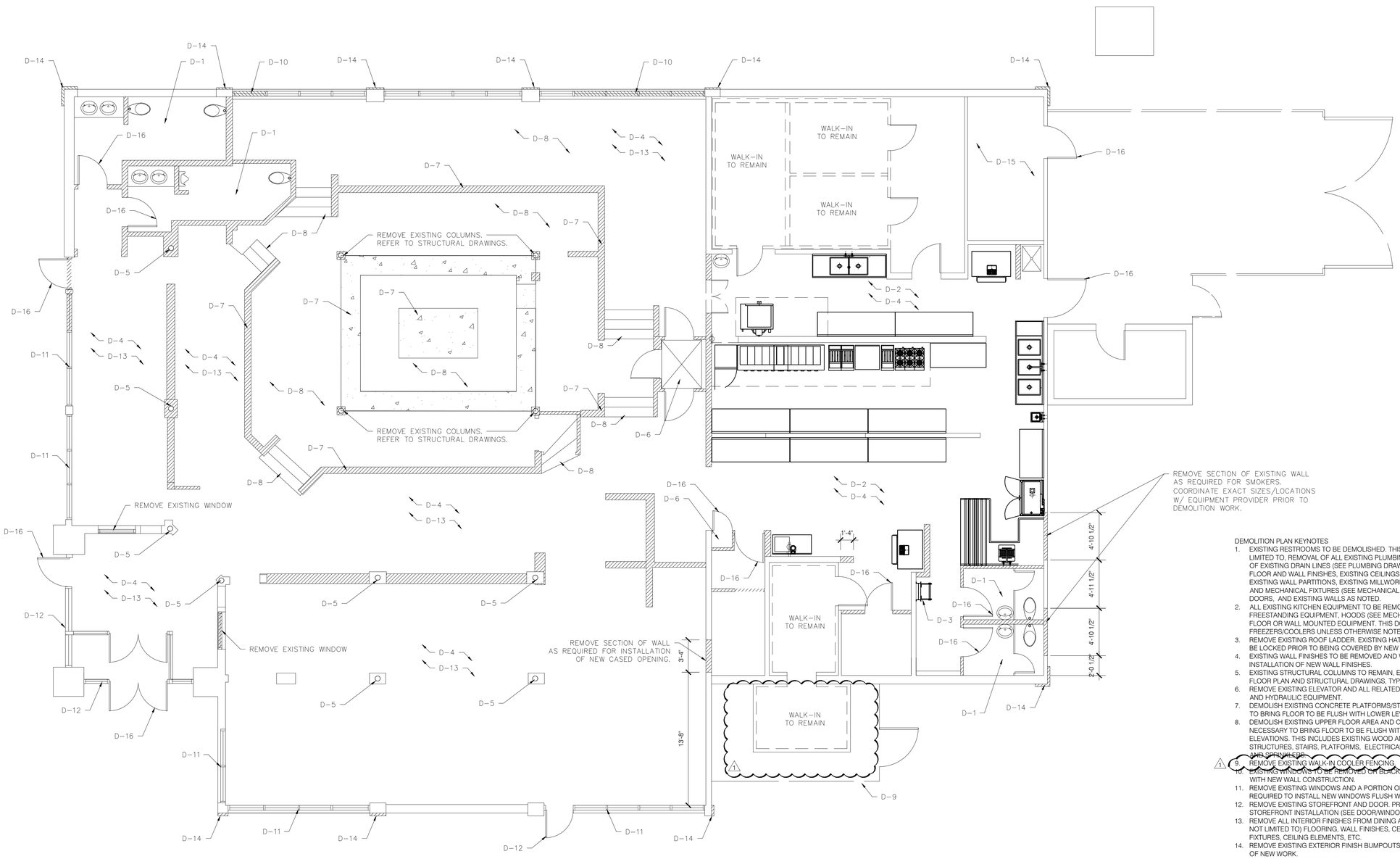

DEMOLITION PLAN KEYNOTES

1. EXISTING RESTROOMS TO BE DEMOLISHED. THIS INCLUDES, BUT IS NOT LIMITED TO, REMOVAL OF ALL EXISTING PLUMBING FIXTURES AND CAPPING OF EXISTING DRAIN LINES (SEE PLUMBING DRAWINGS), ALL EXISTING FLOOR AND WALL FINISHES, EXISTING CEILINGS AND CEILING FIXTURES, EXISTING WALL PARTITIONS, EXISTING MILLWORK, EXISTING DUCTWORK AND MECHANICAL FIXTURES (SEE MECHANICAL DRAWINGS), EXISTING DOORS, AND EXISTING WALLS AS NOTED.
2. ALL EXISTING KITCHEN EQUIPMENT TO BE REMOVED. THIS INCLUDES FREESTANDING EQUIPMENT, HOODS (SEE MECHANICAL DRAWINGS), AND FLOOR OR WALL MOUNTED EQUIPMENT. THIS DOES NOT INCLUDE WALK-IN FREEZERS/COOLERS UNLESS OTHERWISE NOTED.
3. REMOVE EXISTING ROOF LADDER. EXISTING HATCH DOOR TO REMAIN AND BE LOCKED PRIOR TO BEING COVERED BY NEW CEILING GRID.
4. EXISTING WALL FINISHES TO BE REMOVED AND WALLS TO BE PREPPED FOR INSTALLATION OF NEW WALL FINISHES.
5. EXISTING STRUCTURAL COLUMNS TO REMAIN, EXCEPT AS NOTED ON DEMO FLOOR PLAN AND STRUCTURAL DRAWINGS, TYPICAL.
6. REMOVE EXISTING ELEVATOR AND ALL RELATED ELECTRICAL, MECHANICAL, AND HYDRAULIC EQUIPMENT.
7. DEMOLISH EXISTING CONCRETE PLATFORMS/STEM WALLS AS NECESSARY TO BRING FLOOR TO BE FLUSH WITH LOWER LEVEL FLOOR ELEVATIONS.
8. DEMOLISH EXISTING UPPER FLOOR AREA AND CRAWLSPACE AS NECESSARY TO BRING FLOOR TO BE FLUSH WITH LOWER LEVEL FLOOR ELEVATIONS. THIS INCLUDES EXISTING WOOD AND CONCRETE STRUCTURES, STAIRS, PLATFORMS, ELECTRICAL, MECHANICAL, PLUMBING, AND SPRINKLER.
9. REMOVE EXISTING WALK-IN COOLER FENCING.
10. EXISTING WINDOWS TO BE REMOVED OR BLACKED OUT AND COVERED WITH NEW WALL CONSTRUCTION.
11. REMOVE EXISTING WINDOWS AND A PORTION OF EXISTING WALLS AS REQUIRED TO INSTALL NEW WINDOWS FLUSH WITH FINISH FLOOR.
12. REMOVE EXISTING STOREFRONT AND DOOR. PREPARE AREA FOR NEW STOREFRONT INSTALLATION (SEE DOOR/WINDOW SCHEDULES.)
13. REMOVE ALL INTERIOR FINISHES FROM DINING AREAS, INCLUDING (BUT NOT LIMITED TO) FLOORING, WALL FINISHES, CEILING GRID, LIGHT FIXTURES, CEILING ELEMENTS, ETC.
14. REMOVE EXISTING EXTERIOR FINISH BUMPOUTS AS REQUIRED BY EXTENT OF NEW WORK.
15. REMOVE ALL INTERIOR FINISHES AND REPLACE WITH NEW. EXISTING MECHANICAL/ELECTRICAL EQUIPMENT TO BE REMOVED PER MEP DEMO PLAN. SEE MECHANICAL/ELECTRICAL DRAWINGS.
16. REMOVE EXISTING DOOR(S).

A1 FLOOR PLAN

SCALE: 3/16" = 1'-0"

iA ARCHITECTURE

SMOKEY BONES
UTICA, MI

STATE OF MICHIGAN
JEFF SPIKES
LICENSE NUMBER
1301069572
ARCHITECT

JEFF SPIKES, ARCHITECT
LICENSE NO. 1301069572

COPYRIGHT
THESE DOCUMENTS ARE PROTECTED BY UNITED STATES COPYRIGHT LAW. THEY HAVE BEEN PREPARED SPECIFICALLY FOR THE PROJECT IDENTIFIED AND ARE NOT SUITABLE FOR USE ON ANY OTHER PROJECT OR AT ANY OTHER LOCATION WITHOUT THE EXPRESS WRITTEN APPROVAL AND PARTICIPATION OF iARCHITECTURE. REPRODUCTION OF THESE DOCUMENTS MUST BE AUTHORIZED BY THE ARCHITECT. ALL RIGHTS ARE RESERVED TO iARCHITECTURE.

DEMO
FLOOR
PLAN

REVISIONS	
NO.	DATE
1	1.27.2022

PROJECT NO: IA 2119

SHEET A2.00

DATE 11/12/21

NOTES:

- HATCHED WALLS DENOTE NEW WALL CONSTRUCTION
- KITCHEN TO HAVE ALL NEW WHITE FRP INSTALLED THROUGHOUT
- SMOKER ROOM TO HAVE STAINLESS STEEL WALL PANELS INSTALLED INSTEAD OF FRP.
- MECHANICAL/SPRINKLER ROOM TO HAVE NEW FRP OR APPROVED EQUAL INSTALLED

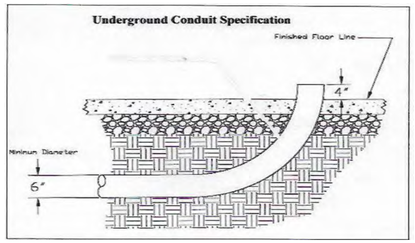

D4 UNDERGROUND BEER/SODA CONDUIT DETAIL

SCALE: N.T.S.

UNDERGROUND BEER/SODA CONDUIT NOTES

- G.C. IS RESPONSIBLE TO COORDINATE INFORMATION WITH PLUMBERS AND FOUNDATION CONTRACTORS FOR INSTALLATION.
- PLUMBERS MUST USE 6" ELECTRICAL PVC PIPE THAT IS SEAMLESS ON INSIDE OF THE PIPE JOINTS.
- ALL JOINTS MUST BE SOLVENT CEMENTED IN ACCORDANCE WITH PVC MANUFACTURER'S RECOMMENDATIONS TO GUARANTEE A WATERTIGHT CHASE.
- ONLY ONE 90° ELECTRICAL SWEEP MAY BE USED AT EACH END OF THE CHASE.
- BACK TO BACK SWEEPS SWITCHING DIRCTIONS CANNOT BE USED.
- CONDUIT MUST BE CAPPED AND SEALED AT BOTH ENDS DURING CONSTRUCTION.
- INSTALLER MUST TRIM EXPOSED ENDS TO FOUR INCHES ABOVE FINISHED FLOOR DURING PRODUCT LINE INSTALLATION.
- THE SWEEPS MUST BE 90° ELECTRICAL SWEEPS AS SHOW IN ILLUSTRATION.
- AT NO TIME CAN YOU USE ANY STRAIGHT 90 DEGREE BENDS - THEY MUST BE SWEEPING.
- COORDINATE EXACT LOCATIONS WITH OWNER AND/OR EQUIPMENT PROVIDER PRIOR TO CONDUIT CHASE INSTALLATION.

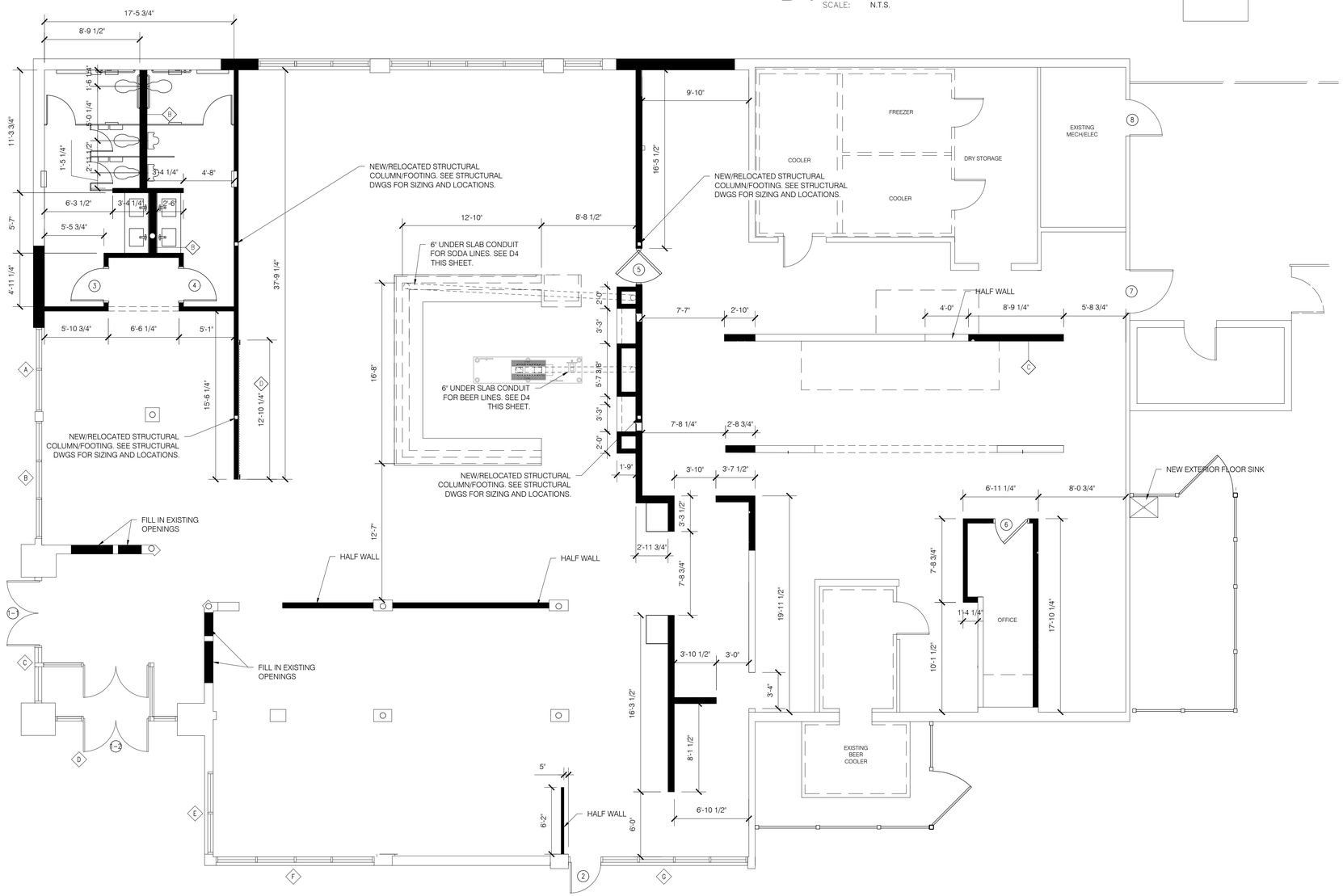

A1 FLOOR PLAN

SCALE: 3/16" = 1'-0"

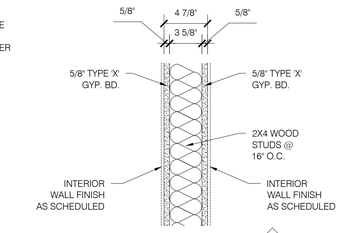

D5 INTERIOR WALL TYPE A

SCALE: 1-1/2" = 1'-0"

TYPICAL UNLESS OTHERWISE NOTED

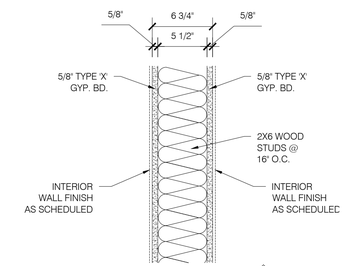

C5 INTERIOR WALL TYPE B

SCALE: 1-1/2" = 1'-0"

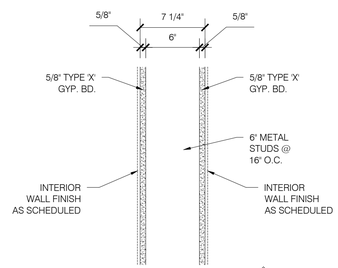

B5 INTERIOR WALL TYPE C

SCALE: 1-1/2" = 1'-0"

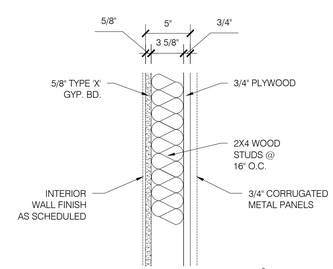

A5 INTERIOR WALL TYPE D

SCALE: 1-1/2" = 1'-0"

iA ARCHITECTURE

SMOKEY BONES
UTICA, MI

STATE OF MICHIGAN
JEFF SPIKES
NUMBER
1301069572
ARCHITECT

JEFF SPIKES, ARCHITECT
LICENSE NO. 1301069572

COPYRIGHT
THESE DOCUMENTS ARE PROTECTED BY UNITED STATES COPYRIGHT LAW. THEY HAVE BEEN PREPARED SPECIFICALLY FOR THE PROJECT IDENTIFIED AND ARE NOT SUITABLE FOR USE ON ANY OTHER PROJECT OR AT ANY OTHER LOCATION WITHOUT THE EXPRESS WRITTEN APPROVAL AND PARTICIPATION OF iARCHITECTURE. REPRODUCTION OF THESE DOCUMENTS MUST BE AUTHORIZED BY THE ARCHITECT. ALL RIGHTS ARE RESERVED TO iARCHITECTURE.

FLOOR PLAN

REVISIONS	
NO.	DATE

PROJECT NO: IA 2119

SHEET A2.01

DATE 11/12/21

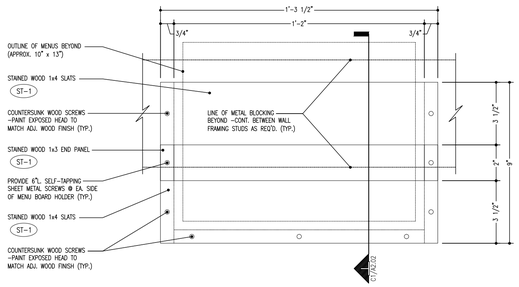

D1 TYP. MENU HOLDER

SCALE: 3" = 1'-0"

NOTE:
4 TOTAL MENU HOLDERS

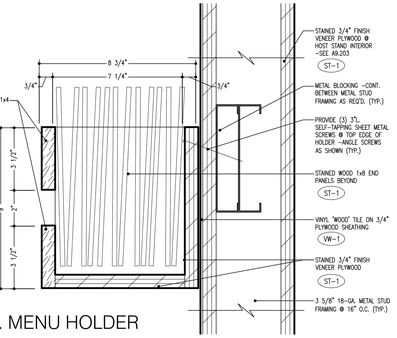

D2 TYP. MENU HOLDER

SCALE: 3" = 1'-0"

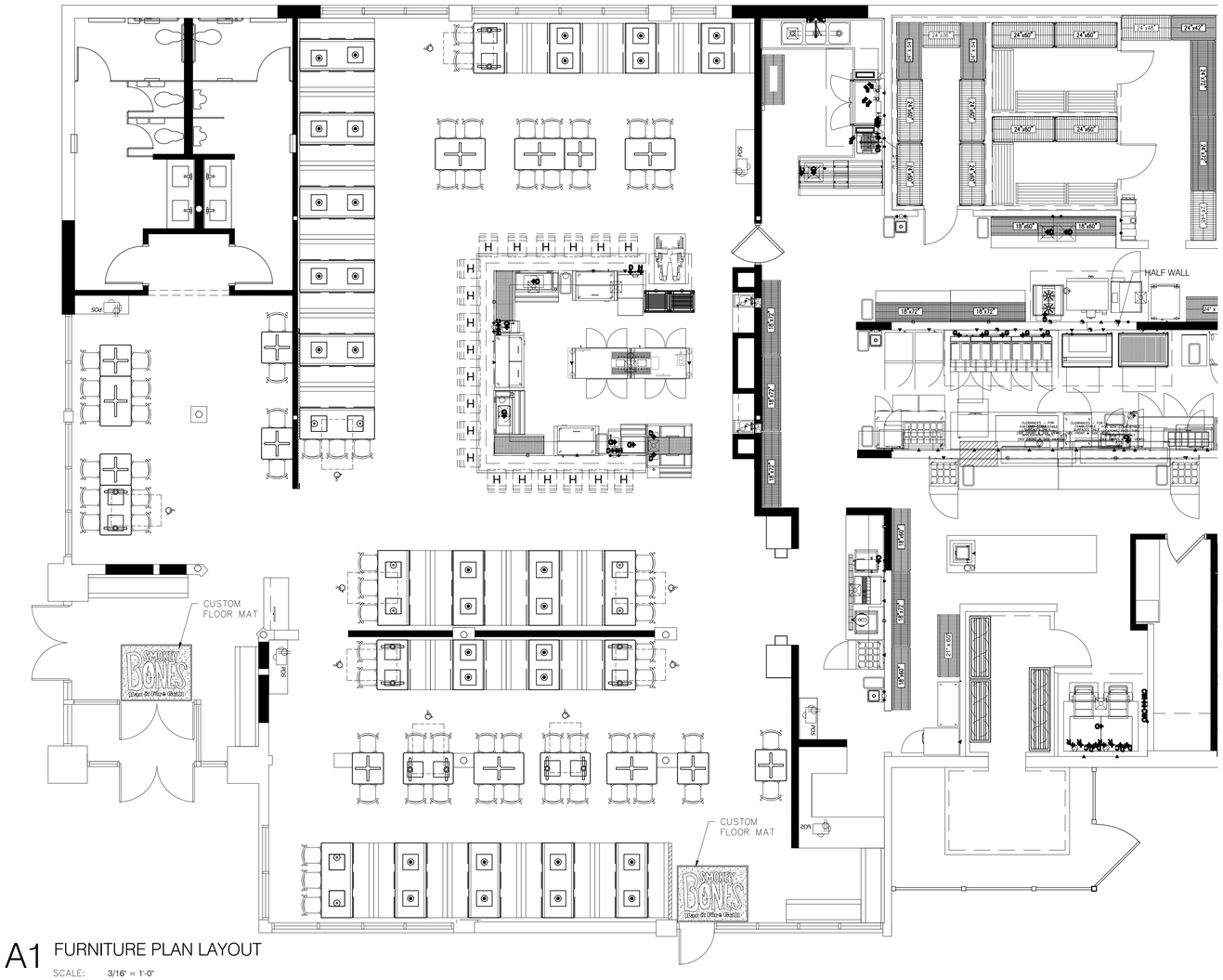

A1 FURNITURE PLAN LAYOUT

SCALE: 3/16" = 1'-0"

MAIN DINING SEATING & TABLE SCHEDULE		
SEATING TYPE:	TABLES	SEATS
ONE'S	21	**21**
TWO'S	8	**16**
THREE'S	0	**0**
FOUR'S	17	**68**
FIVE'S	0	**0**
SIX'S	15	**90**
EIGHT'S	0	**0**
TOTALS:	**61**	**195**
SEATING RATIO:		**3.2**
5% ACCESSIBLE SEATING: (4 ADA Seats Req. for 51-60 Seats)		**9.8**
ACCESSIBLE SEATING: (REQUIRED TO ROUND UP)		10

iA ARCHITECTURE

SMOKEY BONES
UTICA, MI

STATE OF MICHIGAN
JEFF SPIKES
LICENSE NUMBER
13010695
ARCHITECT

JEFF SPIKES, ARCHITECT
LICENSE NO. 1301069572

COPYRIGHT
THESE DOCUMENTS ARE PROTECTED BY UNITED STATES COPYRIGHT LAW. THEY HAVE BEEN PREPARED SPECIFICALLY FOR THE PROJECT IDENTIFIED AND ARE NOT SUITABLE FOR USE ON ANY OTHER PROJECT OR AT ANY OTHER LOCATION WITHOUT THE EXPRESS WRITTEN APPROVAL AND PARTICIPATION OF iARCHITECTURE. REPRODUCTION OF THESE DOCUMENTS MUST BE AUTHORIZED BY THE ARCHITECT. ALL RIGHTS ARE RESERVED TO iARCHITECTURE.

FURNITURE PLAN LAYOUT

REVISIONS	
NO.	DATE

PROJECT NO: IA 2119

SHEET A2.02

DATE 11/12/21

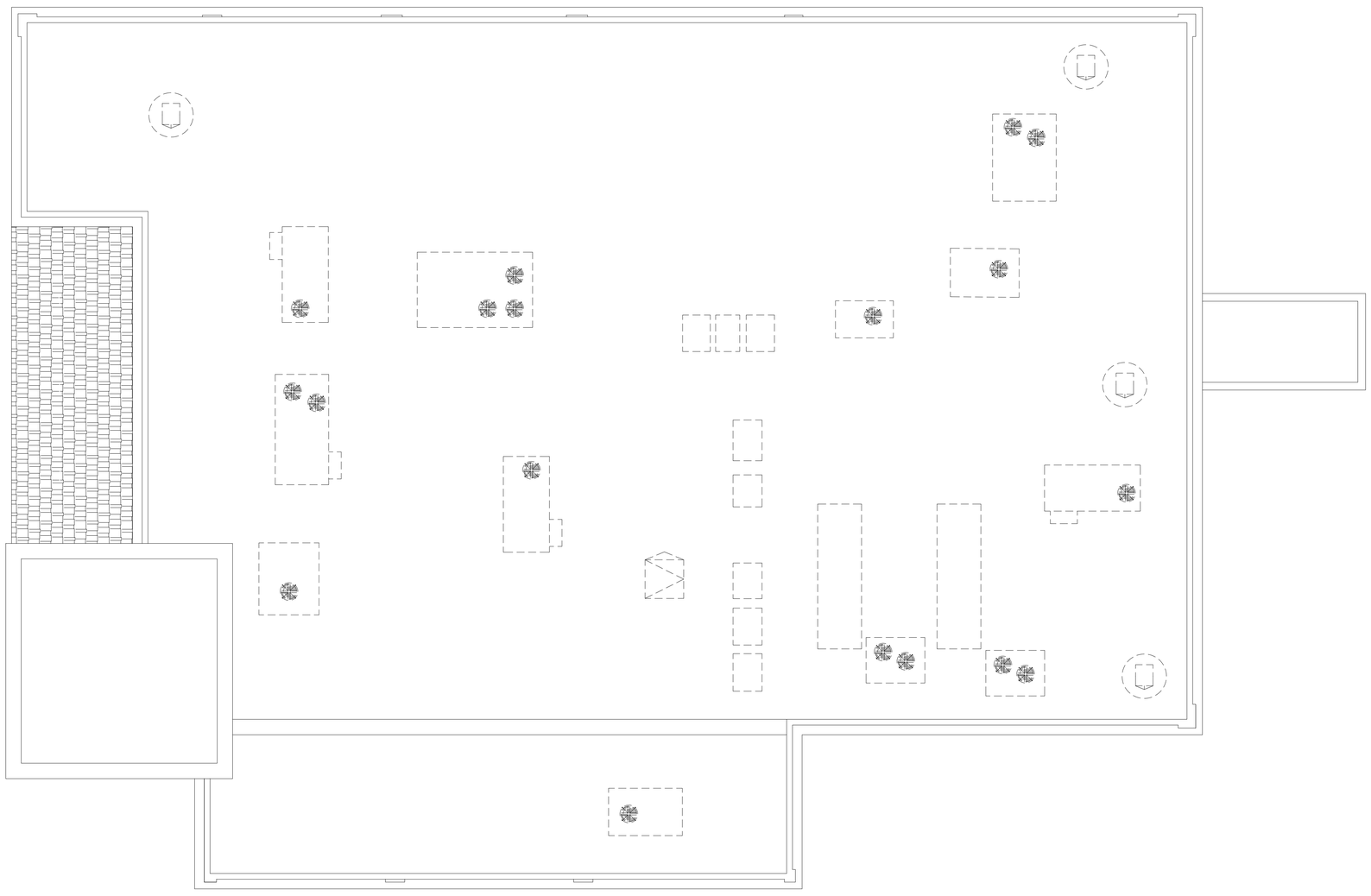

A1 EXISTING ROOF PLAN

SCALE: 3/16" = 1'-0"

iA ARCHITECTURE

SMOKEY BONES
UTICA, MI

STATE OF MICHIGAN
JEFF SPIKES
NUMBER
1301069572
ARCHITECT

JEFF SPIKES, ARCHITECT
LICENSE NO. 1301069572

COPYRIGHT
THESE DOCUMENTS ARE PROTECTED BY UNITED STATES COPYRIGHT LAW. THEY HAVE BEEN PREPARED SPECIFICALLY FOR THE PROJECT IDENTIFIED AND ARE NOT SUITABLE FOR USE ON ANY OTHER PROJECT OR AT ANY OTHER LOCATION WITHOUT THE EXPRESS WRITTEN APPROVAL AND PARTICIPATION OF iARCHITECTURE. REPRODUCTION OF THESE DOCUMENTS MUST BE AUTHORIZED BY THE ARCHITECT. ALL RIGHTS ARE RESERVED TO iARCHITECTURE.

EXISTING
ROOF PLAN

REVISIONS	
NO.	DATE

PROJECT NO:
IA 2119

SHEET
A2.03

DATE 11/12/21

KEY NOTES

REV	KEY	SPEC.	DESCRIPTION
	1		SINGLE PLY ROOFING MEMBRANE (DUROLAST OR APPROVED EQUIVALENT) OVER 4" RIGID INSULATION
	2		NEW STANDING SEAM METAL ROOF
	3		6" PREFINISHED ALUMINUM GUTTER
	4		6" PREFINISHED ALUMINUM DOWNSPOUT
	5		EXISTING ROOF ACCESS HATCH TO BE LATCHED AND SEALED
	6		NEW EXHAUST FANS
	7		NEW EXTERIOR ROOF ACCESS LADDER
	8		NEW ROOF TOP UNIT (RTU)
	9		CONT. WALL SCREEN FRAME ANCHORED TO PARAPET WALL
	10		CONT. BREAK METAL PARAPET COPING (COLOR: DARK BRONZE TYP.)
	11		STEEL TRELLIS (REFER TO SECTIONS)
	12		CANVAS AWNING. G.C. TO FIELD VERIFY DIMENSIONS PRIOR TO ORDERING/PRODUCTION.
	13		NEW METAL AWNINGS. G.C. TO FIELD VERIFY DIMENSIONS PRIOR TO ORDERING/PRODUCTION.

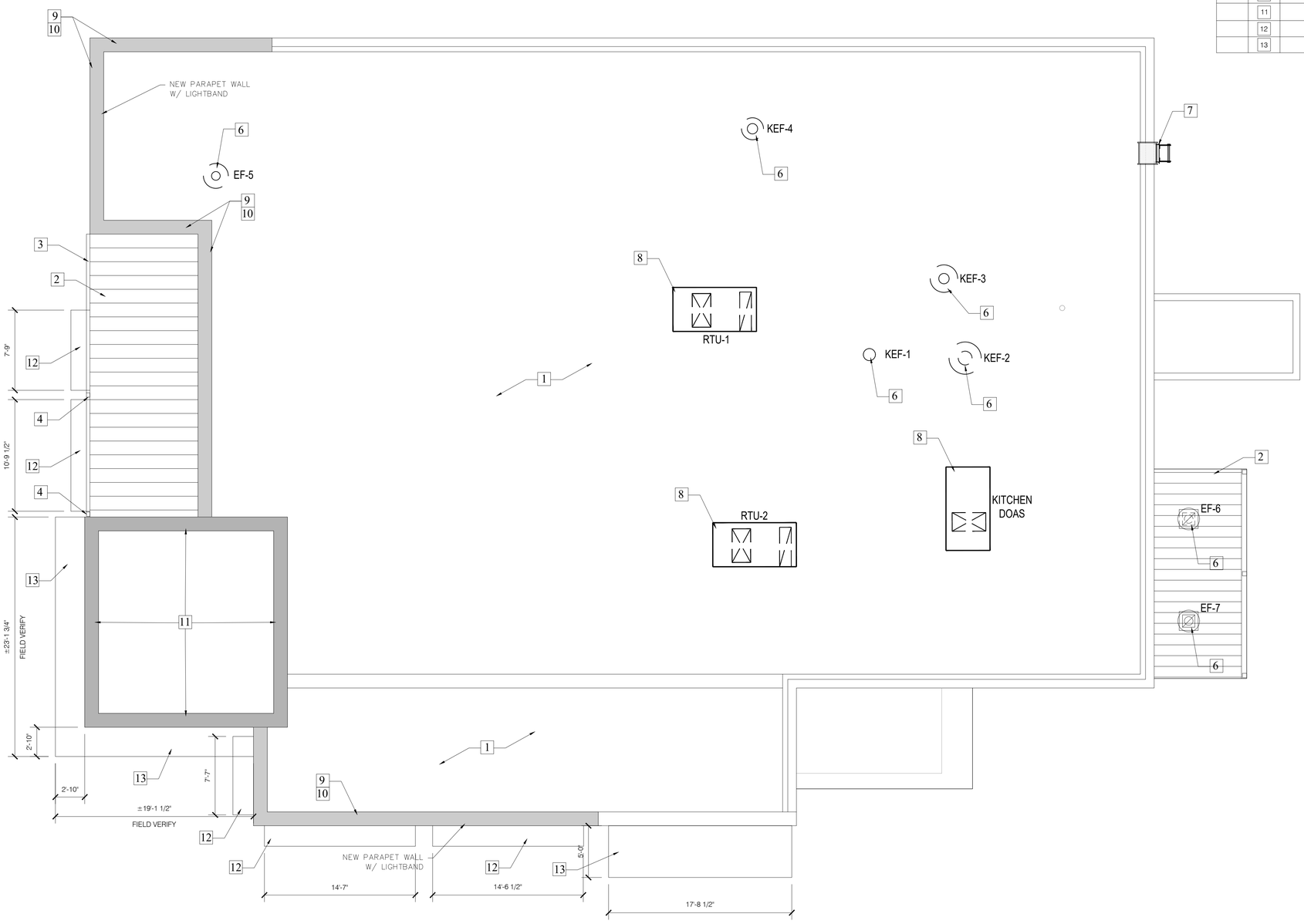

A1 ROOF PLAN

SCALE: 3/16" = 1'-0"

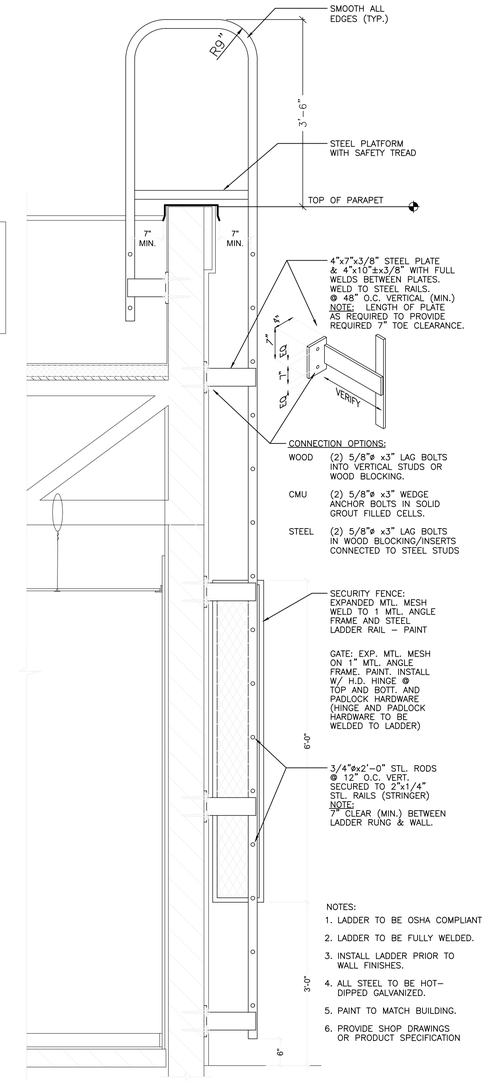

NOTES:

1. LADDER TO BE OSHA COMPLIANT
2. LADDER TO BE FULLY WELDED.
3. INSTALL LADDER PRIOR TO WALL FINISHES.
4. ALL STEEL TO BE HOT–DIPPED GALVANIZED.
5. PAINT TO MATCH BUILDING.
6. PROVIDE SHOP DRAWINGS OR PRODUCT SPECIFICATION

A5 ROOF LADDER DETAIL

SCALE: 3/4" = 1'-0"

ARCHITECTURE

SMOKEY BONES
UTICA, MI

STATE OF MICHIGAN
JEFF SPIKES
LICENSE NUMBER
1301069572
ARCHITECT

JEFF SPIKES, ARCHITECT
LICENSE NO. 1301069572

COPYRIGHT
THESE DOCUMENTS ARE PROTECTED BY UNITED STATES COPYRIGHT LAW. THEY HAVE BEEN PREPARED SPECIFICALLY FOR THE PROJECT IDENTIFIED AND ARE NOT SUITABLE FOR USE ON ANY OTHER PROJECT OR AT ANY OTHER LOCATION WITHOUT THE EXPRESS WRITTEN APPROVAL AND PARTICIPATION OF IARCHITECTURE. REPRODUCTION OF THESE DOCUMENTS MUST BE AUTHORIZED BY THE ARCHITECT. ALL RIGHTS ARE RESERVED TO IARCHITECTURE.

ROOF PLAN

REVISIONS	
NO.	DATE

PROJECT NO: IA 2119

SHEET A2.04

DATE 11/12/21

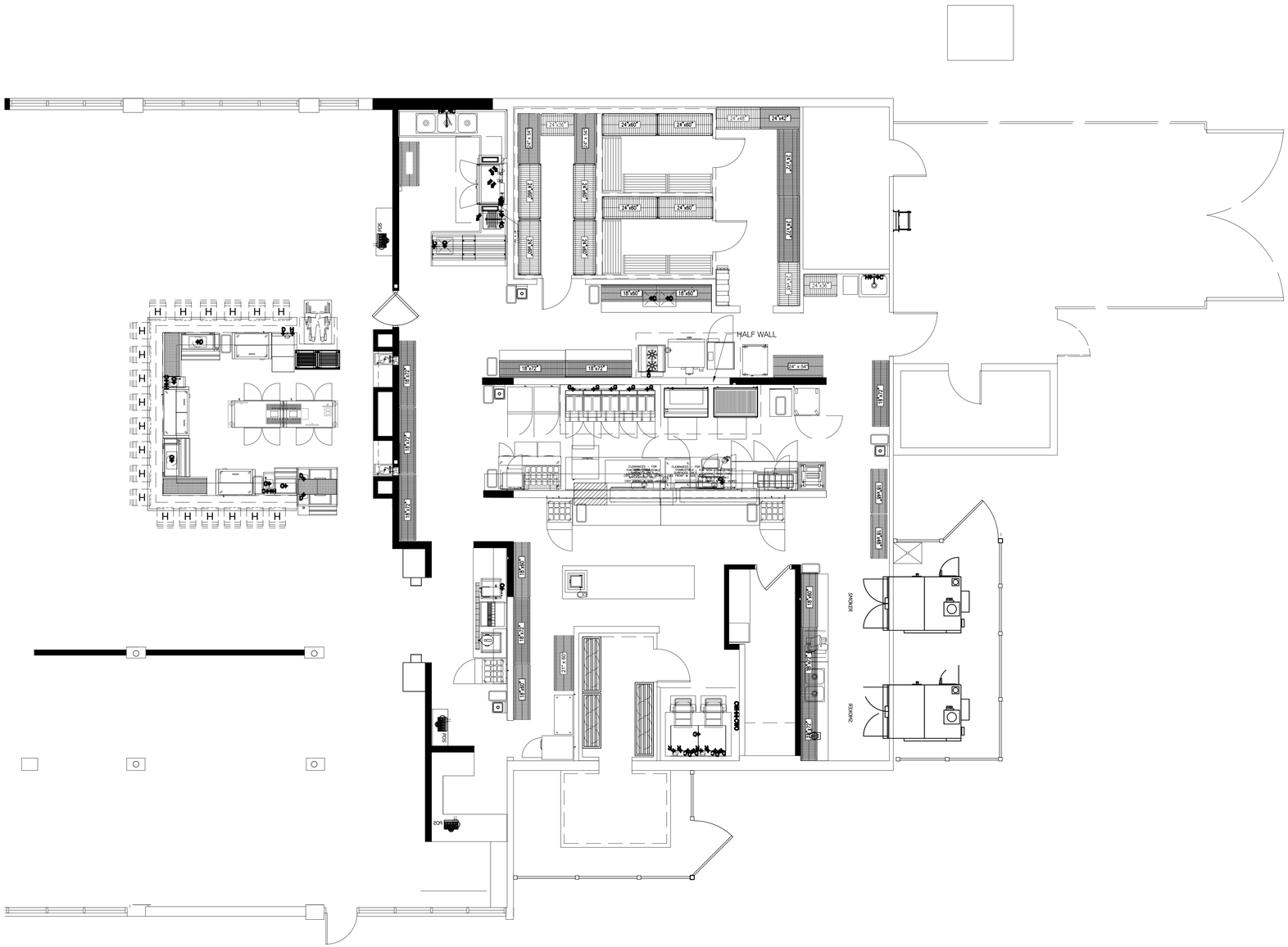

A1 KITCHEN EQUIPMENT PLAN

SCALE: 3/16" = 1'-0"

iARCHITECTURE

SMOKEY BONES
UTICA, MI

STATE OF MICHIGAN
JEFF SPIKES
LICENSE NUMBER
13010698/2
ARCHITECT

JEFF SPIKES, ARCHITECT
LICENSE NO. 1301069872

COPYRIGHT
THESE DOCUMENTS ARE PROTECTED BY UNITED STATES COPYRIGHT LAW. THEY HAVE BEEN PREPARED SPECIFICALLY FOR THE PROJECT IDENTIFIED AND ARE NOT SUITABLE FOR USE ON ANY OTHER PROJECT OR AT ANY OTHER LOCATION WITHOUT THE EXPRESS WRITTEN APPROVAL AND PARTICIPATION OF IARCHITECTURE. REPRODUCTION OF THESE DOCUMENTS MUST BE AUTHORIZED BY THE ARCHITECT. ALL RIGHTS ARE RESERVED TO IARCHITECTURE.

KITCHEN EQUIPMENT PLAN

REVISIONS	
NO.	DATE

PROJECT NO: IA 2119

SHEET A2.05

DATE 11/12/21

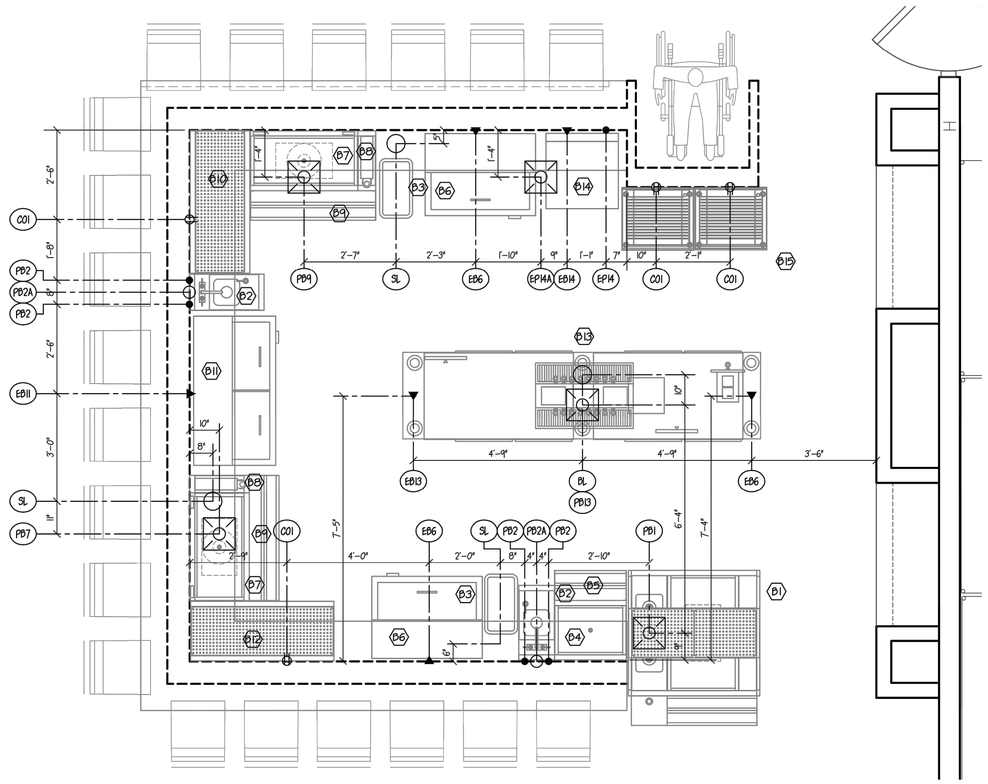

B1 BAR ROUGH-IN PLAN

SCALE: 1/2" = 1'-0"

SYMBOL LEGEND

- ELECTRICAL SERVICE
- ELECTRICAL (DROP FROM ABOVE)
- EMERGENCY PULL STATION
- WATER SERVICE
- DIRECT WASTE
- FLOOR DRAIN
- FLOOR SINK
- GAS SERVICE

ABBREVIATIONS

A.F.F.	ABOVE FINISHED FLOOR
D.F.A.	DROP FROM ABOVE
AMPS	AMPERAGE
KW	KILOWATTS
V	VOLTS
PH	PHASE
H.P.	HORSE POWER
EPS	EMERGENCY PULL STATION
F.F.E.C.	FOODSERVICE FACILITY EQUIPMENT CONTRACTOR
G.C.	GENERAL CONTRACTOR
E.C.	ELECTRICAL CONTRATOR
P.C.	PLUMBING CONTRACTOR
M.C.	MECHANICAL CONTRACTOR

ROUGH-IN NOTES

KITCHEN EQUIPMENT ELECTRICAL ROUGH-IN NOTES:

C0 120V-1PH 15 AMP DUPLEX RECP. @ (+48" A.F.F.) FOR "CONVENIENCE OUTLET".

C01 120V-1PH 15 AMP DUPLEX RECP. @ (+40" A.F.F.) UNDER BAR TOP FOR "CONVENIENCE OUTLET".

ES1 120V-1PH 15 AMP DUPLEX RECP. @ (+72" A.F.F.) FOR SODA SYSTEM. THIS ITEM IS NOT PART OF THIS CONTRACT AND IS TO BE SUPPLIED AND INSTALLED BY VENDOR. ROUGH-IN SHOWN FOR COORDINATION PURPOSES ONLY.

E5 120V-1PH 1/3 H.P. 4.8 AMP RECP. @ (+48" A.F.F.) FOR SLICER (ITEM #5).

E6 (2 LOCATIONS) 120V-1PH SERVICE: @ (+72" A.F.F.) E.C. TO EXTEND TO ICE MAKER (ITEM #6). (SEE GENERAL NOTES 11,12,13,14 & 15).

E6A 208V-3PH 12.5 AMP SERVICE (VERIFY LOCATION) E.C. TO EXTEND TO ICE MAKER COMPRESSOR (ITEM #6A). (SEE GENERAL NOTES 11,12,13,14 & 15).

E8 120V-1PH 2.0KW 16.7 AMP RECP. @ (+18" A.F.F.) FOR HEATED PROOFING CABINET (ITEM #8).

E12 120V-1PH 1 H.P. 7 AMP RECP. @ (+48" A.F.F.) FOR FOOD PROCESSOR (ITEM #12).

E14 (2 LOCATIONS) 120V-1PH 7.7 AMP RECP. @ (+18" & +36" A.F.F.) FOR DOUBLE DECK CONVECTION OVEN (ITEM #14).

E15 120V-1PH 12 AMP RECP. @ (+18" A.F.F) FOR REFRESHMALIZER (ITEM #15).

E27 120V-1PH 1/5 H.P. 2.46 AMP RECP. @ (+18" A.F.F.) FOR REFRIGERATED PREP TABLE (ITEM #27).

E28 120V-1PH 1/4 H.P. 5.2 AMP RECP. @ (+18" A.F.F.) FOR REFRIGERATOR (ITEM #28).

E29 120V-1PH 1/3 H.P. 6.3 AMP RECP. @ (+18" A.F.F.) FOR FREEZER (ITEM #29).

E30 (2 LOCATIONS) 120V-1PH 1.7 AMP SERVICE: @ (+18" A.F.F.) E.C. TO EXTEND TO FRYER BATTERY (ITEM #30). (SEE GENERAL NOTES 11,12,13,14 & 15).

E30A 120V-1PH 1/3 H.P. 7 AMP SERVICE: @ (+18" A.F.F.) E.C. TO EXTEND TO FRYER FILTER (ITEM #30). (SEE GENERAL NOTES 11,12,13,14 & 15).

E31 120V-1PH 2.912 KW 19.3 AMP RECP. @ (+18" A.F.F.) FOR HEATED CABINET (ITEM #31).

E33 (2 LOCATIONS) 120V-1PH 1/5 H.P. 2.5 AMP RECP. @ (+18" A.F.F.) FOR REFRIGERATED EQUIPMENT (ITEM #33).

E36 208V-1PH 3.6 KW SERVICE: @ (+66" A.F.F.) E.C. TO EXTEND TO CHEESEMELTER (ITEM #36). (SEE GENERAL NOTES 11,12,13,14 & 15).

E38 208V-1PH 2.6 KW 12.5 AMP SERVICE: @ (+48" A.F.F.) E.C. TO EXTEND TO CONVEYOR TOASTER (ITEM #38). (SEE GENERAL NOTES 11,12,13,14 & 15).

E40 (5 LOCATIONS) 208V-1PH 3 KW 20 AMP RECP. @ (+72" A.F.F.) FOR MICROWAVE OVEN (ITEM #40).

E41 120V-1PH 1/3 H.P. 6.1 AMP RECP. @ (+18" A.F.F.) FOR REFRIGERATED PREP TABLE (ITEM #41).

E42 120V-1PH 1.65 KW 13.75 AMP SERVICE: @ (+24" A.F.F.) E.C. TO EXTEND TO HOT FOOD WELL (ITEM #42). (SEE GENERAL NOTES 11,12,13,14 & 15).

E43 (2 LOCATIONS) 120V-1PH .35 KW SERVICE: @ (+72" A.F.F.) E.C. TO EXTEND TO OVERHEAD HEAT LAMP (ITEM #43). (SEE GENERAL NOTES 11,12,13,14 & 15).

E44 120V-1PH 1.692 KW 14.1 AMP RECP. @ (+18" A.F.F.) FOR WARMING CABINET (ITEM #44).

E45 (2)208V-1PH 3.51 KW SERVICE: @ (+72" A.F.F.) E.C. TO EXTEND TO OVERHEAD HEAT LAMP (ITEM #45). (SEE GENERAL NOTES 11,12,13,14 & 15).

E45.1 (2)208V-1PH 3.51 KW SERVICE: @ (+72" A.F.F.) E.C. TO EXTEND TO OVERHEAD HEAT LAMP (ITEM #45). (SEE GENERAL NOTES 11,12,13,14 & 15).

E46 120V-1PH .75 KW 8 AMP RECP. @ (+24" A.F.F.) FOR WARMING DRAWER (ITEM #46).

E49 208V-1PH 3.6 KW SERVICE: @ (+66" A.F.F.) E.C. TO EXTEND TO CHEESEMELTER (ITEM #49). (SEE GENERAL NOTES 11,12,13,14 & 15).

E50 120V-1PH 1/3 H.P. 6.1 AMP RECP. @ (+18" A.F.F.) FOR REFRIGERATED PREP TABLE (ITEM #50).

E54 (STUB-UP) 120V-1PH .1 KW 1 AMP FLUSH MOUNTED RECP. FOR DIPPER WELL (ITEM #54).

E56 (STUB-UP) 120V-1PH 1/4 H.P. 3.5 AMP FLUSH MOUNTED RECP. FOR ICE CREAM DIPPING CABINET (ITEM #56).

E59 120V-1PH 1/4 H.P. 5.2 AMP RECP. @ (+18" A.F.F.) FOR REFRIGERATOR (ITEM #59).

E64 120V-1PH 1/5 H.P. 2.46 AMP RECP. @ (+18" A.F.F.) FOR REFRIGERATED PREP TABLE (ITEM #64).

E67 120V-1PH 1.67 KW 14 AMP SERVICE: @ (+48" A.F.F.) E.C. TO EXTEND TO COFFEE MAKER (ITEM #67). (SEE GENERAL NOTES 11,12,13,14 & 15). ROUGH-IN SHOWN ARE FOR COORDINATION PURPOSES ONLY. THIS ITEM IS TO BE PROVIDED AND INSTALLED BY OTHERS. VERIFY LOCATION WITH PROVIDER.

E68 120V-1PH 15 AMP RECP. @ (+48" A.F.F.) FOR SODA DISPENSER (ITEM #68). ROUGH-IN SHOWN ARE FOR COORDINATION PURPOSES ONLY. THIS ITEM IS TO BE PROVIDED AND INSTALLED BY OTHERS. VERIFY LOCATION WITH PROVIDER.

E78 208V-1PH 2 HP 5 KW 43 AMP SERVICE: @ (+60" A.F.F.) E.C. TO EXTEND TO DISHMACHINE (ITEM #78) TANK HEAT & MOTOR CONNECT. (SEE GENERAL NOTES 11,12,13,14 & 15). ROUGH-IN SHOWN ARE FOR COORDINATION PURPOSES ONLY. THIS ITEM IS TO BE PROVIDED AND INSTALLED BY OTHERS. VERIFY LOCATION WITH PROVIDER.

E87 (DROP FROM ABOVE) 120V-1PH 16 AMP SERVICE TO (+108" A.F.F.) E.C. TO CONNECT TO JUNCTION BOX ON TOP OF WALK-IN COOLER (ITEM #87). E.C. TO EXTEND FROM JUNCTION BOX TO K.E.C. FURNISHED LIGHTS AS REQUIRED. LOCATION AND QUANTITY OF LIGHTS TO BE VERIFIED WITH MANUFACTURER'S SHOP DRAWINGS. E.C. TO WIRE PERIMETER DOOR HEATER (SEE GENERAL NOTES 20 & 21). E.C. TO PROVIDE AND EXTEND ALL FINAL ELECTRICAL HOOK-UPS AND DISCONNECTS. ALL WIRING AND CONDUIT SHALL BE INSTALLED ABOVE AND ON THE OUTSIDE OF THE UNIT CEILING. ALL PENETRATIONS THRU WALLS AND CEILING ARE TO BE EQUIPPED WITH "SEAL-OFF" AND SEALED WITH SILICONE AT EACH JUNCTION BOX. K.E.C. SHALL PROVIDE E.C. WITH A SUFFICIENT NUMBER OF LIGHT FIXTURES TO PROVIDE A MINIMUM OF SEVENTY (70) FOOT CANDLES OF LIGHT INTENSITY MEASURED AT 30" A.F.F. AT ANY POINT IN THE COMPARTMENT. APPROXIMATELY ONE (1) 100 WATT LIGHT FIXTURE PER FIFTY (50) SQUARE FEET (NOT INCLUDING LIGHT FIXTURE ABOVE DOOR).

E87A (DROP FROM ABOVE) 208V-1PH 4.9 AMP SERVICE TO (+96" A.F.F.) WALK-IN COOLER COIL (ITEM #87A). E.C. TO RUN CONTROL WIRES FROM COOLER COIL (ITEM #87A) TO THERMOSTAT ON COOLER COMPRESSORS (ITEM #87B). E.C. TO FIELD VERIFY LOCATION. (SEE GENERAL NOTES 20 & 21).

E87B 208V-1PH 1/2 HP. 5.7 AMP SERVICE TO WALK-IN COOLER COMPRESSOR (ITEM #87B). E.C. TO EXTEND TO K.E.C. FURNISHED FUSED DISCONNECT SWITCH. E.C. TO FIELD VERIFY LOCATION. (SEE GENERAL NOTES 20 & 21).

BAR EQUIPMENT ELECTRICAL ROUGH-IN NOTES:

E86 (2 LOCATIONS) 120V-1PH 1/5 H.P. 5.4 AMP RECP. @ (+18" A.F.F.) FOR BOTTLE COOLER (ITEM #86).

E811 120V-1PH 1/3 H.P. 6 AMP RECP. @ (+18" A.F.F.) FOR BOTTLE COOLER (ITEM #811).

E813 (2 LOCATIONS) (STUB-UP) 120V-1PH 1/4 H.P. 3.7 AMP FLUSH MOUNTED RECP. FOR BACK BAR COOLER (ITEM #813).

E814 120V-1PH 1 H.P. 12 AMP RECP. @ (+24" A.F.F.) FOR GLASS WASHER (ITEM #814). ROUGH-IN SHOWN ARE FOR COORDINATION PURPOSES ONLY. THIS ITEM IS TO BE PROVIDED AND INSTALLED BY OTHERS. VERIFY LOCATION WITH PROVIDER.

K1 P.C. TO INSTALL K.E.C. FURNISHED MECHANICAL GAS SHUT-OFF VALVE IN MAIN GAS SUPPLY LINE IN ACCESSIBLE LOCATION PRIOR TO BRANCHING GAS SERVICE TO EQUIPMENT. P.C. TO VERIFY GAS LINE SIZE PER VALVE.

KITCHEN EQUIPMENT PLUMBING ROUGH-IN NOTES:

G14 3/4" NPT 100,000 BTU SERVICE: @ (24" A.F.F.) P.C. TO EXTEND TO DOUBLE DECK CONVECTION OVEN MANIFOLD (ITEM #14). THRU F.F.E.C. FURNISHED QUICK DISCONNECT.

G15 3/4" NPT 50,000 BTU SERVICE: @ (24" A.F.F.) P.C. TO EXTEND TO REFRESHMALIZER (ITEM #15). THRU F.F.E.C. FURNISHED QUICK DISCONNECT.

G16 3/4" NPT 52,000 BTU SERVICE: @ (24" A.F.F.) P.C. TO EXTEND TO HOT PLATE (ITEM #16). THRU F.F.E.C. FURNISHED QUICK DISCONNECT.

G30 1-1/4" NPT MANIFOLD 525,000 BTU SERVICE: @ (24" A.F.F.) P.C. TO EXTEND TO FRYER BATTERY (ITEM #30).

G34 3/4" NPT 136,000 BTU SERVICE: @ (24" A.F.F.) P.C. TO EXTEND TO CHARBROILER (ITEM #34). THRU F.F.E.C. FURNISHED QUICK DISCONNECT.

G35 3/4" NPT 100,000 BTU SERVICE: @ (24" A.F.F.) P.C. TO EXTEND TO GRIDDLE (ITEM #36). THRU F.F.E.C. FURNISHED QUICK DISCONNECT.

PS1 1/2" COLD WATER @ (+60" A.F.F.) FOR SODA SYSTEM. ROUGH-IN SHOWN ARE FOR COORDINATION PURPOSES ONLY. THIS ITEM IS TO BE PROVIDED AND INSTALLED BY OTHERS. VERIFY LOCATION WITH PROVIDER.

PS1A FLOOR DRAIN FOR SODA SYSTEM. ROUGH-IN SHOWN ARE FOR COORDINATION PURPOSES ONLY. THIS ITEM IS TO BE PROVIDED AND INSTALLED BY OTHERS. VERIFY LOCATION WITH PROVIDER.

P1 (4 LOCATIONS) 1/2" 120 DEG. HOT AND COLD WATER @ (+18" A.F.F.). P.C. TO EXTEND TO FAUCET MOUNTED ON HAND SINK. (ITEM #1).

P1A (4 LOCATIONS) 1-1/2" WASTE @ (+17" A.F.F.) P.C. TO EXTEND DRAIN FROM HAND SINK. (ITEM #1) TO THIS POINT.

P6 1/2" COLD WATER @ (+66" A.F.F.) P.C. TO EXTEND TO ICE MACHINE (ITEM #6). THRU F.F.E.C. FURNISHED WATER FILTER.

P6A 12" X 12" X 8" DEEP FLOOR SINK WITH HALF GRATE. P.C. TO EXTEND DRAIN LINE FROM ICE BIN (ITEM #6) TO THIS POINT. (SEE GENERAL NOTE 4).

P7 1/2" HOT AND COLD WATER @ (+18" A.F.F.) P.C. TO EXTEND TO FAUCET MOUNTED ON PREP TABLE (ITEM #7).

P7A 12" X 12" X 8" DEEP FLOOR SINK WITH HALF GRATE. P.C. TO MANIFOLD DRAIN LINES FROM 2 COMPARTMENT SINK. (ITEM #7) AND EXTEND TO THIS POINT. (SEE GENERAL NOTE 4).

P11 1/2" HOT AND COLD WATER @ (+36" A.F.F.) P.C. TO EXTEND TO WALL MOUNTED FAUCET FOR MOP SINK. (ITEM #11)

P11A (STUB-UP) 3" WASTE TRAPPED BELOW FLOOR. P.C. TO EXTEND TO DRAIN IN MOP SINK.

P15 1/2" COLD WATER @ (+12" A.F.F.) P.C. TO EXTEND TO REFRESHMALIZER (ITEM #15).

P15A 12" X 12" X 8" DEEP FLOOR SINK WITH HALF GRATE. P.C. TO EXTEND DRAIN LINE FROM REFRESHMALIZER (ITEM #15) TO THIS POINT. (SEE GENERAL NOTE 4).

P42 12" X 12" X 8" DEEP FLOOR SINK WITH HALF GRATE. P.C. TO EXTEND DRAIN LINE FROM HOT FOOD WELL (ITEM #42) TO THIS POINT. (SEE GENERAL NOTE 4).

P56 12" X 12" X 8" DEEP FLOOR SINK WITH HALF GRATE. P.C. TO EXTEND DRAIN LINE FROM ICE CREAM DIPPING CABINET (ITEM #56) TO THIS POINT. (SEE GENERAL NOTE 4).

P68 1/2" COLD WATER @ (+48" A.F.F.) P.C. TO EXTEND TO SODA DISPENSER (ITEM #68). ROUGH-IN SHOWN ARE FOR COORDINATION PURPOSES THIS ITEM IS TO BE PROVIDED AND INSTALL BY OTHERS. VERIFY LOCATION WITH PROVIDER.

P68A 12" X 12" X 8" DEEP FLOOR SINK WITH HALF GRATE. P.C. TO EXTEND DRAIN LINE FROM SODA DISPENSER (ITEM #68) TO THIS POINT. ROUGH-IN SHOWN ARE FOR COORDINATION PURPOSES THIS ITEM IS TO BE PROVIDED AND INSTALL BY OTHERS. VERIFY LOCATION WITH PROVIDER. P.C. TO EXTEND DRAIN LINE FROM TROUGH DRAIN BEVERAGE TABLE (ITEM #65) TO THIS POINT. (SEE GENERAL NOTE 4).

P67 1/2" COLD WATER @ (+48" A.F.F.) P.C. TO EXTEND TO COFFEE BREWER (ITEM #67). ROUGH-IN SHOWN ARE FOR COORDINATION PURPOSES THIS ITEM IS TO BE PROVIDED AND INSTALL BY OTHERS. VERIFY LOCATION WITH PROVIDER.

P73 1/2" HOT AND COLD WATER @ (+12" A.F.F.). P.C. TO EXTEND TO FAUCET MOUNTED ON PREP TABLE SINK. (ITEM #73).

P73A 12" X 12" X 8" DEEP FLOOR SINK WITH HALF GRATE. P.C. TO MANIFOLD (2) DRAIN LINES FROM PREP TABLE SINK. (ITEM #73) AND EXTEND TO THIS POINT. (SEE GENERAL NOTE 4).

P76 1/2" HOT AND COLD WATER @ (+18" A.F.F.) P.C. TO EXTEND TO FAUCET MOUNTED ON SOILED DISHTABLE (ITEM #76).

P76A 12" X 12" X 8" DEEP FLOOR SINK WITH HALF GRATE. P.C. TO EXTEND DRAIN LINE FROM SOILED DISHTABLE (ITEM #76). TO THIS POINT. (SEE GENERAL NOTE 4).

P78 1/2" HOT WATER @ (+50" A.F.F.) P.C. TO EXTEND TO DISHWASHER. (ITEM #20).

P78A 12" X 12" X 8" DEEP FLOOR SINK WITH HALF GRATE. P.C. TO EXTEND DRAIN LINE FROM SOILED DISHTABLE (ITEM #76). P.C. TO EXTEND DRAIN FROM DISHMACHINE (ITEM #78) TO THIS POINT. (SEE GENERAL NOTE 4).

P80 12" X 12" X 8" DEEP FLOOR SINK WITH HALF GRATE. P.C. TO MANIFOLD (3) DRAIN LINES FROM POT AND PAN SINK. (ITEM #80) AND EXTEND TO THIS POINT. (SEE GENERAL NOTE 4).

P81 1/2" HOT AND COLD WATER @ (+12" A.F.F.). P.C. TO EXTEND TO FAUCET MOUNTED ON POT AND PAN SINK. (ITEM #80).

P82 (STUB-UP) 1/2" COLD WATER. P.C. TO EXTEND TO SOAK SINK FAUCET (ITEM #82) MOUNTED ON SOILED DISHTABLE (ITEM #76).

BAR EQUIPMENT PLUMBING ROUGH-IN NOTES:

SL (2 LOCATIONS) (STUB-UP) 6" PVC CHASE FOR SODA LINES. ROUGH-IN SHOWN ARE FOR COORDINATION PURPOSES THIS ITEM IS TO BE PROVIDED AND INSTALL BY OTHERS. VERIFY LOCATION WITH PROVIDER.

BL (STUB-UP) 6" PVC CHASE FOR BEER LINES. ROUGH-IN SHOWN ARE FOR COORDINATION PURPOSES THIS ITEM IS TO BE PROVIDED AND INSTALL BY OTHERS. VERIFY LOCATION WITH PROVIDER.

P81 12" X 12" X 8" DEEP FLOOR SINK WITH HALF GRATE. P.C. TO EXTEND DRAIN LINE FROM PASS-THRU COCKTAIL STATION (ITEM #81) AND UNDERBAR ICE BIN (ITEM #84) TO THIS POINT. (SEE GENERAL NOTE 4).

P82 (2 LOCATIONS) 1/2" 120 DEG. HOT AND COLD WATER @ (+12" A.F.F.) P.C. TO EXTEND TO UNDERBAR HAND SINK. (ITEM #2)

P82A (2 LOCATIONS) 1-1/2" WASTE @ (+10" A.F.F.) P.C. TO EXTEND TO UNDERBAR HAND SINK. (ITEM #2)

P87 12" X 12" X 8" DEEP FLOOR SINK WITH HALF GRATE. P.C. TO EXTEND DRAIN LINE FROM UNDERBAR ICE BIN (ITEM #87) AND DRAIN BOARD (ITEM #82) TO THIS POINT. (SEE GENERAL NOTE 4).

P94 12" X 12" X 8" DEEP FLOOR SINK WITH HALF GRATE. P.C. TO EXTEND DRAIN LINE FROM UNDERBAR ICE BIN (ITEM #94) AND DRAIN BOARD (ITEM #94) TO THIS POINT. (SEE GENERAL NOTE 4).

P813 (2 LOCATIONS) 12" X 12" X 8" DEEP FLOOR SINK WITH HALF GRATE. P.C. TO EXTEND DRAIN LINE FROM BEER TROUGH MOUNTED ON BACK BAR COOLER (ITEM #813) TO THIS POINT. (SEE GENERAL NOTE 4).

P814 1/2" HOT WATER @ (+60" A.F.F.) P.C. TO EXTEND TO GLASS WASHER (ITEM #14). ROUGH-IN SHOWN ARE FOR COORDINATION PURPOSES ONLY. THIS ITEM IS TO BE PROVIDED AND INSTALLED BY OTHERS. VERIFY LOCATION WITH PROVIDER.

P814A 12" X 12" X 8" DEEP FLOOR SINK WITH HALF GRATE. P.C. TO EXTEND DRAIN LINE FROM GLASS WASHER (ITEM #814) TO THIS POINT. (SEE GENERAL NOTE 4). ROUGH-IN SHOWN ARE FOR COORDINATION PURPOSES ONLY. THIS ITEM IS TO BE PROVIDED AND INSTALLED BY OTHERS. VERIFY LOCATION WITH PROVIDER.

GENERAL NOTES

1 ALL ELECTRICAL RECEPTACLES & JUNCTION BOXES SHOWN ARE RATED IN ACCORDANCE WITH EQUIPMENT MANUFACTURER'S SPECIFICATIONS.

2 ELECTRICAL SHOWN IS FOR FOOD SERVICE EQUIPMENT ONLY. ELECTRICAL SERVICE REQUIRED FOR ROOM LIGHTING, CONVENIENCE OUTLETS, & ETC. TO BE ADDITIONAL.

3 P.C. TO INSTALL FAUCETS, VACUUM BREAKERS, SOLENOID VALVES, SPRAY RINSES & DISPOSERS (FURNISHED BY F.F.E.C).

4 P.C. TO FURNISH & INSTALL ALL TAILPIECES, TRAPS, SHUT-OFFS, LOOP VENTS, FLOOR DRAINS & FLOOR SINKS AS REQUIRED.

5 ALL HOT WATER IS 120 DEGREE UNLESS OTHERWISE NOTED.

6 FLOOR DRAINS SHOWN ARE FOR FOOD SERVICE EQUIPMENT ONLY. FLOOR DRAINS REQUIRED FOR GENERAL CLEANING & CODE REQUIREMENTS TO BE ADDITIONAL.

7 THIS DRAWING IS TO BE USED AS A GUIDE FOR FOOD SERVICE EQUIPMENT ELECTRICAL, PLUMBING & VENTILATION SPOT LOCATION. EACH CONTRACTOR SHALL BE RESPONSIBLE FOR HIS/HER WORK TO BE INSTALLED IN ACCORDANCE WITH ALL FEDERAL, STATE & LOCAL CODES.

8 ALL DIMENSIONS ARE FROM FINISHED SURFACES TO CENTER LINE OF SPOT LOCATION UNLESS OTHERWISE NOTED.

9 ALL FOOD SERVICE EQUIPMENT SHALL BE FABRICATED & INSTALLED IN STRICT ACCORDANCE WITH THE NATIONAL SANITATION FOUNDATION (N.S.F.) & IN COMPLIANCE WITH STATE & LOCAL CODES.

10 ALL WALL RECEPTACLES TO BE FLUSH MOUNTED UNLESS OTHERWISE NOTED.

11 ALL FOOD SERVICE EQUIPMENT WITH DIRECT ELECTRICAL CONNECTION MUST BE IN LINE SIGHT OF KITCHEN ELECTRICAL DISTRIBUTION PANEL OR HAVE A FUSED QUICK DISCONNECT FURNISHED & INSTALLED BY E.C. E.C. TO FIELD VERIFY WHERE REQUIRED.

12 ALL SPOT LOCATIONS ARE SHOWN WHERE THEY ARE TO BE LOCATED ON EACH SIDE OF WALL. PRIMARY PLUMBING & ELECTRICAL SERVICE SHOULD BE ROUGHED IN ON CENTER LINE OF WALL.

13 E.C. TO PROVIDE GROUNDING WIRE TO ALL FOOD SERVICE EQUIPMENT IN ADDITION TO THE NUMBER OF WIRES NOTED IN INDIVIDUAL SERVICES.

14 ALL ELECTRICAL AMPERAGE NOTED INDICATES AMP "DRAW" & "NOT" CIRCUIT BREAKER SIZE UNLESS OTHERWISE NOTED. E.C. TO BE RESPONSIBLE FOR PROPER CIRCUIT BREAKER SIZING.

15 E.C. TO FURNISH & INSTALL GROUND FAULT RECEPTACLE OR FURNISH GROUND FAULT CIRCUIT BREAKER FOR ANY RECEPTACLE WITHIN THE KITCHEN.

16 FLOORS IN KITCHEN & SERVING AREAS TO BE "TRANSIT LEVEL". DO NOT SLOPE FLOOR TO FLOOR DRAINS IN THESE AREAS!

17 H.V.A.C. TO COOL, HEAT &/OR VENTILATE FOOD SERVICE DRY STORAGE ROOM TO MAINTAIN A TEMPERATURE OF 65 DEGREES TO 72 DEGREES YEAR AROUND.

18 G.C. TO FURNISH & INSTALL DUCT ENCLOSURE SHAFT AS REQUIRED BY CODE FOR EXHAUST HOOD EXHAUST DUCT.

19 VENTILATION SHOWN IS FOR FOOD SERVICE EQUIPMENT ONLY. H.V.A.C. TO PROVIDE FOR AIR DISTRIBUTION IN FOOD SERVICE AREA AS REQUIRED.

20 G.C. TO FURNISH & INSTALL ALL SLEEVES THRU WALLS AS REQUIRED FOR F.F.E.C. TO RUN REFRIGERATION LINES FROM WALK-IN COOLER/FREEZER COILS TO WALK-IN COOLER/FREEZER COMPRESSORS. SLEEVES TO BE LOCATED IN FIELD BY F.F.E.C. G.C. TO PROVIDE & INSTALL ALL CONCRETE SLABS REQUIRED FOR WALK-IN COOLER/FREEZER COMPRESSORS AS LOCATED BY THE ARCHITECT.

21 E.C. TO EXTEND & PROVIDE ALL FINAL ELECTRICAL HOOK UP & DISCONNECTS & INSTALL LIGHTS IN WALK IN COOLER/FREEZER UNIT. E.C. TO PROVIDE SEAL-OFFS AT EACH CONDUIT ENTRANCE & SEAL WITH SILICONE AT EACH JUNCTION BOX.

22 E.C. TO PROVIDE & INSTALL SHUNT TRIP BREAKERS FOR ALL ELECTRICAL SERVICE TO EQUIPMENT UNDER EXHAUST HOODS.

23 P.C. TO PROVIDE & INSTALL ALL 12" X 12" X 8" FLOOR SINKS WITH HALF GRATE. ALL FLOOR SINKS TO BE MOUNTED ON FLOOR SUCH THAT THE TOP OF THE RIM WILL BE FLUSH WITH FINISHED FLOOR ELEVATION. FLOOR SINKS ALSO TO SERVE AS AREA FLOOR DRAINS.

24 ALL WATER LINES MOUNTED ALONG EXTERIOR WALLS ARE TO STUBBED-UP ALONG THE INTERIOR FACE OF THE WALL TO AVOID POTENTIAL FREEZING UNLESS OTHERWISE NOTED.

IA ARCHITECTURE

SMOKEY BONES
UTICA, MI

STATE OF MICHIGAN
JEFF SPIKES
LICENSE NUMBER 1301069572
ARCHITECT

JEFF SPIKES, ARCHITECT
LICENSE NO. 1301069572

COPYRIGHT
THESE DOCUMENTS ARE PROTECTED BY UNITED STATES COPYRIGHT LAW. THEY HAVE BEEN PREPARED SPECIFICALLY FOR THE PROJECT IDENTIFIED AND ARE NOT SUITABLE FOR USE ON ANY OTHER PROJECT OR AT ANY OTHER LOCATION WITHOUT THE EXPRESS WRITTEN APPROVAL AND PARTICIPATION OF ARCHITECTURE. REPRODUCTION OF THESE DOCUMENTS MUST BE AUTHORIZED BY THE ARCHITECT. ALL RIGHTS ARE RESERVED TO ARCHITECTURE.

BAR
ROUGH-IN
PLAN

REVISIONS	
NO.	DATE

PROJECT NO: IA 2119

SHEET A2.06

DATE 11/12/21

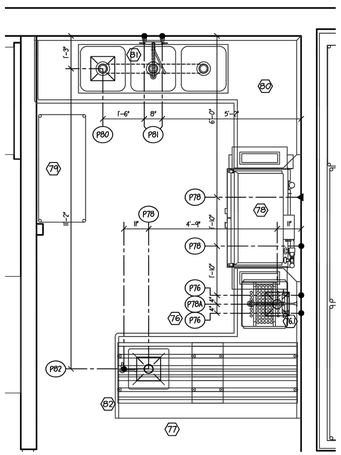

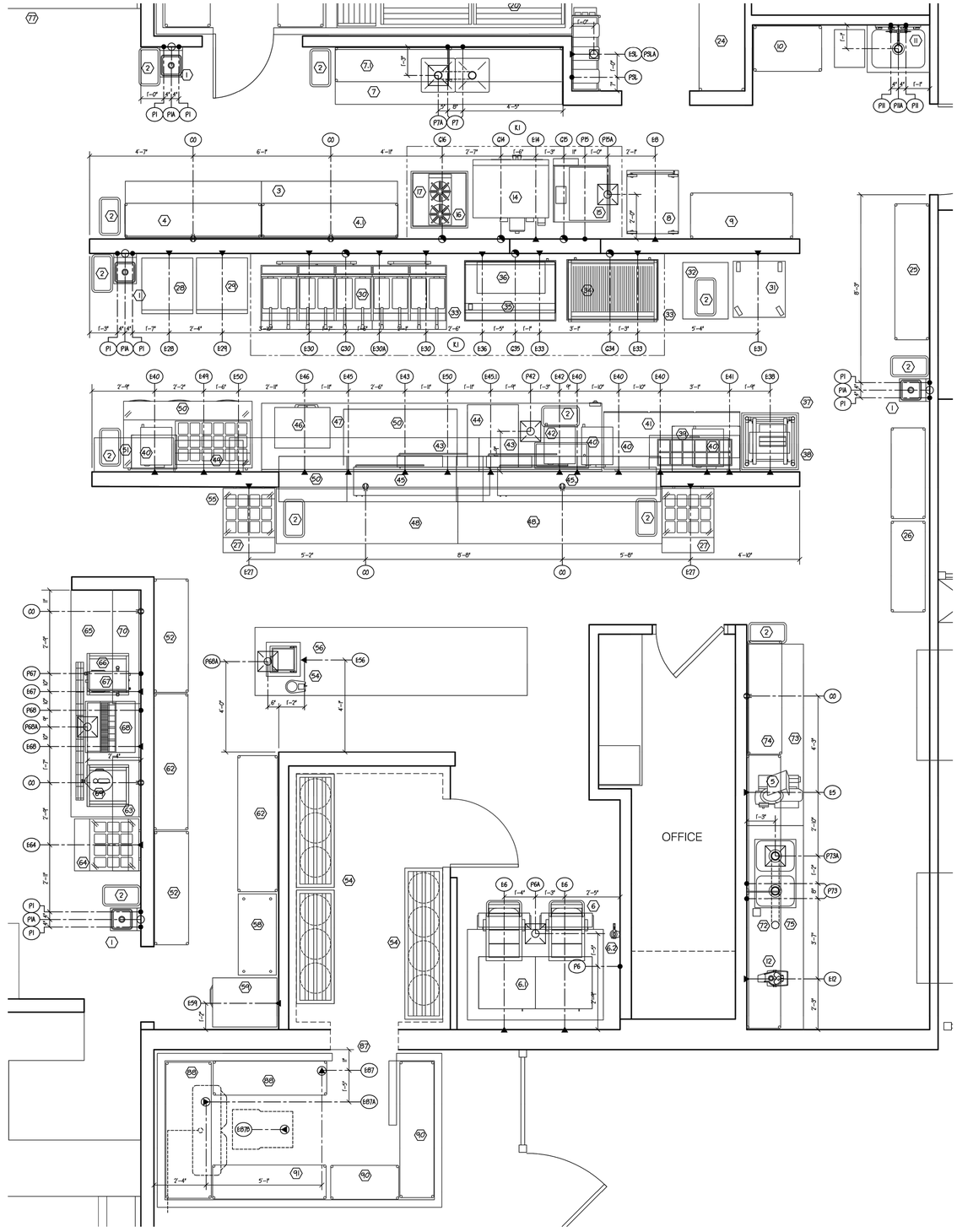

SYMBOL LEGEND

- ELECTRICAL SERVICE
- ELECTRICAL (DROP FROM ABOVE)
- EMERGENCY PULL STATION
- WATER SERVICE
- DIRECT WASTE
- FLOOR DRAIN
- FLOOR SINK
- GAS SERVICE

ABBREVIATIONS

A.F.F.	ABOVE FINISHED FLOOR
D.F.A.	DROP FROM ABOVE
AMPS	AMPERAGE
K.W	KILOWATTS
V	VOLTS
PH	PHASE
H.P.	HORSE POWER
EPS	EMERGENCY PULL STATION
F.F.E.C.	FOODSERVICE FACILITY EQUIPMENT CONTRACTOR
G.C.	GENERAL CONTRACTOR
E.C.	ELECTRICAL CONTRATOR
P.C.	PLUMBING CONTRACTOR
M.C.	MECHANICAL CONTRACTOR

A1 KITCHEN ROUGH-IN PLAN

SCALE: 3/8" = 1'-0"

iA ARCHITECTURE

SMOKEY BONES
UTICA, MI

STATE OF MICHIGAN
JEFF SPIKES
LICENSE NUMBER
1301069572
ARCHITECT

JEFF SPIKES, ARCHITECT
LICENSE NO. 1301069572

COPYRIGHT
THESE DOCUMENTS ARE PROTECTED BY UNITED STATES COPYRIGHT LAW. THEY HAVE BEEN PREPARED SPECIFICALLY FOR THE PROJECT IDENTIFIED AND ARE NOT SUITABLE FOR USE ON ANY OTHER PROJECT OR AT ANY OTHER LOCATION WITHOUT THE EXPRESS WRITTEN APPROVAL AND PARTICIPATION OF iARCHITECTURE. REPRODUCTION OF THESE DOCUMENTS MUST BE AUTHORIZED BY THE ARCHITECT. ALL RIGHTS ARE RESERVED TO iARCHITECTURE.

KITCHEN
ROUGH-IN
PLAN

REVISIONS	
NO.	DATE

PROJECT NO: IA 2119

SHEET A2.07

DATE 11/12/21

DOOR AND STOREFRONT ELEVATIONS

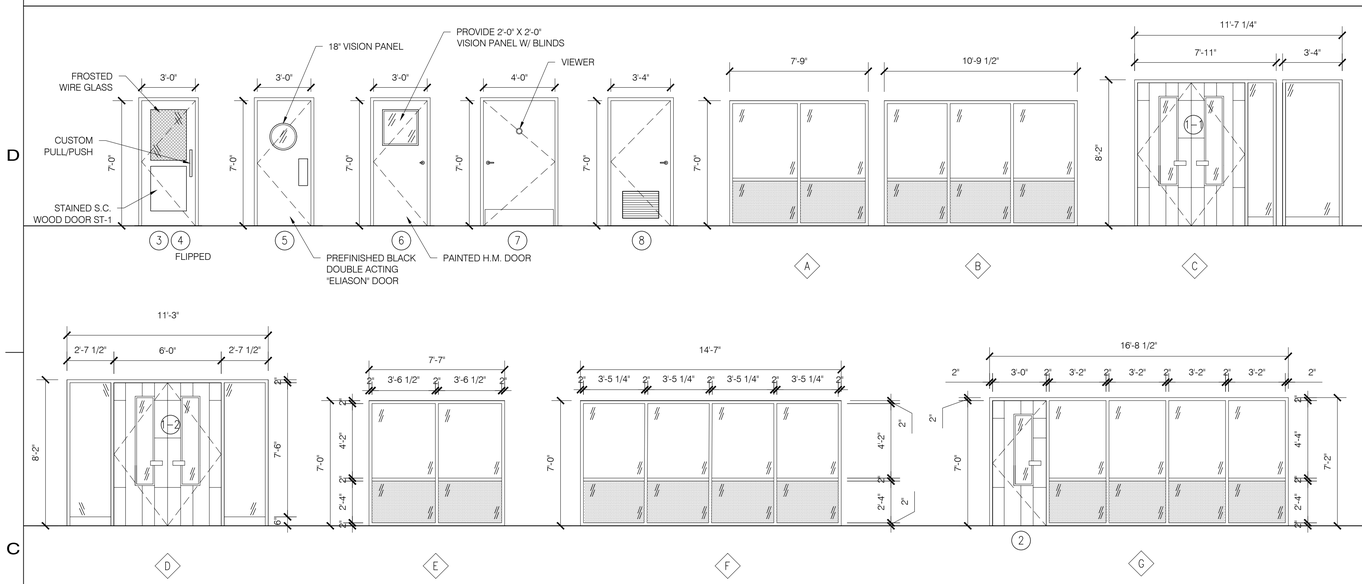

STOREFRONT SCHEDULE

STORE-FRONT OPENING NO. (X)	OPENING SIZE * WIDTH	OPENING SIZE * HEIGHT	WINDOW TYPE	MATERIAL	FINISH	REMARKS (SEE ELEVATIONS)
A	7'-9"	7'-0"	FIXED	ALUM.	PREFINISHED DARK BRONZE	1" TEMPERED, CLEAR GLASS; (2) LAYERS 1/4" CLR. TEMP. GLASS W/ 1/2" AIR SPACE -SEE EXT. ELEVS.
B	10'-9 1/2"	7'-0"	FIXED	ALUM.	PREFINISHED DARK BRONZE	1" TEMPERED, CLEAR GLASS; (2) LAYERS 1/4" CLR. TEMP. GLASS W/ 1/2" AIR SPACE -SEE EXT. ELEVS.
C	11'-7 1/4"	8'-2"	FIXED	ALUM.	PREFINISHED DARK BRONZE	1" TEMPERED, CLEAR GLASS; (2) LAYERS 1/4" CLR. TEMP. GLASS W/ 1/2" AIR SPACE -SEE EXT. ELEVS.
D	11'-3"	8'-2"	FIXED	ALUM.	PREFINISHED DARK BRONZE	1" TEMPERED, CLEAR GLASS; (2) LAYERS 1/4" CLR. TEMP. GLASS W/ 1/2" AIR SPACE -SEE EXT. ELEVS.
E	7'-7"	7'-0"	FIXED	ALUM.	PREFINISHED DARK BRONZE	1" TEMPERED, CLEAR GLASS; (2) LAYERS 1/4" CLR. TEMP. GLASS W/ 1/2" AIR SPACE -SEE EXT. ELEVS.
F	14'-7"	7'-0"	FIXED	ALUM.	PREFINISHED DARK BRONZE	1" TEMPERED, CLEAR GLASS; (2) LAYERS 1/4" CLR. TEMP. GLASS W/ 1/2" AIR SPACE -SEE EXT. ELEVS.

NOTES: ALL EXTERIOR GLAZING SHALL BE 1" CLEAR TEMPERED INSULATED GLASS -PPG SOLARBAN 60 CLEAR GLASS PANELS: (2) LAYERS 1/4" CLEAR TEMPERED GLASS PANELS W/ 1/2" INERT GAS INSULATION GAP (OR EQUIVALENT), SOLAR HEAT GAIN COEFFICIENT: 0.35 MAXIMUM

ALL WINDOWS OTHER THAN THOSE LISTED ABOVE ARE EXISTING. GC TO VERIFY CONDITION.

DOOR SCHEDULE

DOOR NO. (X)	ROOM NAME	WIDTH	HEIGHT	DOOR THICKNESS	DOOR MATERIAL	FRAME MATERIAL	DOOR /FRAME FINISH	FIRE RATING	REMARKS
1-1	VESTIBULE	(2) 3'-0"	8'-0"	2 1/4"	FIBERGLASS	ALUM.	PREFIN./PREFIN. DARK BRONZE	0	CUSTOM
1-2	VESTIBULE	(2) 3'-0"	8'-0"	2 1/4"	FIBERGLASS	ALUM.	PREFIN./PREFIN. DARK BRONZE	0	CUSTOM
2	TO-GO AREA	3'-0"	7'-0"	2 1/4"	FIBERGLASS	ALUM.	PREFIN./PREFIN. DARK BRONZE	0	CUSTOM
3	WOMEN'S	3'-0"	7'-0"	1 3/4"	S.C. WOOD	H.M.	STAIN/PAINT	0	W/ LAMINATED WIRE GLASS UPPER PANEL
4	MEN'S	3'-0"	7'-0"	1 3/4"	S.C. WOOD	H.M.	STAIN/PAINT	0	W/ LAMINATED WIRE GLASS UPPER PANEL
5	BAR EXPO	3'-0"	7'-0"	1"	S.S.	S.S.	PREFIN. BLACK	0	W/ NO STOP FRAME AND 18"ø VISION PANEL
6	OFFICE	3'-0"	7'-0"	1 3/4"	H.M.	H.M.	PAINT/PAINT	0	W/ 2'-0" X 2'-0" VISION PANEL
7	KITCHEN (REAR)	4'-0"	7'-0"	1 3/4"	H.M.	H.M.	PAINT/PAINT	0	W/ FISHEYE VIEWER
8	MECHANICAL/RISER	3'-4"	7'-0"	1 3/4"	H.M.	H.M.	PAINT/PAINT	0	W/ BOTTOM VENT

NOTES #1. ALL HARDWARE & DOORS TO BE FULLY A.D.A. COMPLIANT & OPERATE IN DIRECTION OF EGRESS WITHOUT KEY OR SPECIAL KNOWLEDGE DURING ALL TIMES OF PREMISES OCCUPANCY.
#2. G.C. TO VERIFY ALL DOOR SIZES, SIDELITE & TRANSOM SIZES IN FIELD PRIOR TO ORDERING.
#3. ALL DOORS TO THE OUTSIDE TO BE INSECT/RODENT-PROOF, & THE BUILDING ENVELOPE SHALL BE SEALED PER 2009 ECC, SECTION 502.4.3
#4. ALL GLAZING IN DOORS, SIDELITES, & TRANSOMS SHALL BE TEMPERED.
#5. ALL DOORS OTHER THAN THOSE LISTED IN SCHEDULE ABOVE ARE EXISTING. GC. TO VERIFY CONDITION.
#6. G.C. TO PROVIDE TRIDENT SEC04 WINDOW FILM BY JOHNSON WINDOW FILMS.

HARDWARE SCHEDULE

DOOR NO. (X)	LATCHSET	KEYED DEADBOLT	CLOSER	PUSHPLATE	PULLPLATE	KICKPLATE	SWEEP	THRESHOLD	NOTES	REMARKS
1-1	NONE	●	●	●	●		●	●	#1	PANIC FUNCTION OPERABILITY, INSTALL CUSTOM PUSH/PULL (SUPPLIED BY OWNER)
1-2	NONE	●	●	●	●		●	●	#1	PANIC FUNCTION OPERABILITY, INSTALL CUSTOM PUSH/PULL (SUPPLIED BY OWNER)
2	NONE	●	●	●	●		●	●	#1	PANIC FUNCTION OPERABILITY, INSTALL CUSTOM PUSH/PULL (SUPPLIED BY OWNER)
3	NONE		●	●	●		●	●	#2	INSTALL CUSTOM PUSH/PULL (SUPPLIED BY OWNER)
4	NONE		●	●	●				#2	INSTALL CUSTOM PUSH/PULL (SUPPLIED BY OWNER)
5	NONE									
6	OFFICE		●							
7	NONE	●	●	●	●	●	●	●	#3	PANIC FUNCTION OPERABILITY, INSTALL CUSTOM PUSH/PULL (SUPPLIED BY OWNER)
8	NONE	●	●				●			DETEX ALARM SYSTEM/PANIC FUNCTION HARDWARE

#1. INSTALL PERMANENT PLASTIC WALL PLACARD ADJ. TO DOOR ON INSIDE STATING "THIS DOOR SHALL REMAIN UNLOCKED DURING ALL TIMES OF OCCUPANCY" IN WHITE LETTERS ON BLACK BACKGROUND.
#2. INSTALL PERMANENT A.D.A. COMPLIANT TOILET ROOM PLASTIC PLACARD ON EXT. FACE OF DOOR.
#3. INSTALL ADDRESS NUMERALS IN 4" VINYL LETTERS & "SMOKEY BONES DELIVERIES" IN 2" VINYL LETTERS IN CONTRASTING COLOR TO EXT. FACE OF DOOR.
#4. COLOR: DARK BRONZE
#5. NOT USED

HARDWARE SPECIFICATIONS

ITEM	MANU.	MODEL	REMARK
LOCKSET	SCHLAGE	ND53 RHO 10-025	LEVER TYPE HANDLE, ALL CYLINDERS TO BE INTERCHANGEABLE
PANIC HARDWARE	VON DUPRIN	33A	#06 LEVER ON PULL SIDE
CLOSER	LCN	4111 SPRING CUSH TBMS	--
THRESHOLD	PEMKO	1716	MILL FINISHED ALUM.
DOOR STOPS	HAGER	241F	FLOOR DOME
HINGES	HAGER	BB1279 NRP	4-1/2"x4-1/2" SS HINGES
CUSTOM FIBERGLASS DOOR			
HINGES	JELD-WEN (INCLUDED)	SL26 GEARED CONTINUOUS HINGE	PROVIDED BY DOOR MFR.
DOOR SWEEP	ZERO INTERNATIONAL	477 DOOR SWEEP	(1) PER DOOR LEAF
SILL	PEMKO	1/2"H. 1716 SILL	COLOR: DARK BRONZE
CLOSER	LCN	4010 SURFACE MOUNTED	COLOR: DARK BRONZE
LOCKSET	ADAMS RITE	CYLINDER ESCUTCHEON	--
WEATHERSTRIP	PEMKO	ASTRAGAL	--

NOTES:
#1. ALL HARDWARE FINISH: SATIN
#2. PROVIDE GRADE 1 DOOR HARDWARE
#3. ALL HARDWARE TO BE BLACK.

INTERIOR DOOR HEAD & JAMB DETAILS

SCALE: 3" = 1'-0"

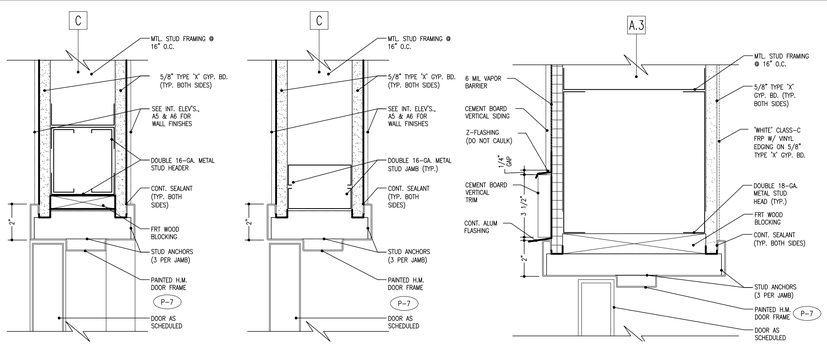

D-H1 - HEAD DETAIL
INTERIOR H.M. FRAME

D-J1 - JAMB DETAIL
INTERIOR H.M. FRAME

D-H2 - HEAD DETAIL
EXTERIOR H.M. FRAME

CUSTOM DOOR PULL DETAILS

SCALE: VARIES

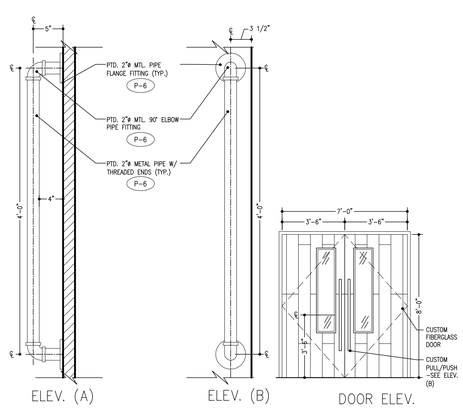

ELEV. (A)
1"=1'-0"

ELEV. (B)
1"=1'-0"

DOOR ELEV.
1/4"=1'-0"

STOREFRONT HEAD & JAMB DETAILS

SCALE: 3" = 1'-0"

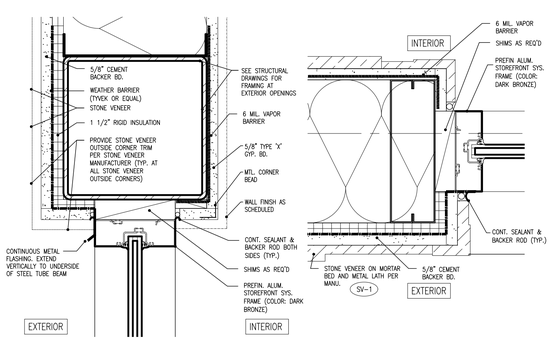

S-H1 - HEAD DETAIL

S-J1 - JAMB DETAIL

IA ARCHITECTURE

SMOKEY BONES
UTICA, MI

STATE OF MICHIGAN
JEFF SPIKES
LICENSE NO. 1301069572
ARCHITECT

JEFF SPIKES, ARCHITECT
LICENSE NO. 1301069572

COPYRIGHT
THESE DOCUMENTS ARE PROTECTED BY UNITED STATES COPYRIGHT LAW. THEY HAVE BEEN PREPARED SPECIFICALLY FOR THE PROJECT IDENTIFIED AND ARE NOT SUITABLE FOR USE ON ANY OTHER PROJECT OR AT ANY OTHER LOCATION WITHOUT THE EXPRESS WRITTEN APPROVAL AND PARTICIPATION OF ARCHITECTURE. REPRODUCTION OF THESE DOCUMENTS MUST BE AUTHORIZED BY THE ARCHITECT. ALL RIGHTS ARE RESERVED TO IARCHITECTURE.

DOOR AND WINDOW SCHEDULES

REVISIONS NO.	DATE

PROJECT NO: IA 2119

SHEET A3.01

DATE 11/12/21

MATERIAL & FINISH SYMBOL LEGEND

P-1 PAINT
MANUFACTURER: SHERWIN WILLIAMS
MODEL #: SW 7017
COLOR: DORIAN GRAY
NOTES:

P-2 PAINT
MANUFACTURER: SHERWIN WILLIAMS
MODEL #: SW 7020
COLOR: BLACK FOX
NOTES:

P-6 PAINT (BAR FOOT RAILS & PIPE DIVIDERS)
MANUFACTURER: RUSTOLEUM
MODEL #: 271473
COLOR: FLAT SOFT IRON

P-7 EXTERIOR PAINT
MANUFACTURER: SHERWIN WILLIAMS
MODEL #: SW 6990
COLOR: CAVIAR
FINISH:

GR-1 GRANITE COUNTER:
MANU.: NORSTONE
MODEL#: UBATUBA
FINISH: LEATHERED

GR-2 QUARTZ LAVATORY COUNTERTOP
MANUFACTURER: MSI
COLOR: FROST WHITE QUARTZ
REMARKS: 2 CM THICKNESS

QT-1 DECORATIVE FLOORING SYSTEM
MANUFACTURER: SILIKAL AMERICA
MODEL #: 61 CQ
COLOR: COLOR QUARTZ
TYPE: ABRASIVE AT WALKWAYS, SMOOTH UNDER EQUIPMENT
ACCESSORIES: COVE BASE AND ALL TRIMS AS REQ'D.
FINISH: APPLY PER MANUFACTURER'S RECOMMENDATIONS.

QT-2 DECORATIVE FLOORING SYSTEM
MANUFACTURER: SILIKAL AMERICA
MODEL #: NATURALS
COLOR: NATURALS STONE
TYPE: ABRASIVE AT WALKWAYS, SMOOTH UNDER EQUIPMENT
ACCESSORIES: COVE BASE AND ALL TRIMS AS REQ'D.
FINISH: APPLY PER MANUFACTURER'S RECOMMENDATIONS.

FT-1 PORCELAIN TILE & BORDER 8"x48"
MANUFACTURER: DALTILE
MODEL #: TRANSIO TRIUMPH TN11
CONTACT: WWW.DALTILE.COM
GROUT: DARK GROUT TO MATCH

B-1 PORCELAIN BASE 6"x12"
MANUFACTURER: DALTILE
MODEL #: PLAZA NOVA BROWN VISION
CONTACT: WWW.DALTILE.COM
GROUT: DARK GROUT TO MATCH

WT-1 CERAMIC TILE
MANUFACTURER: DALTILE
MODEL #: ANNAPOLIS
COLOR: SAIL

BV-1 BRICK VENEER
MANUFACTURER: REPLICATIONS UNLIMITED
MODEL #: URESTONE, ST. LOUIS BRICK
COLOR: ADOBE

BV-2 BRICK VENEER
MANUFACTURER: REPLICATIONS UNLIMITED
MODEL #: URESTONE, ST. LOUIS BRICK
COLOR: PAINTED WHITE

WC-1 VINYL WALL COVERING
MANUFACTURER: KOROSEAL
MODEL #: HERITAGE WOOD, HW29-60
COLOR: ALDER
REMARKS: REPEAT: V:35.5"

SV-1 NATURAL STONE VENEER
MANUFACTURER: BORAL VERSETTA STONE
MODEL #: LEDGESTONE SERIES
COLOR: PLUM CREEK

SV-2 LIMESTONE ACCENT BAND
MANUFACTURER: TBD
MODEL #: TBD
COLOR: MATCH SV-1
REMARKS: EXTERIOR SMOOTH LIMESTONE ACCENT BAND, SUBMIT SAMPLES FOR APPROVAL

MB-1 METAL BANDING 3"xXX" (BAR DIE-WALL)
MANUFACTURER: TBD
MODEL #: TBD
COLOR: TBD

ST-1 WOOD STAIN
MANUFACTURER: MINWAX
MODEL #: MW2716 DARK WALNUT
FINISH: SEMI-GLOSS POLY. MINIMUM THREE COATS, SAND WITH 220 GRIT BETWEEN 1ST AND 2ND COAT, SAND WITH 400 GRIT BETWEEN 2ND AND 3RD COATS. WIPE DOWN AFTER EACH SANDING WITH PAINTER'S RAG DIPPED IN MINERAL SPIRITS. WAIT UNTIL MINERAL SPIRITS FLASHES OFF (DRIES) BEFORE RECOATING.

BV-1 BRICK VENEER
MANUFACTURER: REPLICATIONS UNLIMITED
MODEL #: URESTONE, ST. LOUIS BRICK
COLOR: ADOBE

BV-2 BRICK VENEER
MANUFACTURER: REPLICATIONS UNLIMITED
MODEL #: URESTONE, ST. LOUIS BRICK
COLOR: PAINTED WHITE

CG-1 CORRUGATED PANEL
MANUFACTURER: TBD
SIZE #: 3/4" CORRUGATED METAL PANEL
COLOR: GALVANIZED
NOTES: HORIZONTAL AT WAINSCOTS
VERTICAL AT "MASTERS OF MEAT"

PK-1 BURNISHED WOOD
MANUFACTURER: TBD
SIZE: 1"x6" PINE PLANKS
FINISH: TORCH BURNISHED TO DARK FINISH, THEN APPLY MATTE EPOXY

FRP-1 FRP PANELS
MANUFACTURER: TBD
SIZE: 4'x10' PANELS
FINISH: MATCH EXISTING

MP-1 EXTERIOR MEGA-RIB PANELS
MANUFACTURER: MCELROY METAL
MODEL: MSR PANEL
FINISH: MANSARD BROWN

CP-1 2'X2' APPLIED CEILING PANEL
MANUFACTURER: ARMSTRONG OR APPROVED EQUAL
MODEL #: FINE FISSURED 1732 ANGLED TEGULAR 15/16" W, 24"x24"x5/8"
COLOR: MEDIUM TAUPE
GRID: PRELUDE ML 15/16" EXPOSED TEE
COLOR: MEDIUM TAUPE OR SIMILAR TO MATCH TILES

CP-2 2'X4' VINYL FACED CEILING TILES
MANUFACTURER: USG SHEETROCK BRAND
MODEL #: VINYLROCK X #1142
COLOR: WHITE

MR-1 METAL ROOFING
MANUFACTURER: PAC-CLAD
MODEL #: 22 GAUGE 16" UL-90
COLOR: BLACK ALUMINUM
FINISH: SMOOTH PANELS

A1 FLOOR PLAN
SCALE: 3/32" = 1'-0"

iARCHITECTURE

SMOKEY BONES
UTICA, MI

STATE OF MICHIGAN
JEFF SPIKES
LICENSE NUMBER
1301069572
ARCHITECT

JEFF SPIKES, ARCHITECT
LICENSE NO. 1301069572

COPYRIGHT
THESE DOCUMENTS ARE PROTECTED BY UNITED STATES COPYRIGHT LAW. THEY HAVE BEEN PREPARED SPECIFICALLY FOR THE PROJECT IDENTIFIED AND ARE NOT SUITABLE FOR USE ON ANY OTHER PROJECT OR AT ANY OTHER LOCATION WITHOUT THE EXPRESS WRITTEN APPROVAL AND PARTICIPATION OF iARCHITECTURE. REPRODUCTION OF THESE DOCUMENTS MUST BE AUTHORIZED BY THE ARCHITECT. ALL RIGHTS ARE RESERVED TO iARCHITECTURE.

FINISH SCHEDULE

REVISIONS	
NO.	DATE
1	1.27.2022

PROJECT NO: IA 2119

SHEET A3.02

DATE 11/12/21

KEYNOTES

1. ACCESSIBLE ALUMINUM THRESHOLD (CLEAR ANODIZED) –WHEN AVAILABLE, COORDINATE INSTALLATION W/ STOREFRONT/DOOR
2. PROVIDE SLIP SHEET UNDER THE LOCATIONS @ CONTROL JOINTS (TYP.)
3. NOT USED
4. TYP. BAR DIE WALL CONSTRUCTION –SEE A.901 (TYP.)
5. METAL FOOT REST –SEE A.901 (TYP.)
6. EXISTING SEALED CONCRETE FLOOR

FLOOR FINISH PLAN NOTES

1. AT ALL FLOOR TRANSITIONS PROVIDE ACCESSIBLE TRANSITION.
2. ALL FINISHES INSTALLED SHALL BE CLASSIFIED AS "SLIP RESISTANT" WITH A STATIC COEFFICIENT OF FRICTION OF 0.6 OR GREATER UNDER ASTM D2047. G.C. TO PROVIDE ARCHITECT/OWNER WITH DOCUMENTATION PRIOR TO INSTALLATION.

FLOOR FINISH SCHEDULE

QT–1
DECORATIVE FLOORING SYSTEM
MANUFACTURER: SILIKAL AMERICA
MODEL #: K1 CQ
COLOR: COLOR QUARTZ
TYPE: ABRASIVE AT WALKWAYS, SMOOTH UNDER EQUIPMENT
ACCESSORIES: COVE BASE AND ALL TRIMS AS REQ'D.
FINISH: APPLY PER MANUFACTURER'S RECOMMENDATIONS.

QT–2
DECORATIVE FLOORING SYSTEM
MANUFACTURER: SILIKAL AMERICA
MODEL #: NATURALS
COLOR: NATURALS STONE
TYPE: ABRASIVE AT WALKWAYS, SMOOTH UNDER EQUIPMENT
ACCESSORIES: COVE BASE AND ALL TRIMS AS REQ'D.
FINISH: APPLY PER MANUFACTURER'S RECOMMENDATIONS.

FT–1
PORCELAIN TILE & BORDER 8"x48"
MANUFACTURER: DALTILE
MODEL #: TRANSIO TRUMPH TN11
CONTACT: WWW.DALTILE.COM
GROUT: DARK GROUT TO MATCH

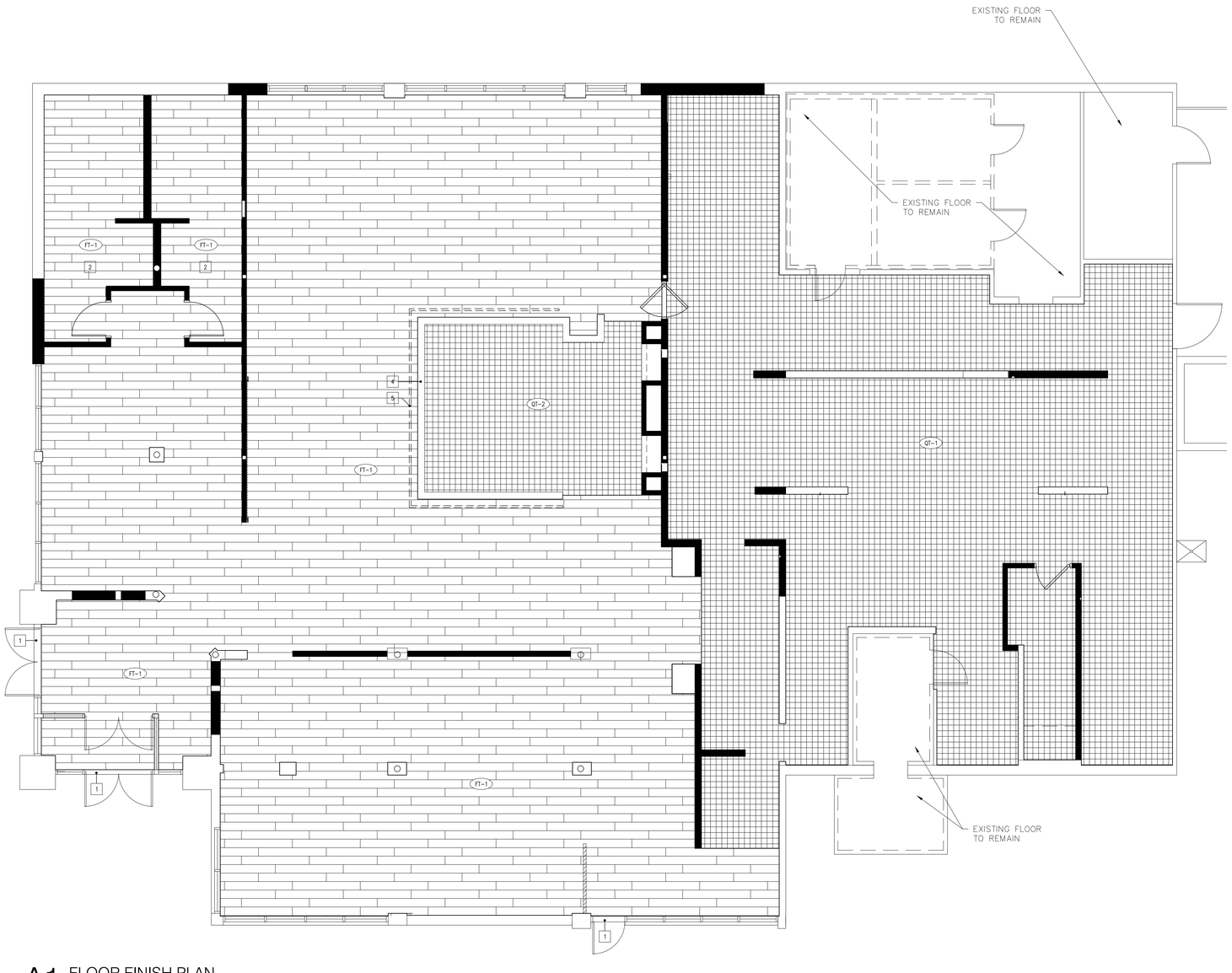

A1 FLOOR FINISH PLAN
SCALE: 3/16" = 1'-0"

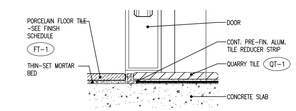

A504 TILE TRANSITION

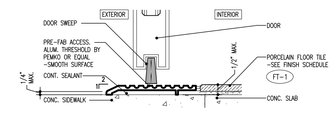

A503 THRESHOLD

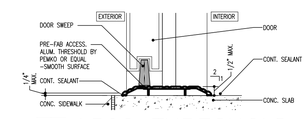

A502 THRESHOLD
SCALE: 3" = 1'-0"

0 0.25 0.5

NOTE:
ALL THRESHOLDS TO COMPLY WITH 2010 ADA

IA ARCHITECTURE

SMOKEY BONES
UTICA, MI

STATE OF MICHIGAN
JEFF SPIKES
NUMBER
1301069572
ARCHITECT

JEFF SPIKES, ARCHITECT
LICENSE NO. 1301069572

COPYRIGHT
THESE DOCUMENTS ARE PROTECTED BY UNITED STATES COPYRIGHT LAW. THEY HAVE BEEN PREPARED SPECIFICALLY FOR THE PROJECT IDENTIFIED AND ARE NOT SUITABLE FOR USE ON ANY OTHER PROJECT OR AT ANY OTHER LOCATION WITHOUT THE EXPRESS WRITTEN APPROVAL AND PARTICIPATION OF IARCHITECTURE. REPRODUCTION OF THESE DOCUMENTS MUST BE AUTHORIZED BY THE ARCHITECT. ALL RIGHTS ARE RESERVED TO IARCHITECTURE.

FLOOR FINISH PLAN

REVISIONS	
NO.	DATE
1	1.27.2022

PROJECT NO: IA 2119

SHEET A3.03

DATE 11/12/21

ELEVATION DEMO NOTES

1. REMOVE ALL EXISTING EXTERIOR FINISHES DOWN TO SHEATHING TO ALLOW FOR INSTALLATION OF NEW FINISHES (SEE EXTERIOR ELEVATIONS)
2. REMOVE EXISTING EXTERIOR PYLON COLUMNS TO FLUSH WITH EXTERIOR WALL.
3. REMOVE EXISTING STOREFRONT WINDOWS AND DOORS IN ORDER TO ALLOW FOR INSTALLATION OF NEW STOREFRONT (UNLESS OTHERWISE NOTED).

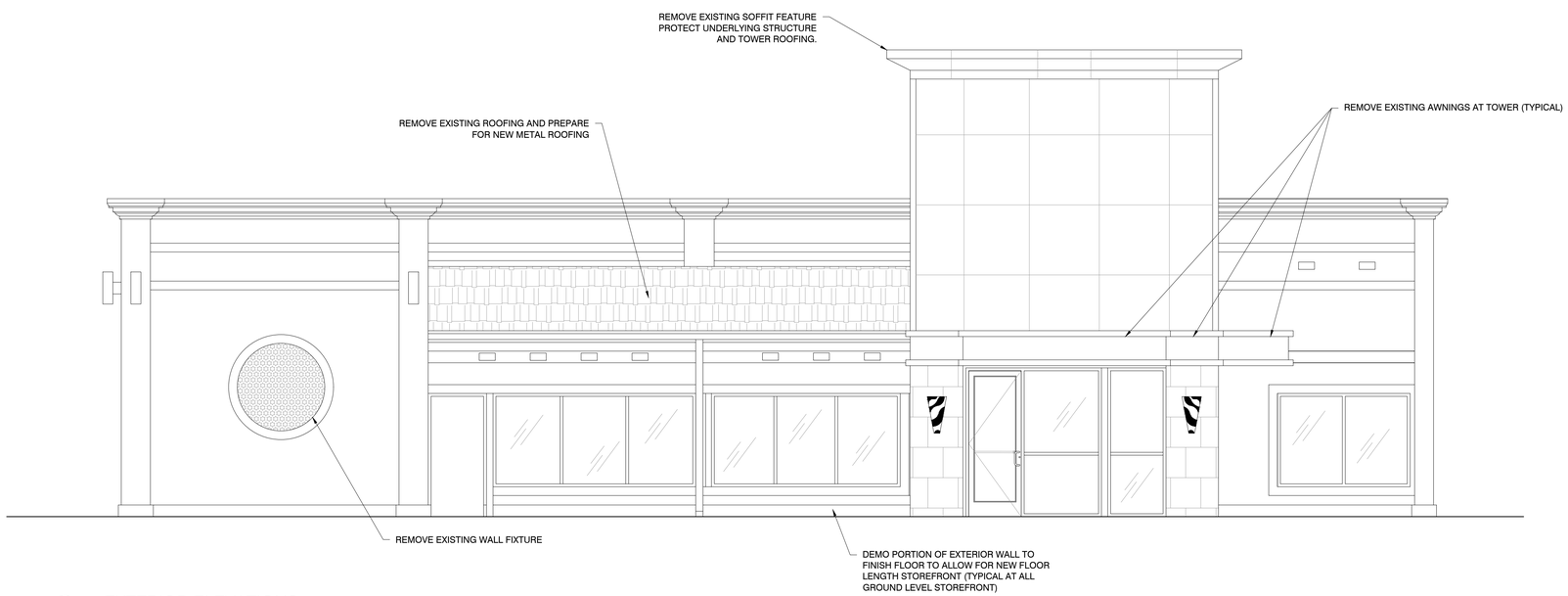

C1 EXTERIOR ELEVATIONS

SCALE: 1/4" = 1'-0"

A1 EXTERIOR ELEVATIONS

SCALE: 1/4" = 1'-0"

iA ARCHITECTURE

SMOKEY BONES
UTICA, MI

JEFF SPIKES, ARCHITECT
LICENSE NO. 1301069572

COPYRIGHT
THESE DOCUMENTS ARE PROTECTED BY UNITED STATES COPYRIGHT LAW. THEY HAVE BEEN PREPARED SPECIFICALLY FOR THE PROJECT IDENTIFIED AND ARE NOT SUITABLE FOR USE ON ANY OTHER PROJECT OR AT ANY OTHER LOCATION WITHOUT THE EXPRESS WRITTEN APPROVAL AND PARTICIPATION OF iARCHITECTURE. REPRODUCTION OF THESE DOCUMENTS MUST BE AUTHORIZED BY THE ARCHITECT. ALL RIGHTS ARE RESERVED TO iARCHITECTURE.

EXISTING EXTERIOR ELEVATIONS

REVISIONS	
NO.	DATE

PROJECT NO: IA 2119

SHEET A4.00

DATE 11/12/21

ELEVATION DEMO NOTES

1. REMOVE ALL EXISTING EXTERIOR FINISHES DOWN TO SHEATHING TO ALLOW FOR INSTALLATION OF NEW FINISHES (SEE EXTERIOR ELEVATIONS)
2. REMOVE EXISTING EXTERIOR PYLON COLUMNS TO FLUSH WITH EXTERIOR WALL.
3. REMOVE EXISTING STOREFRONT WINDOWS AND DOORS IN ORDER TO ALLOW FOR INSTALLATION OF NEW STOREFRONT (UNLESS OTHERWISE NOTED).

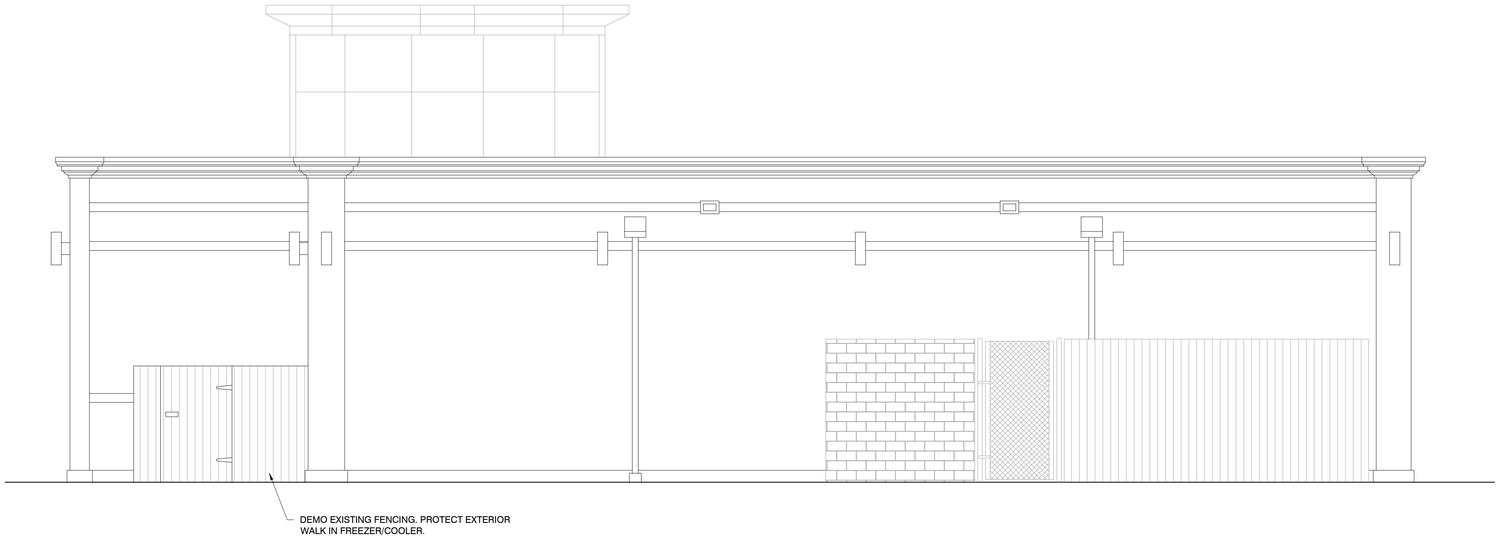

C1 EXTERIOR ELEVATIONS

SCALE: 1/4" = 1'-0"

A1 EXTERIOR ELEVATIONS

SCALE: 1/4" = 1'-0"

iA ARCHITECTURE

SMOKEY BONES
UTICA, MI

STATE OF MICHIGAN
JEFF SPIKES
LICENSE NUMBER
1301069572
ARCHITECT

JEFF SPIKES, ARCHITECT
LICENSE NO. 1301069572

COPYRIGHT
THESE DOCUMENTS ARE PROTECTED BY UNITED STATES COPYRIGHT LAW. THEY HAVE BEEN PREPARED SPECIFICALLY FOR THE PROJECT IDENTIFIED AND ARE NOT SUITABLE FOR USE ON ANY OTHER PROJECT OR AT ANY OTHER LOCATION WITHOUT THE EXPRESS WRITTEN APPROVAL AND PARTICIPATION OF iARCHITECTURE. REPRODUCTION OF THESE DOCUMENTS MUST BE AUTHORIZED BY THE ARCHITECT. ALL RIGHTS ARE RESERVED TO iARCHITECTURE.

EXTERIOR ELEVATIONS

REVISIONS	
NO.	DATE

PROJECT NO: IA 2119

SHEET A4.01

DATE 11/12/21

ALUMINUM STOREFRONT SYSTEM:
KAWNEER 450 PRE-FINISHED ALUMINUM FRAMES (COLOR: DARK BRONZE) W/ 1" CLEAR TEMPERED INSULATED GLASS PANELS

GLAZING:
PPG SOLARBAN 60 CLEAR (2) LAYERS 1/4" GLASS PANES W/ 1/2" INERT GAS INSULATION GAP (SOLAR HEAT GAIN COEFFICIENT: 0.25 MAXIMUM)

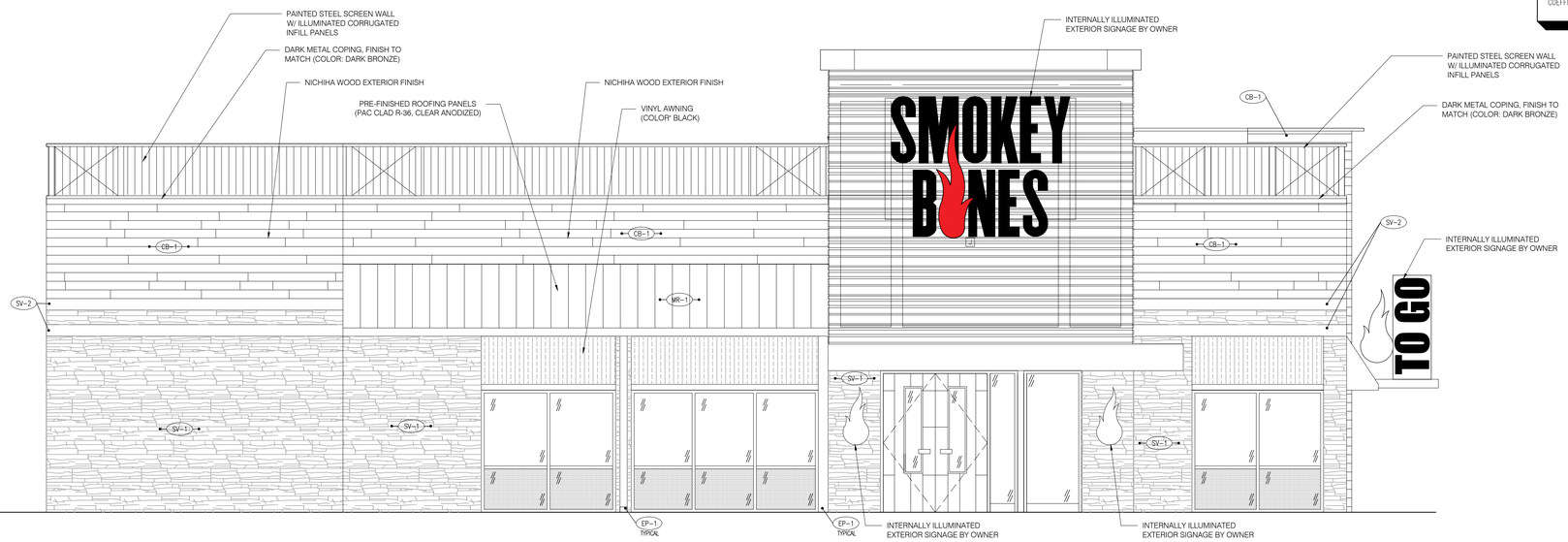

C1 EXTERIOR ELEVATIONS
SCALE: 1/4" = 1'-0"

EXTERIOR ELEVATIONS SIGNAGE NOTES

1. ALL EXTERIOR SIGNAGE IS DESIGN/PERMIT/BUILD BY OTHERS AND SHOWN FOR REFERENCE PURPOSES ONLY.
2. G.C. SHALL PROVIDE WALL-MOUNTED EXTERIOR J-BOX AND WIRING AS REQUIRED BY SIGNAGE. ALL SIGNAGE ELECTRICAL BY G.C. SHALL BE COORDINATED WITH OWNER'S SIGNAGE VENDOR AND SHALL BE COMPLETELY CONCEALED ONCE SIGNAGE IS INSTALLED.
3. G.C. SHALL COORDINATE AND PROVIDE SUPPORT AND BLOCKING AS REQUIRED FOR SIGNAGE SUPPORT.

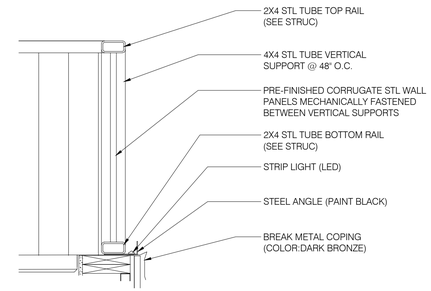

C5 PAINTED/ILLUMINATED SCREEN WALL DETAIL
SCALE: 1" = 1'-0"

NOTE: PAINTED STEEL SCREENWALL W/ ILLUMINATED CORRUGATED INFILL PANELS TO BE SUPPLIED AND INSTALLED BY SIGNAGE VENDOR.

EXTERIOR ELEVATION KEYNOTES

SV-1 NATURAL STONE VENEER
MANUFACTURER: BORAL VERSETTA STONE
MODEL #: LEDGESTONE SERIES
COLOR: PLUM CREEK(CONFIRM W/ OWNER PRIOR TO BID AND PURCHASE OF MATERIALS)

SV-2 LIMESTONE ACCENT BAND
MANUFACTURER: TBD
MODEL #: TBD
COLOR: MATCH SV-1
REMARKS: EXTERIOR SMOOTH LIMESTONE ACCENT BAND, SUBMIT SAMPLES FOR APPROVAL

CB-1 EXTERIOR WOOD DECKING
MANUFACTURER: NICHIHA
MODEL #: VINTAGEWOOD
COLOR: CEDAR (CONFIRM W/ OWNER PRIOR TO BID AND PURCHASE OF MATERIALS)

EP-1 EXTERIOR PAINT
MANUFACTURER: BENJAMIN MOORE
MODEL #: HC-64
COLOR: TOWNSEND HARBOR BROWN
FINISH:

MP-1 EXTERIOR MEGA-RIB PANELS
MANUFACTURER: MCELROY METAL
MODEL: MSR PANEL
FINISH: MANSARD BROWN

MR-1 METAL ROOFING
MANUFACTURER: PAC-CLAD
MODEL #: 22 GAUGE 16" UL-90
COLOR: BLACK ALUMINUM
FINISH: SMOOTH PANELS

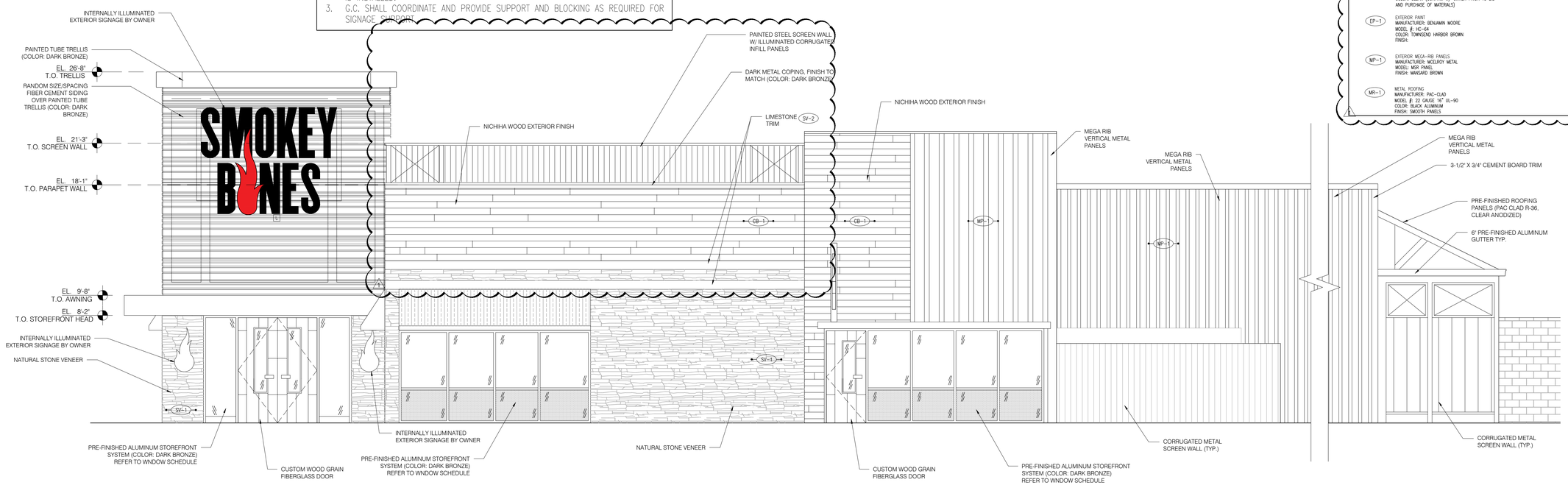

A1 EXTERIOR ELEVATIONS
SCALE: 1/4" = 1'-0"

iA ARCHITECTURE

SMOKEY BONES
UTICA, MI

STATE OF MICHIGAN
JEFF SPIKES
LICENSE NO. 1301069572
ARCHITECT

JEFF SPIKES, ARCHITECT
LICENSE NO. 1301069572

COPYRIGHT
THESE DOCUMENTS ARE PROTECTED BY UNITED STATES COPYRIGHT LAW. THEY HAVE BEEN PREPARED SPECIFICALLY FOR THE PROJECT IDENTIFIED AND ARE NOT SUITABLE FOR USE ON ANY OTHER PROJECT OR AT ANY OTHER LOCATION WITHOUT THE EXPRESS WRITTEN APPROVAL AND PARTICIPATION OF iARCHITECTURE. REPRODUCTION OF THESE DOCUMENTS MUST BE AUTHORIZED BY THE ARCHITECT. ALL RIGHTS ARE RESERVED TO iARCHITECTURE.

EXTERIOR ELEVATIONS

REVISIONS	
NO.	DATE
1	1.27.2022

PROJECT NO: IA 2119

SHEET A4.02

DATE 11/12/21

EXTERIOR ELEVATIONS SIGNAGE NOTES

1. ALL EXTERIOR SIGNAGE IS DESIGN/PERMIT/BUILD BY OTHERS AND SHOWN FOR REFERENCE PURPOSES ONLY.
2. G.C. SHALL PROVIDE WALL-MOUNTED EXTERIOR J-BOX AND WIRING AS REQUIRED BY SIGNAGE. ALL SIGNAGE ELECTRICAL BY G.C. SHALL BE COORDINATED WITH OWNER'S SIGNAGE VENDOR AND SHALL BE COMPLETELY CONCEALED ONCE SIGNAGE IS INSTALLED.
3. G.C. SHALL COORDINATE AND PROVIDE SUPPORT AND BLOCKING AS REQUIRED FOR SIGNAGE SUPPORT.

EXTERIOR ELEVATION KEYNOTES

SV-1 NATURAL STONE VENEER
MANUFACTURER: BORAL VERSETTA STONE
MODEL #: LEDGESTONE SERIES
COLOR: PLUM CREEK(CONFIRM W/ OWNER PRIOR TO BID AND PURCHASE OF MATERIALS)

SV-2 LIMESTONE ACCENT BAND
MANUFACTURER: TBD
MODEL #: TBD
COLOR: MATCH SV-1
REMARKS: EXTERIOR SMOOTH LIMESTONE ACCENT BAND, SUBMIT SAMPLES FOR APPROVAL

CB-1 EXTERIOR WOOD DECKING
MANUFACTURER: NICHIHA
MODEL #: VINTAGEWOOD
COLOR: CEDAR (CONFIRM W/ OWNER PRIOR TO BID AND PURCHASE OF MATERIALS)

EP-1 EXTERIOR PAINT
MANUFACTURER: BENJAMIN MOORE
MODEL #: HC-64
COLOR: TOWNSEND HARBOR BROWN
FINISH:

MP-1 EXTERIOR MEGA-RIB PANELS
MANUFACTURER: MCELROY METAL
MODEL: MSR PANEL
FINISH: MANSARD BROWN

MR-1 METAL ROOFING
MANUFACTURER: PAC-CLAD
MODEL #: 22 GAUGE 16" UL-90
COLOR: BLACK ALUMINUM
FINISH: SMOOTH PANELS

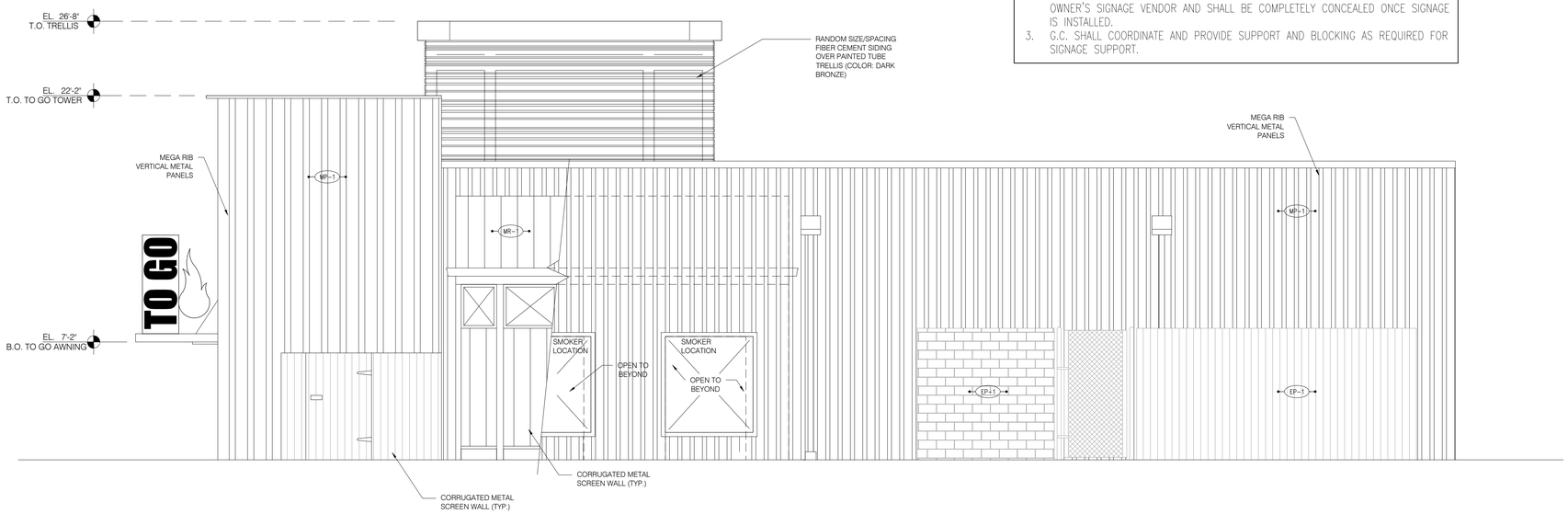

C1 EXTERIOR ELEVATIONS
SCALE: 1/4" = 1'-0"

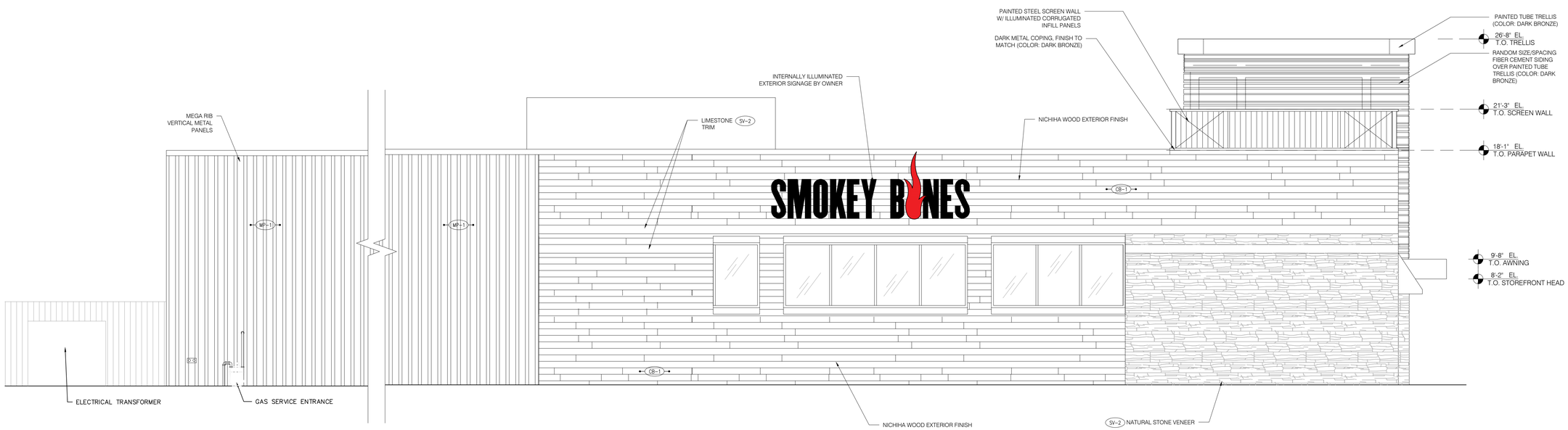

A1 EXTERIOR ELEVATIONS
SCALE: 1/4" = 1'-0"

iA ARCHITECTURE

SMOKEY BONES
UTICA, MI

STATE OF MICHIGAN
JEFF SPIKES
LICENSE NUMBER
1301069572
ARCHITECT

JEFF SPIKES, ARCHITECT
LICENSE NO. 1301069572

COPYRIGHT
THESE DOCUMENTS ARE PROTECTED BY UNITED STATES COPYRIGHT LAW. THEY HAVE BEEN PREPARED SPECIFICALLY FOR THE PROJECT IDENTIFIED AND ARE NOT SUITABLE FOR USE ON ANY OTHER PROJECT OR AT ANY OTHER LOCATION WITHOUT THE EXPRESS WRITTEN APPROVAL AND PARTICIPATION OF iARCHITECTURE. REPRODUCTION OF THESE DOCUMENTS MUST BE AUTHORIZED BY THE ARCHITECT. ALL RIGHTS ARE RESERVED TO iARCHITECTURE.

EXTERIOR ELEVATIONS

REVISIONS	
NO.	DATE
1	1.27.2022

PROJECT NO: IA 2119

SHEET A4.03

DATE 11/12/21

Smokey Bones Responsibility Matrix

Equipment Type	Purchased By/ Installed By
Standard GC Provided Items	
Building	Contractor
Site Work	Contractor
Exterior wood, metal, steel, Rainscreen & Frame	Contractor
Decorative Metal Work	Contractor
Thin Brick	Contractor
HVAC (RTU's) & Hoods	
MUAs, Exhaust Fans & Hoods	Owner buy, Vendor install
RTUs	Owner buy, Vendor install
Test & Balance Report	Owner buy, Vendor install
Kitchen Equipment	
Food Service & Cooking Equipment Delivery	Owner buy, Vendor install
Kitchen Equipment/Refrigeration Install	Owner buy, KE vendor install
Walk-in cooler and freezers	Owner buy, Vendor install
Beer Chiller	Owner buy, Vendor install
Beer System	Owner buy, Vendor install
Stainless steel pass through counter and associated trim	Owner buy, Vendor install
Smokers	Owner buy, Vendor install
Dishmachine	Owner buy, Eco install
Coffee and tea equipment	Owner buy, Owner install
Electrical - (Light Fixtures) Interior/ Exterior	
Switchgear	GC buy, GC install
Interior/Exterior Lighting Package	Owner buy, GC install
Flame light Sconce fixture	Owner buy, GC install
IT-MIS POS SYSTEMS |	
POS (low voltage)	Owner buy, Owner install
POS (equipment)	Owner buy, Owner install
Tel/Data (low voltage wiring)	Owner buy, Owner install
Tel/Data (equipment)	Owner buy, Owner install
Prefab POS Station	Owner buy, GC Install
Seating & Décor Package	
Interior Movable & Fixed Seating	Owner buy, KE vendor install
Bar: Counter, rail, hooks, covering, etc.	GC buy, GC install
Exterior Patio Furniture	Owner buy, GC install
Wood window shades	Owner buy, GC install
Wall covering: wainscot, faux brick, tile, corrugated metal, etc.	GC buy, GC install
Graphics	Owner buy, GC install
Galvanized Piping accents	GC buy, GC install
Wood Tile	GC purchases and installs.
Artwork (framed & ready to hang)	Owner buy, Vendor install
Fire Pit & Railing	
Patio Gas Fire Pit Feature	Owner buy, GC install
Exterior railing + wood inserts	Owner buy, GC install
Other Equipment & Packages	
Security system, Cabling and Cameras	Owner buy, Vendor install
Security System, CCTV Monitoring	Owner set-up
Audio/Visual, TV's, Cabling & Equipment	Owner buy, Vendor install
Direct TV	Owner buy, Sarellite City Install
DMX Box	Owner buy, Satellite City Install
Bulk CO2/Soda System	Owner buy, Vendor install
Beverage Units	Lease, Bottler install
Beverage Units - Installation	Bottler Install
Safe	Owner buy, Vendor install
~~Rolling Ladder (Liquor)~~	~~Owner buy, GC install~~
Sign Package	
Awnings	Owner buy, Vendor install
Signage Exterior/Interior	Owner buy, Vendor install
Window graphics-film	Owner buy, Vendor install
Hours of Operation	Owner buy, Vendor install
Walk-off mat	Owner buy, GC Install
SMOKEY BONES COORDINATES ALL ITEMS BELOW THIS LINE	
Smallwares	
Smallwares	Owner buy, Vendor Delivery, Ops Install
Utilities - Accounts Set-up by Construction/Development Dept.	
Natural Gas	Owner Coordinates
Power	Owner Coordinates
Telephone Service	Owner Coordinates
Water service	Owner Coordinates
Grease Container (Cooking Oil)	Owner Coordinates
Trash/Waste & Recycle Dumpsters	Owner Coordinates
Miscellaneous Items to Order (No Cost)	
Kitchen Equipment Start-up	Owner buy, KE vendor install
Paper Towel & Toilet Dispensers	Owner buy, GC install
Chemical Dispensers	Owner buy, Vendor install
Water Softener and Filter Systems	Owner buy, GC install
Soap Dispensers (Kitchen & Restrooms)	Owner buy, GC install
Pre-Opening Order | MBM	Owner Buy
Linen Container	Owner Coordinate
Pest Control	Owner Coordinate

iA ARCHITECTURE

SMOKEY BONES
UTICA, MI

STATE OF MICHIGAN
JEFF SPIKES
LICENSE NUMBER
1301069572
ARCHITECT

JEFF SPIKES, ARCHITECT
LICENSE NO. 1301069572

COPYRIGHT
THESE DOCUMENTS ARE PROTECTED BY UNITED STATES COPYRIGHT LAW. THEY HAVE BEEN PREPARED SPECIFICALLY FOR THE PROJECT IDENTIFIED AND ARE NOT SUITABLE FOR USE ON ANY OTHER PROJECT OR AT ANY OTHER LOCATION WITHOUT THE EXPRESS WRITTEN APPROVAL AND PARTICIPATION OF IARCHITECTURE. REPRODUCTION OF THESE DOCUMENTS MUST BE AUTHORIZED BY THE ARCHITECT. ALL RIGHTS ARE RESERVED TO IARCHITECTURE.

RESPONSIBILITY MATRIX

REVISIONS	
NO.	DATE

PROJECT NO: IA 2119

SHEET A5.01

DATE 11/12/21

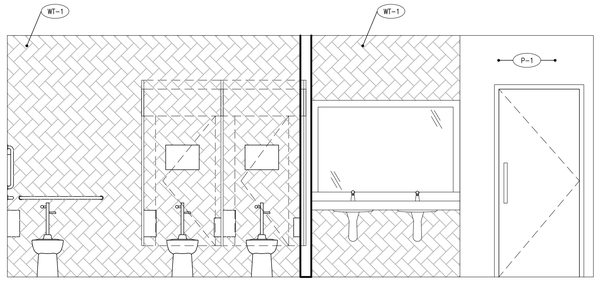

D1 RESTROOM INTERIOR ELEVATION

SCALE: 3/8" = 1'-0"

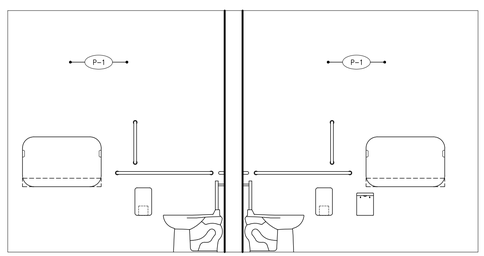

C1 RESTROOM INTERIOR ELEVATION

SCALE: 3/8" = 1'-0"

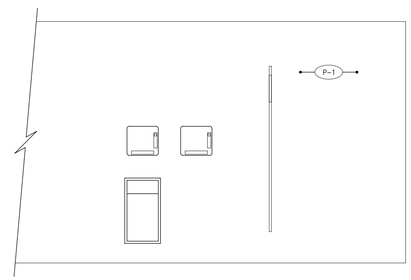

C2 RESTROOM INTERIOR ELEVATION

SCALE: 3/8" = 1'-0"

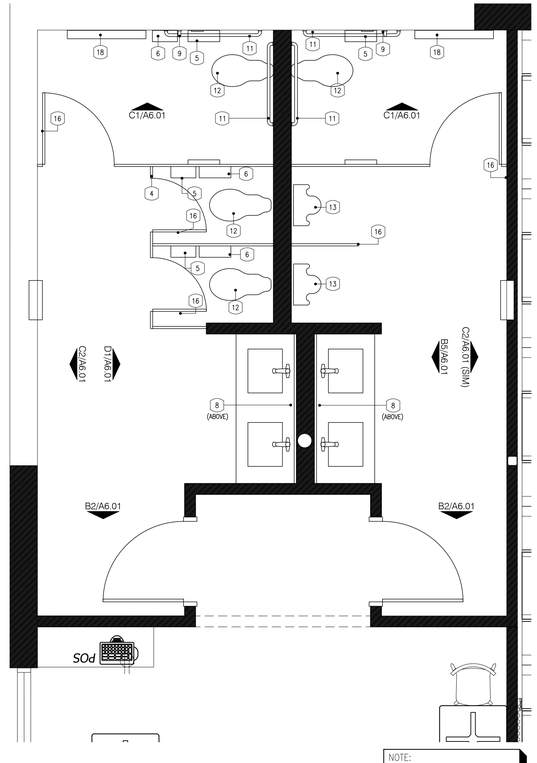

A1 ENLARGED RESTROOM PLAN

SCALE: 3/8" = 1'-0"

NOTE:
SEE SHEET A8.01 FOR ACCESSIBLE MOUNTING HEIGHTS & LOCATIONS

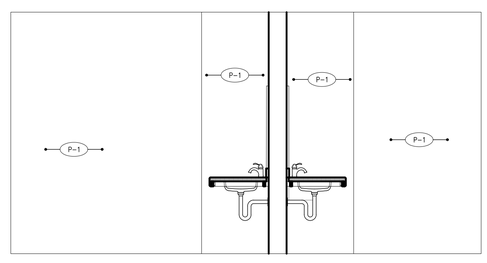

B2 RESTROOM INTERIOR ELEVATION

SCALE: 3/8" = 1'-0"

NOTE:
RESTROOMS FIXTURE LOCATIONS ARE EXISTING EXCEPT WHERE OTHERWISE NOTED. GC TO VERIFY EXISTING CONDITIONS.

TOILET ACCESSORY SCHEDULE

ITEM	ACCESSORY	LOCATION	MANU.	MODEL NO.	COLOR/STYLE	SIZE/REMARKS
1	ACCESS. SOAP DISPENSER	LAVATORY	BRADLEY	BRADEX 6326	S.S. SATIN FINISH	–
2	ACCESSIBLE FAUCET (MANUAL)	LAVATORY	MOEN	WS84414MSRN	BRUSHED NICKEL	SURFACE MOUNTED ON LAVATORY COUNTER
3	ACCESS. LAVATORY	LAVATORY	KOHLER	K-2330	WHITE	UNDERMOUNT –KATHRYN SINK
4	TOILET PARTITIONS	LAVATORY	BOBRICK	HIGH PRESSURE LAMINATE CLASSIC SERIES	FORMICA CHESTNUT WOODLINE 5884-58	CHROME HARDWARE OR EQUAL. FLOOR MOUNTED O.H. BRACED
5	T.P. DISPENSER	W.C. STALL	SAN JAMAR	R3500TBK	BLACK PLASTIC	SURFACE MOUNTED –PROVIDED BY OWNER & INSTALLED BY G.C.
6	SANITARY NAPKIN DISPOSAL	WOMEN'S W.C. STALL	BOBRICK	B-270	S.S. SATIN FINISH	SURFACE MOUNTED
7	RECESS. WASTE RECEPT.	LAVATORY	BOBRICK	B-364	S.S. SATIN FINISH	RECESSED
8	WALL HUNG MIRROR	–	–	–	–	5'-3" WIDE, 40" TALL, 1/8"T. CLEAR TEMPERED GLASS, FRAMELESS
9	GRAB BARS	ACCESS. STALLS	BRADLEY	8120	S.S.	18" LONG, 1 1/2"ø WITH PEENED GRIP MOUNTED 40" A.F.F. & 40" AWAY FROM WALL. PROVIDE BLOCKING AS REQUIRED. (BY G.C.)
10	GRAB BARS	ACCESS. STALLS	BRADLEY	8120	S.S.	36" LONG, 1 1/2"ø WITH PEENED GRIP MOUNTED 36" A.F.F. & 6" AWAY FROM WALL. PROVIDE BLOCKING AS REQUIRED. (BY G.C.)
11	GRAB BARS	ACCESS. STALLS	BRADLEY	8120	S.S.	42" LONG, 1 1/2"ø WITH PEENED GRIP MOUNTED 36" A.F.F. & 6" AWAY FROM WALL. PROVIDE BLOCKING AS REQUIRED. (BY G.C.)
12	ACCESS. FLR. MNTD. WATER CLOSET	W.C. STALLS	AMERICAN STANDARD	3043.001 MADERA	WHITE	W/ MANUAL FLUSHOMETER
13	WALL MOUNTED URINAL	MEN'S W.C. STALL	AMERICAN STANDARD	6601.012 LYNBROOK	WHITE	W/ MANUAL FLUSHOMETER
14	MEN'S BRAILLE SAFETY SIGN	–	MGT. CO.	–	–	MOUNTED 60" A.F.F. TO CENTERLINE – (BY G.C.)
15	WOMEN'S BRAILLE SAFETY SIGN	–	MGT. CO.	–	–	MOUNTED 60" A.F.F. TO CENTERLINE – (BY G.C.)
16	COAT HOOKS	W.C. STALLS	TBD	–	–	MOUNTED 60" A.F.F.
17	TOILET SEAT COVERS	W.C. STALLS	BOBRICK	B-221	S.S.	SURFACE MOUNTED ON PARTITION
18	BABY CHANGING STATION	H.C. STALLS	KOALA KARE	KB200-05	"WHITE GRANITE"	44" A.F.F. TO HANDLE CENTERLINE, PROVIDE CONT. METAL OR FRT WOOD BLOCKING AS REQUIRED

NOTES
1. ALL TOILET ACCESSORIES SHALL MEET ALL REQUIREMENTS OF THE A.D.A.& G ACCESSIBILITY GUIDELINES
2. LAVATORY MIRRORS TO BE MOUNTED SO THAT REFLECTING SURFACE IS 40" MAX. ABOVE THE FLOOR.
3. PROVIDE SOLID WOOD 2x BLOCKING AT ALL GRAB BAR LOCATIONS.
4. HOT WATER AND DRAIN PIPES EXPOSED UNDER SINK MUST BE INSULATED TO PROTECT AGAINST CONTACT. WRAP EXPOSED PLUM WITH WHITE VINYL INSULATED KIT.
5. FLUSH CONTROLS FOR WATER CLOSETS SHALL BE LOCATED ON THE WIDE SIDE OF THE W.C.
6. G.C. TO VERIFY: PRIOR TO INSTALLING RECESSED PAPER TOWEL HOLDER, VERIFY LIGHT SWITCH LOCATION AND LOCATE PAPER TOWEL DISPENSER ACCORDINGLY.
7. CONTRACTOR TO PROVIDE FRT WD. BLOCKING IN WALL CAVITIES AS REQ. TO SUPPORT ALL FIXTURES, FURNISHINGS & EQUIPMENT REGARDLESS WHETHER ITEMS ARE SUPPLIED BY OWNER OR CONTRACTOR.
8. ALL GYP. BOARD INSTALLED IN TOILET ROOMS SHALL BE MOISTURE RESISTANT.

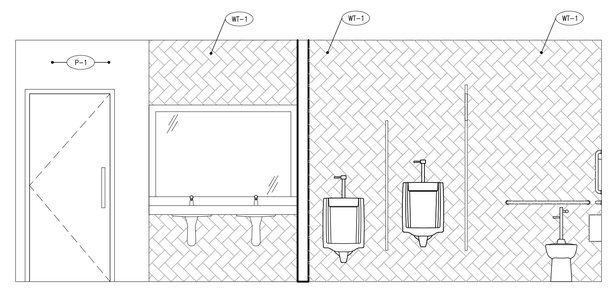

B5 RESTROOM INTERIOR ELEVATION

SCALE: 3/8" = 1'-0"

RESTROOM FINISH SCHEDULE

P-1
PAINT
MANUFACTURER: SHERWIN WILLIAMS
MODEL #: SW 7017
COLOR: DORIAN GRAY
NOTES: EPOXY PAINTED IN RESTROOMS

WT-1
CERAMIC TILE
MANUFACTURER: DALTILE
MODEL #: ANNAPOLIS
COLOR: SAIL
NOTES: HERRINGBONE PATTERN ON RESTROOM WET WALLS

IA ARCHITECTURE

SMOKEY BONES
UTICA, MI

STATE OF MICHIGAN
JEFF SPIKES
LICENSE NUMBER
1301069572
ARCHITECT

JEFF SPIKES, ARCHITECT
LICENSE NO. 1301069572

COPYRIGHT
THESE DOCUMENTS ARE PROTECTED BY UNITED STATES COPYRIGHT LAW. THEY HAVE BEEN PREPARED SPECIFICALLY FOR THE PROJECT IDENTIFIED AND ARE NOT SUITABLE FOR USE ON ANY OTHER PROJECT OR AT ANY OTHER LOCATION WITHOUT THE EXPRESS WRITTEN APPROVAL AND PARTICIPATION OF IARCHITECTURE. REPRODUCTION OF THESE DOCUMENTS MUST BE AUTHORIZED BY THE ARCHITECT. ALL RIGHTS ARE RESERVED TO IARCHITECTURE.

RESTROOM PLAN & DETAILS

REVISIONS	
NO.	DATE

PROJECT NO: IA 2119

SHEET A6.01

DATE 11/12/21

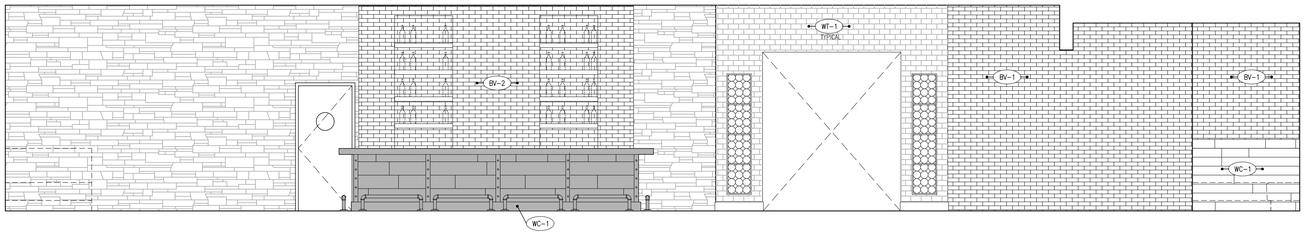

D1 INTERIOR ELEVATION

SCALE: 1/4" = 1'-0"

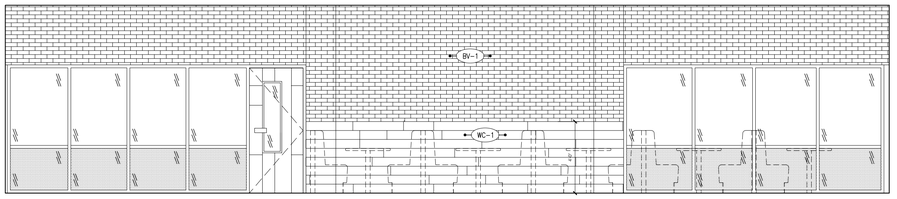

C1 INTERIOR ELEVATION

SCALE: 1/4" = 1'-0"

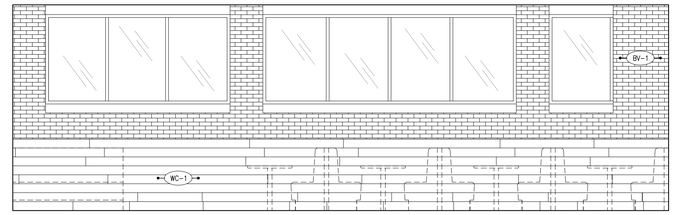

C4 INTERIOR ELEVATION

SCALE: 1/4" = 1'-0"

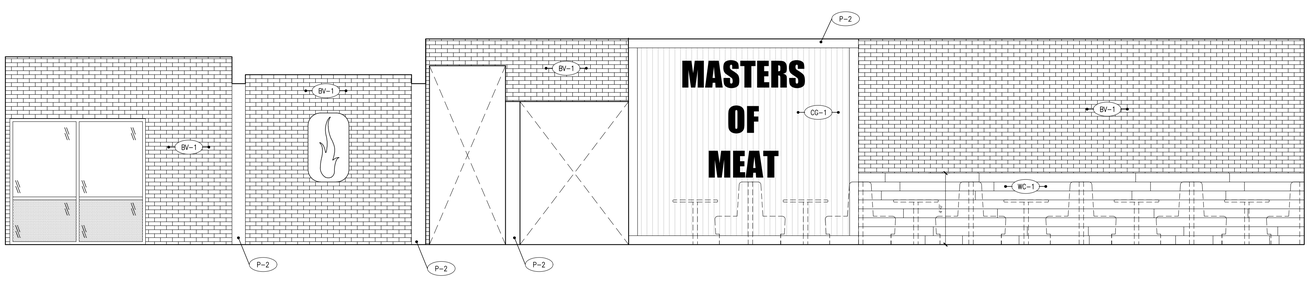

B1 INTERIOR ELEVATION

SCALE: 1/4" = 1'-0"

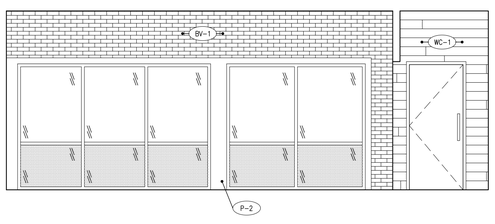

A1 INTERIOR ELEVATION

SCALE: 1/4" = 1'-0"

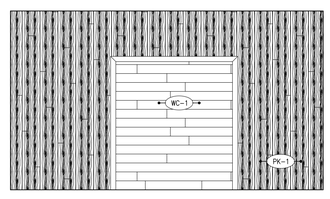

A3 INTERIOR ELEVATION

SCALE: 1/4" = 1'-0"

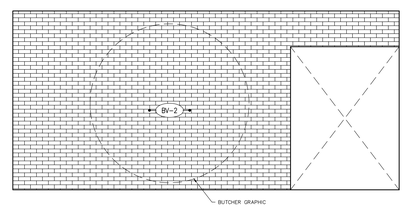

A5 INTERIOR ELEVATION

SCALE: 1/4" = 1'-0"

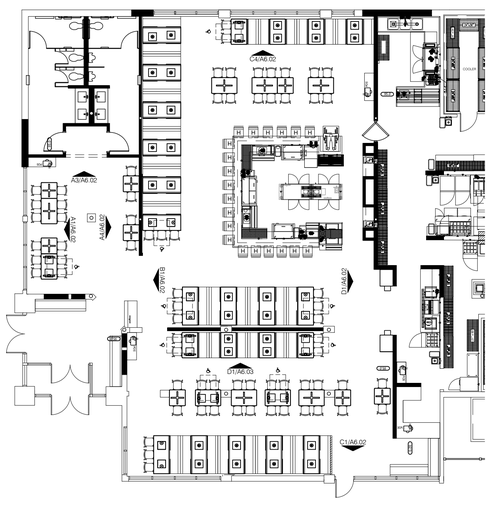

A5 KEY PLAN

SCALE: N.T.S.

INTERIOR FINISH SCHEDULE

P-1 PAINT
MANUFACTURER: SHERWIN WILLIAMS
MODEL #: SW 7017
COLOR: DORIAN GRAY
NOTES:

P-2 PAINT
MANUFACTURER: SHERWIN WILLIAMS
MODEL #: SW 7020
COLOR: BLACK FOX
NOTES:

WT-1 CERAMIC TILE
MANUFACTURER: DALTILE
MODEL #: ANNAPOLIS
COLOR: SAIL

BV-1 BRICK VENEER
MANUFACTURER: REPLICATIONS UNLIMITED
MODEL #: URESTONE, ST. LOUIS BRICK
COLOR: ADOBE

BV-2 BRICK VENEER
MANUFACTURER: REPLICATIONS UNLIMITED
MODEL #: URESTONE, ST. LOUIS BRICK
COLOR: PAINTED WHITE

WC-1 VINYL WALL COVERING
MANUFACTURER: KOROSEAL
MODEL #: HERITAGE WOOD, HW29-60
COLOR: ALDER
REMARKS: REPEAT: V:35.5"

SV-1 NATURAL STONE VENEER
MANUFACTURER: REALSTONE
MODEL #: 6"x24" ACCENT TILE
COLOR: TERRACOTTA

CG-1 CORRUGATED PANEL
MANUFACTURER: TBD
SIZE #: 3/4" CORRUGATED METAL PANEL
COLOR: GALVANIZED
NOTES: HORIZONTAL AT WAINSCOTS
VERTICAL AT "MASTERS OF MEAT"

PK-1 BURNISHED WOOD
MANUFACTURER: TBD
SIZE: 1"x8" PINE PLANKS
FINISH: TORCH BURNISHED TO DARK FINISH,
THEN APPLY MATTE EPOXY

FRP-1 FRP PANELS
MANUFACTURER: TBD
SIZE: 4'X10' PANELS
FINISH: MATCH EXISTING

iARCHITECTURE

SMOKEY BONES
UTICA, MI

STATE OF MICHIGAN
JEFF SPIKES
LICENSE NUMBER
1301069572
ARCHITECT

JEFF SPIKES, ARCHITECT
LICENSE NO. 1301069572

COPYRIGHT
THESE DOCUMENTS ARE PROTECTED BY UNITED STATES COPYRIGHT LAW. THEY HAVE BEEN PREPARED SPECIFICALLY FOR THE PROJECT IDENTIFIED AND ARE NOT SUITABLE FOR USE ON ANY OTHER PROJECT OR AT ANY OTHER LOCATION WITHOUT THE EXPRESS WRITTEN APPROVAL AND PARTICIPATION OF iARCHITECTURE. REPRODUCTION OF THESE DOCUMENTS MUST BE AUTHORIZED BY THE ARCHITECT. ALL RIGHTS ARE RESERVED TO iARCHITECTURE.

INTERIOR ELEVATIONS

REVISIONS	
NO.	DATE

PROJECT NO: IA 2119

SHEET A6.02

DATE 11/12/21

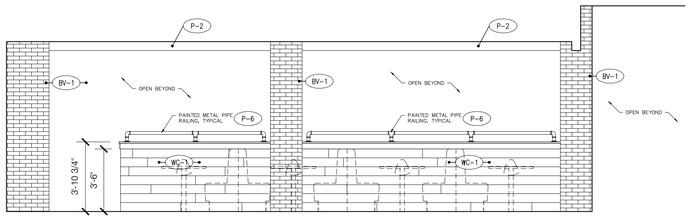

D1 INTERIOR ELEVATION

SCALE: 1/4" = 1'-0"

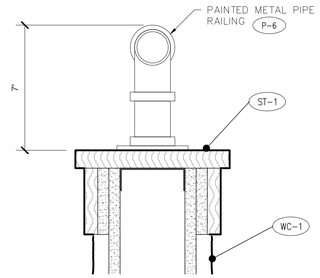

D3 METAL PIPE RAILING DETAIL

SCALE: 3"=1'-0"

INTERIOR FINISH SCHEDULE

P-1 PAINT
MANUFACTURER: SHERWIN WILLIAMS
MODEL #: SW 7017
COLOR: DORIAN GRAY
NOTES:

P-2 PAINT
MANUFACTURER: SHERWIN WILLIAMS
MODEL #: SW 7020
COLOR: BLACK FOX
NOTES:

WT-1 CERAMIC TILE
MANUFACTURER: DALTILE
MODEL #: ANNAPOLIS
COLOR: SAIL

BV-1 BRICK VENEER
MANUFACTURER: REPLICATIONS UNLIMITED
MODEL #: URESTONE, ST. LOUIS BRICK
COLOR: ADOBE

BV-2 BRICK VENEER
MANUFACTURER: REPLICATIONS UNLIMITED
MODEL #: URESTONE, ST. LOUIS BRICK
COLOR: PAINTED WHITE

WC-1 VINYL WALL COVERING
MANUFACTURER: KOROSEAL
MODEL #: HERITAGE WOOD, HW29-60
COLOR: ALDER
REMARKS: REPEAT: V:35.5"

SV-1 NATURAL STONE VENEER
MANUFACTURER: REALSTONE
MODEL #: 6"x24" ACCENT TILE
COLOR: TERRACOTTA

CG-1 CORRUGATED PANEL
MANUFACTURER: TBD
SIZE #: 3/4" CORRUGATED METAL PANEL
COLOR: GALVANIZED
NOTES: HORIZONTAL AT WAINSCOTS
VERTICAL AT "MASTERS OF MEAT"

PK-1 BURNISHED WOOD
MANUFACTURER: TBD
SIZE: 1"x6" PINE PLANKS
FINISH: TORCH BURNISHED TO DARK FINISH, THEN APPLY MATTE EPOXY

FRP-1 FRP PANELS
MANUFACTURER: TBD
SIZE: 4'X10' PANELS
FINISH: MATCH EXISTING

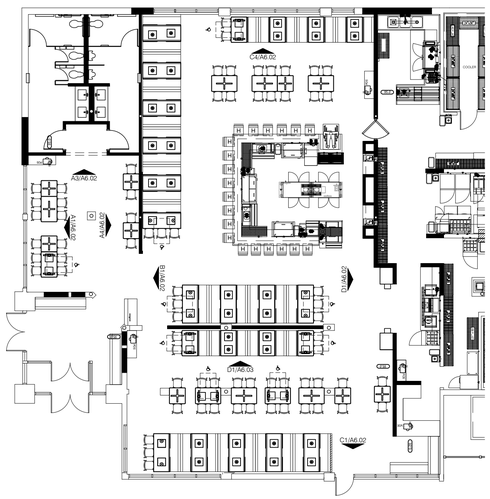

A5 KEY PLAN

SCALE: N.T.S.

IA ARCHITECTURE

SMOKEY BONES
UTICA, MI

STATE OF MICHIGAN
JEFF SPIKES
LICENSE NUMBER
1301069572
ARCHITECT

JEFF SPIKES, ARCHITECT
LICENSE NO. 1301069572

COPYRIGHT
THESE DOCUMENTS ARE PROTECTED BY UNITED STATES COPYRIGHT LAW. THEY HAVE BEEN PREPARED SPECIFICALLY FOR THE PROJECT IDENTIFIED AND ARE NOT SUITABLE FOR USE ON ANY OTHER PROJECT OR AT ANY OTHER LOCATION WITHOUT THE EXPRESS WRITTEN APPROVAL AND PARTICIPATION OF IARCHITECTURE. REPRODUCTION OF THESE DOCUMENTS MUST BE AUTHORIZED BY THE ARCHITECT. ALL RIGHTS ARE RESERVED TO IARCHITECTURE.

INTERIOR ELEVATIONS

REVISIONS	
NO.	DATE

PROJECT NO: IA 2119

SHEET A6.03

DATE 11/12/21

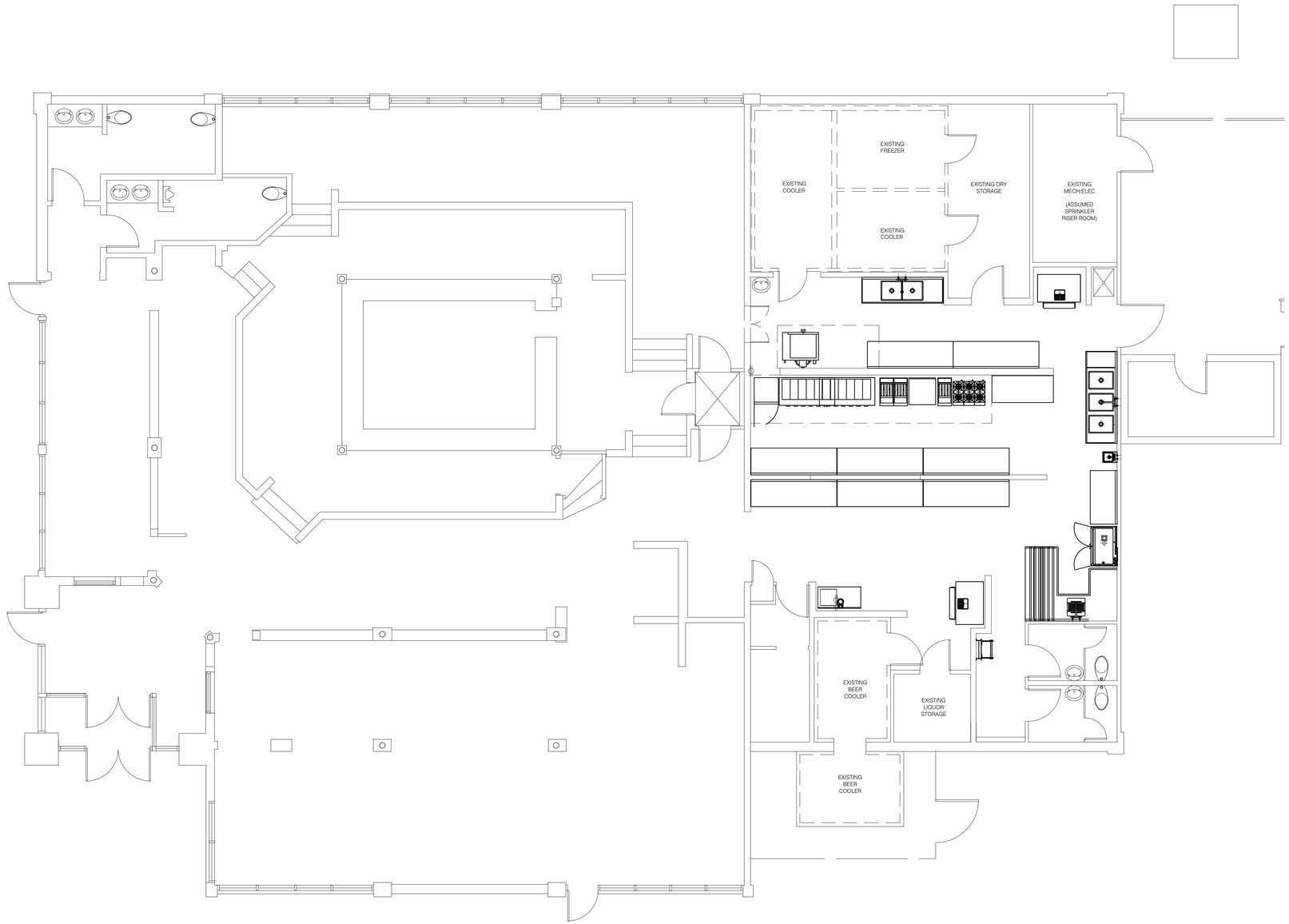

EXISTING PLAN

A1 REFLECTED CEILING PLAN

SCALE: 3/16" = 1'-0"

iA ARCHITECTURE

SMOKEY BONES
UTICA, MI

STATE OF MICHIGAN
JEFF SPIKES
REGISTERED
1301069572
ARCHITECT

JEFF SPIKES, ARCHITECT
LICENSE NO. 1301069572

COPYRIGHT
THESE DOCUMENTS ARE PROTECTED BY UNITED STATES COPYRIGHT LAW. THEY HAVE BEEN PREPARED SPECIFICALLY FOR THE PROJECT IDENTIFIED AND ARE NOT SUITABLE FOR USE ON ANY OTHER PROJECT OR AT ANY OTHER LOCATION WITHOUT THE EXPRESS WRITTEN APPROVAL AND PARTICIPATION OF iARCHITECTURE. REPRODUCTION OF THESE DOCUMENTS MUST BE AUTHORIZED BY THE ARCHITECT. ALL RIGHTS ARE RESERVED TO iARCHITECTURE.

EXISTING REFLECTED CEILING PLAN

REVISIONS	
NO.	DATE

PROJECT NO: IA 2119

SHEET A7.00

DATE 11/12/21

NOTE: EXISTING CEILING GRID, TILES, HVAC DIFFUSERS, DUCTWORK, LOW VOLTAGE WIRING, ETC TO BE DEMO'D BY G.C. PRIOR TO NEW WORK COMMENCEMENT.

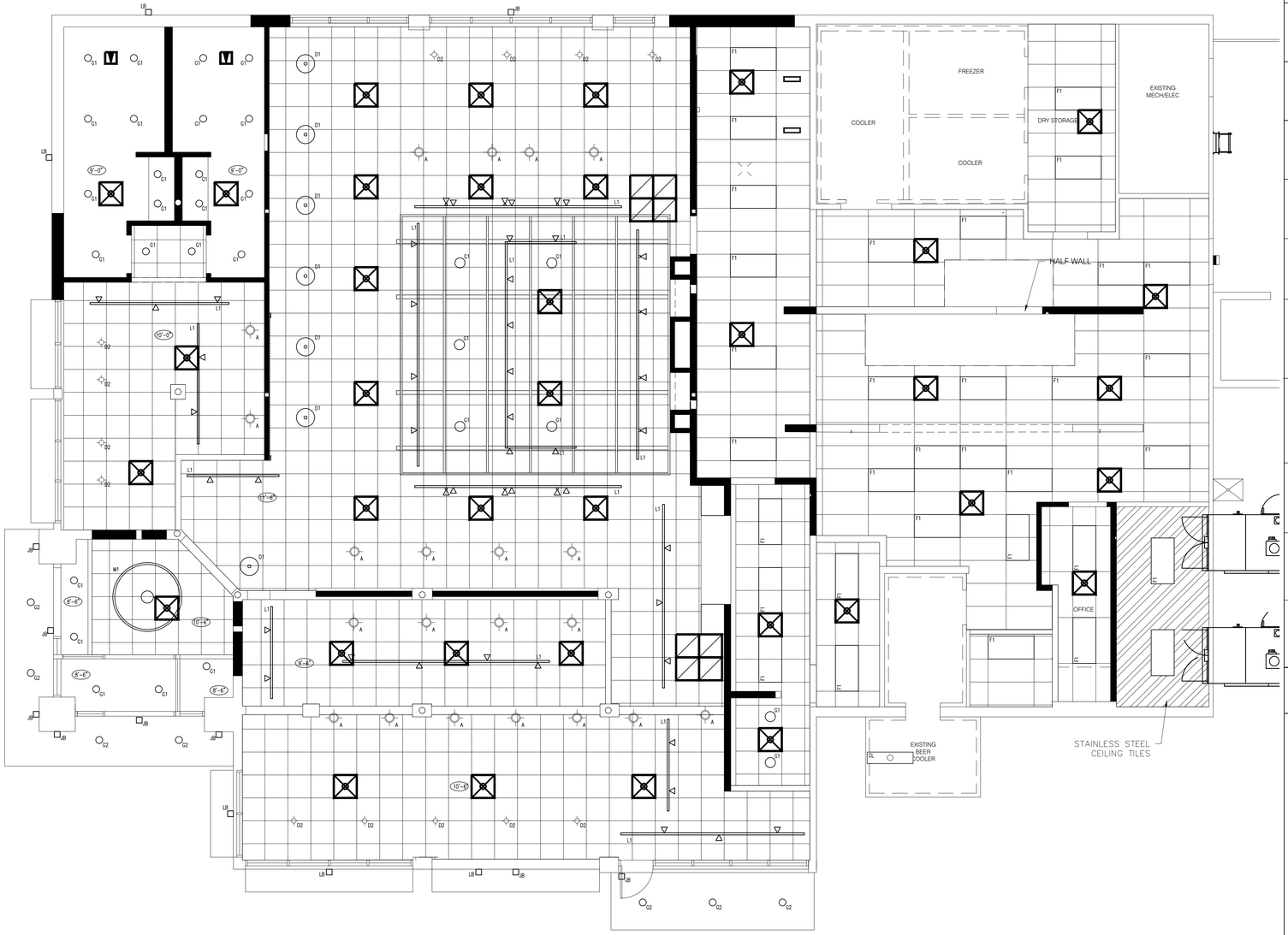

A1 REFLECTED CEILING PLAN

SCALE: 3/16" = 1'-0"

REFLECTED CEILING PLAN SYMBOL LEGEND

A		PENDANT LIGHT FIXTURE MANUFACTURER: HI-LITE MFG. CO. MODEL #: H-VLS8PNT1 DIMENSIONS: 8 1/2"H x 12"Ø FINISH: OLD NICKEL LAMP: 11.5W LED A19 REMARKS:	MOUNT FIXTURES TO UNISTRUT SUPPORT ABOVE -PAINT UNISTRUT & THREADED RODS 'BLACK' P-7
G1		6"Ø RECESSED DOWNLIGHT MANUFACTURER: HALO COMMERCIAL HOUSING MODEL #: HALO HC6 6" CAN LAMP: HALO HM6-12-835 (6" LED MODULE, 1,000 LUMENS, 80 CRI, 3500K CCT)	PAINT TRIMS TO MATCH ADJACENT SURFACES
G2		6"Ø RECESSED DOWNLIGHT MANUFACTURER: HALO COMMERCIAL HOUSING MODEL #: HALO HC6 6" CAN LAMP: HALO HM6-12-835 (6" LED MODULE, 1,000 LUMENS, 80 CRI, 3500K CCT)	REQUIRES INSTALLATION WITH TRIMS AND BAFFLES THAT ARE UL WET LOCATION APPROVED.
M1		CUSTOM WHEEL LIGHT FIXTURE MANUFACTURER: HI-LITE MFG. CO. MODEL #: H-VLSMTRVB-4 DIMENSIONS: 72"Ø X 12"H FINISH: 117-PAINTED STEEL REMARKS: MOUNTED ON STEM W/4 AIRCRAFT CABLES 120V	
S1	—X—	EXTERIOR GARDEN STRING LIGHTING MANUFACTURER: AMERICAN LIGHTING MODEL #: LS2-MS-24-48-BK DIMENSIONS: ~80'-0" TOTAL LENGTH FINISH: BLACK	
D1		PENDANT LIGHT FIXTURE MANUFACTURER: HI-LITE MFG. CO. MODEL #: H-VLS8NMP-3 DIMENSIONS: 12"H x 19"Ø FINISH: BK01 BLACK (EXT), 156 RED/ORANGE (INT), 91 BLACK (CANOPY) LAMP: 200W REMARKS:	
D2		PENDANT LIGHT FIXTURE MANUFACTURER: CONTECH LIGHTING MODEL #: OF130B DIMENSIONS: 10 1/8"H x 4 3/4"Ø FINISH: RED LAMP: TBD	
F1		2x4 LED LIGHT FIXTURE MANUFACTURER: METALUX MODEL #: 24GSR432C REMARKS: 2X4 LED LAY-IN	
F2		2x2 FLUORESCENT LIGHT FIXTURE MANUFACTURER: METALUX MODEL #: SSF-232-120-EB8 W/ REFLECTOR OR EQUAL LAMP: (2) 32W T8 REMARKS:	EXISTING
L1		MONOPOINT/TRACK LIGHTING MANUFACTURER: JUNO MODEL #: R600L-G2-30K-80CRI-PDIM-FL-BL / T88L / T48L / T38BL / T23BL FINISH: BLACK LAMP: 10W LED REMARKS: -SEE GENERAL NOTES & INTERIOR ELEVATIONS FOR MOUNTING INFORMATION -PROVIDE 24" INCREMENTS IN LENGTH (F.V.) -B/O TRACK @ 11'-0" A.F.F. (TYP.)	
JB		JUNCTION BOX SIGN POWER PROVIDE POWER FOR ILLUMINATED SIGNAGE COORDINATE WITH SIGNAGE COMPANY	
LB		JUNCTION BOX LIGHTBAND POWER PROVIDE POWER FOR ILLUMINATED LIGHTBAND COORDINATE WITH SIGNAGE COMPANY	
T1		DECORATIVE WATER PROOF EXTERIOR GOOSE NECK MANUFACTURER: HI-LITE MFG. CO. MODEL #: H-EM-10-96 DIMENSIONS: 11"H X 10"W FINISH:96 (GALV.) LAMP: 20W LED REMARKS: WEATHERPROOF	

R.C.P. GENERAL NOTES

1. ALL FRONT OF HOUSE LIGHT FIXTURES TO BE DIMMABLE.
2. PREP & PAINT EXPOSED ACCESSORIES & ELECTRICAL CONDUIT.
3. ALL PENETRATIONS SHALL BE FIRE SAFED AND ACOUSTICALLY SEALED TO MAINTAIN BASE BUILDING RATINGS AS APPLICABLE.
4. G.C. SHALL PROVIDE BLOCKING, LIGHT GAUGE, OR MTL. FRAMING/UNISTRUT TO SUPPORT ALL CEILING FIXTURES INDEPENDENTLY OF ROOF DECK.
5. SPRINKLER SYSTEM, FIRE ALARM, & FIRE EXTINGUISHER TYPES & LOCATIONS ARE DESIGN/PERMIT/BUILD BY G.C. AT G.C. EXPENSE. G.C. TO VERIFY W/ LANDLORD DESIGNATED CONTRACTORS.
6. VERIFY HEIGHTS AND LOCATIONS OF ALL LIGHTING FIXTURES AND MECHANICAL REGISTERS IN FIELD W/ ARCHITECT AND OWNER. FINISH OF EXPOSED DUCTWORK AND REGISTERS SHALL BE INDICATED ON PLANS & FINISH SCHEDULE.
7. COORDINATE FIRE ALARM DEVICES TO AVOID CONFLICTS WITH FINISHES. SEE INTERIOR ELEVATIONS & DETAILS.
8. ALL LIGHT FIXTURES TO BE U.L. LISTED THROUGHOUT AND SHIELDED AT FOOD PREPARATION AREAS.
9. LIGHTING AT WORK AREAS AND BARS TO BE MIN. 50 FOOTCANDLES (INCLUDING SHIELDED LIGHTING). LIGHTING AT HAND SINK AREAS TO BE MIN. 50 FOOTCANDLES. LIGHTING AT WALK-IN FOOD COOLER AND WALK-IN BEER COOLER TO BE MIN. 20 FOOTCANDLES.
10. CONTRACTOR TO PROVIDE ELECTRICAL AS REQUIRED TO SIGNAGE (INTERIOR & EXTERIOR) -VERIFY LOCATION/HEIGHT AND POWER REQUIREMENTS IN FIELD WITH OWNER.
11. G.C. SHALL PROVIDE PRE-FABRICATED RECESSED METAL ACCESS PANELS IN GYP. BOARD CEILINGS AS REQUIRED FOR THE PROPER MAINTENANCE OF ELECTRICAL EQUIPMENT. G.C. TO COORDINATE SIZES AND LOCATIONS IN FIELD WITH ARCHITECT AND OWNER. PAINT PANELS TO MATCH ADJACENT CEILING FINISH.
12. DECORATIVE PENDANTS: VERIFY HEIGHT IN FIELD WITH ARCHITECT AND OWNER PRIOR TO INSTALLATION. G.C. SHALL NOTIFY ARCHITECT IMMEDIATELY OF ANY DISCREPANCIES NOTED.
13. G.C. TO PROVIDE 10% EXTRA TRACK HEADS.
14. NOT USED
15. ALL EXPOSED LOW-VOLTAGE WIRE (EXCEPT FIRE ALARM WIRING) SHALL BE 'BLACK' OR WRAPPED IN 'BLACK' PVC SHEATH (TYP.)
16. G.C. TO PROVIDE & INSTALL CAGE/SHIELD OVER EMERGENCY ELECTRICAL SHUTOFF SWITCH
17. PAINT ALL RECEPTACLE COVERS & EXPOSED CONDUIT / J-BOXES TO MATCH ADJACENT FINISHES. (TYPICAL, ALL LOCATIONS)
18. MOUNT ALL FIXTURES OVER MOVABLE TABLES ON UNISTRUT OR LIGHTING TRACK AS APPROPRIATE FOR FIXTURE WEIGHT.
19. PAINT ALL UNISTRUTS & THREADED ROD SUPPORTS 'BLACK' (TYPICAL, ALL LOCATIONS)
20. G.C. SHALL PROVIDE BLKG. / UNISTRUT ATTACHED TO ROOF JOISTS AS REQ'D TO MOUNT FIXTURES INDEPENDENT OF ROOF DECK.
21. ALL WIFI, SECURITY, & SPEAKER LOCATIONS TO BE VERIFIED IN FIELD W/ ARCHITECT PRIOR TO INSTALLATION.

R.C.P. KEYNOTES

1 —PROVIDE J-BOX FOR WALL-MOUNTED SIGNAGE
—G.C. TO VERIFY EXACT LOCATION W/ OWNER'S SIGNAGE CONSULTANT
-SEE INTERIOR & EXTERIOR ELEVATIONS

2 —FLAT PANEL T.V. SUPPORT -SEE INTERIOR ELEVATIONS & DETAILS

3 —FLAT PANEL T.V. LOCATION -SEE ELECTRICAL DRAWINGS -CONCEAL T.V./A.V. WIRING FROM PUBLIC VIEW

4 EXPOSED MECH. DUCTS AND DIFFUSERS -SEE MECH DWGS. -PROVIDE PRE-FIN. METAL TRIM RING AROUND DUCT AT CEILING PANEL PENETRATION -SEE INTERIOR ELEVS. FOR PAINT COLOR

5 5A. PROVIDE DIMMABLE J-BOX FOR 'SB' SIGNAGE
5B. PROVIDE DIMMABLE J-BOX FOR FLAME SCONCE
5C. PROVIDE J-BOX FOR GAS SCONCE ELECTRONIC IGNITOR - SEE A4 -SEE PLUMB & ELEC.
5D. J-BOX FOR EXT. FLAME SCONCE -SEE A12

VERIFY FIXTURE HEIGHTS IN FIELD W/ ARCHITECT & OWNER PRIOR TO STEM TRIMMING

IA ARCHITECTURE

SMOKEY BONES
UTICA, MI

STATE OF MICHIGAN
JEFF SPIKES
LICENSE NUMBER 1301069572
ARCHITECT

JEFF SPIKES, ARCHITECT
LICENSE NO. 1301069572

COPYRIGHT
THESE DOCUMENTS ARE PROTECTED BY UNITED STATES COPYRIGHT LAW. THEY HAVE BEEN PREPARED SPECIFICALLY FOR THE PROJECT IDENTIFIED AND ARE NOT SUITABLE FOR USE ON ANY OTHER PROJECT OR AT ANY OTHER LOCATION WITHOUT THE EXPRESS WRITTEN APPROVAL AND PARTICIPATION OF ARCHITECTURE. REPRODUCTION OF THESE DOCUMENTS MUST BE AUTHORIZED BY THE ARCHITECT. ALL RIGHTS ARE RESERVED TO IARCHITECTURE.

REFLECTED CEILING PLAN

REVISIONS	
NO.	DATE

PROJECT NO: IA 2119

SHEET A7.01

DATE 11/12/21

NOTES
1. ALL TOILET ACCESSORIES SHALL MEET ALL REQUIREMENTS OF THE A.D.A.A.G ACCESSIBILITY GUIDELINES
2. LAVATORY MIRRORS TO BE MOUNTED SO THAT REFLECTING SURFACE IS 40" MAX. ABOVE THE FLOOR.
3. HOT WATER AND DRAIN PIPES EXPOSED UNDER SINK MUST BE INSULATED TO PROTECT AGAINST CONTACT.
4. G.C. TO PROVIDE BLOCKING AT ALL ACCESSORIES AS REQUIRED

ACCESSIBLE MOUNTING HEIGHTS NOT TO SCALE

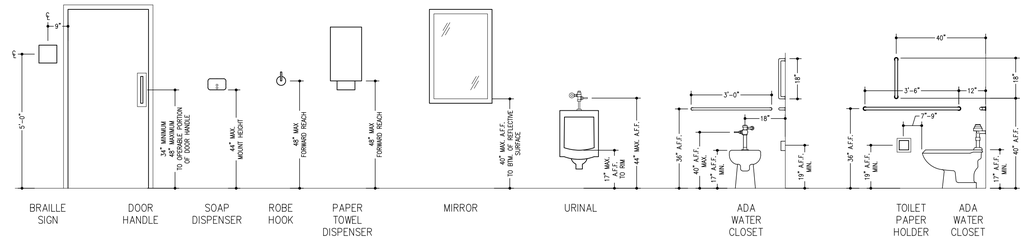

ACCESSIBILITY CLEARANCES NOT TO SCALE

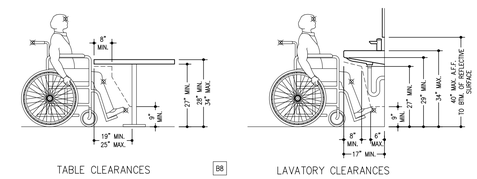

306 Knee and Toe Clearance

306.2 Toe Clearance.

306.2.1 General. Space under an element between the finish floor or ground and 9 inches (230 mm) above the finish floor or ground shall be considered toe clearance and shall comply with 306.2.

306.2.2 Maximum Depth. Toe clearance shall extend 25 inches (635 mm) maximum under an element.

306.2.3 Minimum Required Depth. Where toe clearance is required at an element as part of a clear floor space, the toe clearance shall extend 17 inches (430 mm) minimum under the element.

306.2.4 Additional Clearance. Space extending greater than 6 inches (150 mm) beyond the available knee clearance at 9 inches (230 mm) above the finish floor or ground shall not be considered toe clearance.

306.2.5 Width. Toe clearance shall be 30 inches (760 mm) wide minimum.

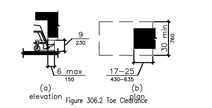

Figure 306.2 Toe Clearance

306.3 Knee Clearance.

306.3.1 General. Space under an element between 9 inches (230 mm) and 27 inches (685 mm) above the finish floor or ground shall be considered knee clearance and shall comply with 306.3.

306.3.2 Maximum Depth. Knee clearance shall extend 25 inches (635 mm) maximum under an element at 9 inches (230 mm) above the finish floor or ground.

306.3.3 Minimum Required Depth. Where knee clearance is required under an element as part of a clear floor space, the knee clearance shall be 11 inches (280 mm) deep minimum at 9 inches (230 mm) above the finish floor or ground, and 8 inches (205 mm) deep minimum at 27 inches (685 mm) above the finish floor or ground.

306.3.4 Clearance Reduction. Between 9 inches (230 mm) and 27 inches (685 mm) above the finish floor or ground, the knee clearance shall be permitted to reduce at a rate of 1 inch (25 mm) in depth for each 6 inches (150 mm) in height.

306.3.5 Width. Knee clearance shall be 30 inches (760 mm) wide minimum.

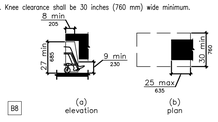

Figure 306.3 Knee Clearance

HANDRAILS

505 Handrails
505.1 General. Handrails provided along walking surfaces complying with 403, required at ramps complying with 405, and required at stairs complying with 504 shall comply with 505.

Advisory 505.1 General. Handrails are required on ramp runs with a rise greater than 6 inches (150 mm) (see 405.8) and on certain stairways (see 504). Handrails are not required on walking surfaces with running slopes less than 1:20. However, handrails are required to comply with 505 when they are provided on walking surfaces with running slopes less than 1:20 (see 403.6). Sections 505.2, 505.3, and 505.10 do not apply to handrails provided on walking surfaces with running slopes less than 1:20 as these sections only reference requirements for ramps and stairs.

505.2 Where Required. Handrails shall be provided on both sides of stairs and ramps.

505.3 Continuity. Handrails shall be continuous within the full length of each stair flight or ramp run. Inside handrails on switchback or dogleg stairs and ramps shall be continuous between flights or runs.

505.4 Height. Top of gripping surfaces of handrails shall be 34 inches (865 mm) minimum and 38 inches (965 mm) maximum vertically above walking surfaces, stair nosings, and ramp surfaces. Handrails shall be at a consistent height above walking surfaces, stair nosings, and ramp surfaces.

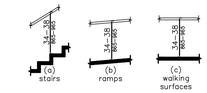

Figure 505.4 Handrail Height

505.5 Clearance. Clearance between handrail gripping surfaces and adjacent surfaces shall be 1 1/2 inches (38 mm) minimum.

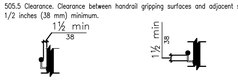

Figure 505.5 Handrail Clearance Figure 505.6 Horizontal Projections Below Gripping Surface

505.6 Gripping Surface. Handrail gripping surfaces shall be continuous along their length and shall not be obstructed along their tops or sides. The bottoms of handrail gripping surfaces shall not be obstructed for more than 20 percent of their length. Where provided, horizontal projections shall occur 1 1/2 inches (38 mm) minimum below the bottom of the handrail gripping surface.

505.7.1 Circular Cross Section. Handrail gripping surfaces with a circular cross section shall have an outside diameter of 1 1/4 inches (32 mm) minimum and 2 inches (51 mm) maximum.

505.7.2 Non-Circular Cross Sections. Handrail gripping surfaces with a non-circular cross section shall have a perimeter dimension of 4 inches (100 mm) minimum and 6 1/4 inches (160 mm) maximum, and a cross-section dimension of 2 1/4 inches (57 mm) maximum.

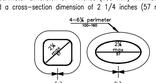

Figure 505.7.2 Handrail Non-Circular Cross Section

505.8 Surfaces. Handrail gripping surfaces and any surfaces adjacent to them shall be free of sharp or abrasive elements and shall have rounded edges.

505.9 Fittings. Handrails shall not rotate within their fittings.

505.10 Handrail Extensions. Handrail gripping surfaces shall extend beyond and in the same direction of stair flights and ramp runs in accordance with 505.10.

505.10.1 Top and Bottom Extension at Ramps. Ramp handrails shall extend horizontally above the landing for 12 inches (305 mm) minimum beyond the top and bottom of ramp runs. Extensions shall return to a wall, guard, or the landing surface, or shall be continuous to the handrail of an adjacent ramp run.

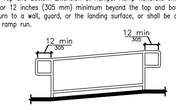

Figure 505.10.1 Top and Bottom Handrail Extension at Ramps

505.10.2 Top Extension at Stairs. At the top of a stair flight, handrails shall extend horizontally above the landing for 12 inches (305 mm) minimum beginning directly above the first riser nosing. Extensions shall return to a wall, guard, or the landing surface, or shall be continuous to the handrail of an adjacent stair flight.

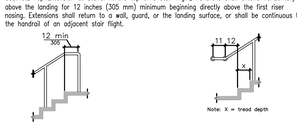

Figure 505.10.2 Top Handrail Extension at Stairs Figure 505.10.3 Bottom Handrail Extension at Stairs

505.10.3 Bottom Extension at Stairs. At the bottom of a stair flight, handrails shall extend at the slope of the stair flight for a horizontal distance at least equal to one tread depth beyond the last riser nosing. Extension shall return to a wall, guard, or the landing surface, or shall be continuous to the handrail of an adjacent stair flight.

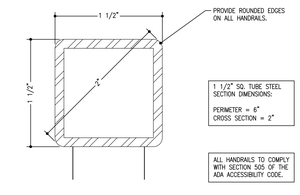

PLUMBING ELEMENTS AND FACILITIES

604.3.1 Size. Clearance around a water closet shall be 60 inches (1525 mm) minimum measured perpendicular from the side wall and 56 inches (1420 mm) minimum measured perpendicular from the rear wall.

Figure 604.3.1 Size of Clearance at Water Closets

604.3.2 Overlap. The required clearance around the water closet shall be permitted to overlap the water closet, associated grab bars, dispensers, sanitary napkin disposal units, coat hooks, shelves, accessible routes, clear floor space and clearances required at other fixtures, and the turning space. No other fixtures or obstructions shall be located within the required water closet clearance.

604.4 Seats. The seat height of a water closet above the finish floor shall be 17 inches (430 mm) minimum and 19 inches (485 mm) maximum measured to the top of the seat. Seats shall not be sprung to return to a lifted position.

604.5 Grab Bars. Grab bars for water closets shall comply with 609. Grab bars shall be provided on the side wall closest to the water closet and on the rear wall.

604.5.1 Side Wall. The side wall grab bar shall be 42 inches (1065 mm) long minimum, located 12 inches (305 mm) maximum from the rear wall and extending 54 inches (1370 mm) minimum from the rear wall.

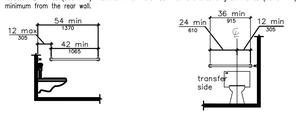

Figure 604.5.1 Side Wall Grab Bar at Water Closets Figure 604.5.2 Rear Wall Grab Bar at Water Closets

604.8.1.2 Doors. Toilet compartment doors, including door hardware, shall comply with 404 except that if the approach is to the latch side of the compartment door, clearance between the door side of the compartment and any obstruction shall be 42 inches (1065 mm) minimum. Doors shall be located in the front partition or in the side wall or partition farthest from the water closet. Where located in the front partition, the door opening shall be 4 inches (100 mm) maximum from the side wall or partition farthest from the water closet. Where located in the side wall or partition, the door opening shall be 4 inches (100 mm) maximum from the front partition. The door shall be self-closing. A door pull complying with 404.2.7 shall be placed on both sides of the door near the latch. Toilet compartment doors shall not swing into the minimum required compartment area.

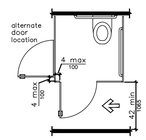

Figure 604.8.1.2 Wheelchair Accessible Toilet Compartment Doors

604.8.1.3 Approach. Compartments shall be arranged for left-hand or right-hand approach to the water closet.

604.8.1.4 Toe Clearance. The front partition and at least one side partition shall provide a toe clearance of 9 inches (230 mm) minimum above the finish floor and 6 inches (150 mm) deep minimum beyond the compartment-side face of the partition, exclusive of partition support members. Compartments for children's use shall provide a toe clearance of 12 inches (305 mm) minimum above the finish floor.

EXCEPTION: Toe clearance at the front partition is not required in a compartment greater than 62 inches (1575 mm) deep with a wall-hung water closet or 65 inches (1650 mm) deep with a floor-mounted water closet. Toe clearance at the side partition is not required in a compartment greater than 66 inches (1675 mm) wide. Toe clearance at the front partition is not required in a compartment for children's use that is greater than 65 inches (1650 mm)deep

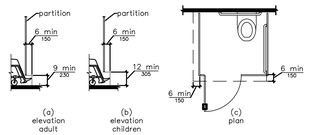

Figure 604.8.1.4 Wheelchair Accessible Toilet Compartment Toe Clearance

COMMUNICATION ELEMENTS AND FEATURES

CHAPTER 7: COMMUNICATION ELEMENTS AND FEATURES

702 Fire Alarm Systems
702.1 General. Fire alarm systems shall have permanently installed audible and visible alarms complying with NFPA 72 (1999 or 2002 edition) (incorporated by reference, see "Referenced Standards" in Chapter 1), except that the maximum allowable sound level of audible notification appliances complying with section 4-3.2.1 of NFPA 72 (1999 edition) shall have a sound level no more than 110 dB at the minimum hearing distance from the audible appliance. In addition, alarms in guest rooms required to provide communication features shall comply with sections 4-3 and 4-4 of NFPA 72 (1999 edition) or sections 7.4 and 7.5 of NFPA 72 (2002 edition).

703 Signs

703.1 General. Signs shall comply with 703. Where both visual and tactile characters are required, either one sign with both visual and tactile characters, or two separate signs, one with visual, and one with tactile characters, shall be provided.

703.2 Raised Characters. Raised characters shall comply with 703.2 and shall be duplicated in braille complying with 703.3. Raised characters shall be installed in accordance with 703.4.

703.2.1 Depth. Raised characters shall be 1/32 inch (0.8 mm) minimum above their background.

703.2.2 Case. Characters shall be uppercase.

703.2.3 Style. Characters shall be sans serif. Characters shall not be italic, oblique, script, highly decorative, or of other unusual forms.

703.2.4 Character Proportions. Characters shall be selected from fonts where the width of the uppercase letter "O" is 55 percent minimum and 110 percent maximum of the height of the uppercase letter "I".

703.2.5 Character Height. Character height measured vertically from the baseline of the character shall be 5/8 inch (16 mm) minimum and 2 inches (51 mm) maximum based on the height of the uppercase letter "I".

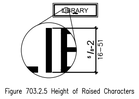

Figure 703.2.5 Height of Raised Characters

703.2.6 Stroke Thickness. Stroke thickness of the uppercase letter "I" shall be 15 percent maximum of the height of the character.

703.2.7 Character Spacing. Character spacing shall be measured between the two closest points of adjacent raised characters within a message, excluding word spaces. Where characters have rectangular cross sections, spacing between individual raised characters shall be 1/8 inch (3.2 mm) minimum and 4 times the raised character stroke width maximum. Where characters have other cross sections, spacing between individual raised characters shall be 1/16 inch (1.6 mm) minimum and 4 times the raised character stroke width maximum at the base of the cross sections, and 1/8 inch (3.2 mm) minimum and 4 times the raised character stroke width maximum at the top of the cross sections. Characters shall be separated from raised borders and decorative elements 3/8 inch (9.5 mm) minimum.

703.2.8 Line Spacing. Spacing between the baselines of separate lines of raised characters within a message shall be 135 percent minimum and 170 percent maximum of the raised character height.

703.3 Braille. Braille shall be contracted (Grade 2) and shall comply with 703.3 and 703.4.

703.3.1 Dimensions and Capitalization. Braille dots shall have a domed or rounded shape and shall comply with Table 703.3.1. The indication of an uppercase letter or letters shall only be used before the first word of sentences, proper nouns and names, individual letters of the alphabet, initials, and acronyms.

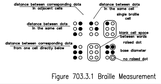

Figure 703.3.1 Braille Measurement

703.3.2 Position. Braille shall be positioned below the corresponding text. If text is multi-lined, braille shall be placed below the entire text. Braille shall be separated 3/8 inch (9.5 mm) minimum from any other tactile characters and 3/8 inch (9.5 mm) minimum from raised borders and decorative elements.

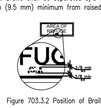

Figure 703.3.2 Position of Braille

703.4 Installation Height and Location. Signs with tactile characters shall comply with 703.4.

703.4.1 Height Above Finish Floor or Ground. Tactile characters on signs shall be located 48 inches (1220 mm) minimum above the finish floor or ground surface, measured from the baseline of the lowest tactile character and 60 inches (1525 mm) maximum above the finish floor or ground surface, measured from the baseline of the highest tactile character.

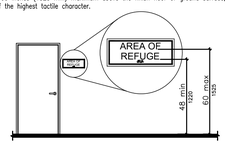

Figure 703.4.1 Height of Tactile Characters Above Finish Floor or Ground

703.4.2 Location. Where a tactile sign is provided at a door, the sign shall be located alongside the door at the latch side. Where a tactile sign is provided at double doors with one active leaf, the sign shall be located on the inactive leaf. Where a tactile sign is provided at double doors with two active leafs, the sign shall be located to the right of the right hand door. Where there is no wall space at the latch side of a single door or at the right side of double doors, signs shall be located on the nearest adjacent wall. Signs containing tactile characters shall be located so that a clear floor space of 18 inches (455 mm) minimum by 18 inches (455 mm) minimum, centered on the tactile characters, is provided beyond the arc of any door swing between the closed position and 45 degree open position.

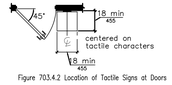

Figure 703.4.2 Location of Tactile Signs at Doors

703.5 Visual Characters. Visual characters shall comply with 703.5.

703.5.1 Finish and Contrast. Characters and their background shall have a non-glare finish. Characters shall contrast with their background with either light characters on a dark background or dark characters on a light background.

703.5.2 Case. Characters shall be uppercase or lowercase or a combination of both.

703.5.3 Style. Characters shall be conventional in form. Characters shall not be italic, oblique, script, highly decorative, or of other unusual forms.

703.5.4 Character Proportions. Characters shall be selected from fonts where the width of the uppercase letter "O" is 55 percent minimum and 110 percent maximum of the height of the uppercase letter "I".

703.5.5 Character Height. Minimum character height shall comply with Table 703.5.5. Viewing distance shall be measured as the horizontal distance between the character and an obstruction preventing further approach towards the sign. Character height shall be based on the uppercase letter "I".

703.5.6 Height From Finish Floor or Ground. Visual characters shall be 40 inches (1015 mm) minimum above the finish floor or ground.

703.5.7 Stroke Thickness. Stroke thickness of the uppercase letter "I" shall be 10 percent minimum and 30 percent maximum of the height of the character.

703.5.8 Character Spacing. Character spacing shall be measured between the two closest points of adjacent characters, excluding word spaces. Spacing between individual characters shall be 10 percent minimum and 35 percent maximum of character height.

703.5.9 Line Spacing. Spacing between the baselines of separate lines of characters within a message shall be 135 percent minimum and 170 percent maximum of the character height.

703.6 Pictograms. Pictograms shall comply with 703.6.

703.6.1 Pictogram Field. Pictograms shall have a field height of 6 inches (150 mm) minimum. Characters and braille shall not be located in the pictogram field.

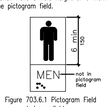

Figure 703.6.1 Pictogram Field dark-on-light.

703.6.2 Finish and Contrast. Pictograms and their field shall have a non-glare finish. Pictograms shall contrast with their field with either a light pictogram on a dark field or a dark pictogram on a light field.

703.6.3 Text Descriptors. Pictograms shall have text descriptors located directly below the pictogram field. Text descriptors shall comply with 703.2, 703.3 and 703.4.

703.7 Symbols of Accessibility. Symbols of accessibility shall comply with 703.7.

703.7.1 Finish and Contrast. Symbols of accessibility and their background shall have a non-glare finish. Symbols of accessibility shall contrast with their background with either a light symbol on a dark background or a dark symbol on a light background.

704 Telephones
704.1 General. Public telephones shall comply with 704.

704.2 Wheelchair Accessible Telephones. Wheelchair accessible telephones shall comply with 704.2.

704.2.1 Clear Floor or Ground Space. A clear floor or ground space complying with 305 shall be provided. The clear floor or ground space shall not be obstructed by bases, enclosures, or seats.

Advisory 704.2.1 Clear Floor or Ground Space. Because clear floor and ground space is required to be unobstructed, telephones, enclosures and related telephone book storage cannot encroach on the required clear floor or ground space and must comply with the provisions for protruding objects. (See Section 307).

704.2.1.1 Parallel Approach. Where a parallel approach is provided, the distance from the edge of the telephone enclosure to the face of the telephone unit shall be 10 inches (255 mm) maximum.

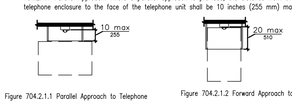

Figure 704.2.1.1 Parallel Approach to Telephone Figure 704.2.1.2 Forward Approach to Telephone

NOTE:

ALL RESTROOM FIXTURES ARE EXISTING.

G.C. SHALL VERIFY EXISTING CONDITIONS AND NEW AS PROPOSED COMPLIES WITH ADA CODE AS INDICATED IN THIS SHEET AND WILL UPDATE EXISTING TO STANDARD AS SHOWN ALL ADA ELEMENTS AS APPLICABLE

IA ARCHITECTURE

SMOKEY BONES
UTICA, MI

STATE OF MICHIGAN
JEFF SPIKES
REGISTERED
ARCHITECT
JEFF SPIKES, ARCHITECT
LICENSE NO. 1301069572

COPYRIGHT
THESE DOCUMENTS ARE PROTECTED BY UNITED STATES COPYRIGHT LAW. THEY HAVE BEEN PREPARED SPECIFICALLY FOR THE PROJECT IDENTIFIED AND ARE NOT SUITABLE FOR USE ON ANY OTHER PROJECT OR AT ANY OTHER LOCATION WITHOUT THE EXPRESS WRITTEN APPROVAL AND PARTICIPATION OF ARCHITECTURE. REPRODUCTION OF THESE DOCUMENTS MUST BE AUTHORIZED BY THE ARCHITECT. ALL RIGHTS ARE RESERVED TO IARCHITECTURE.

STANDARD MOUNTING HTS AND MISC DETAILS

REVISIONS	
NO.	DATE

PROJECT NO: IA 2119

SHEET A8.01

DATE 11/12/21

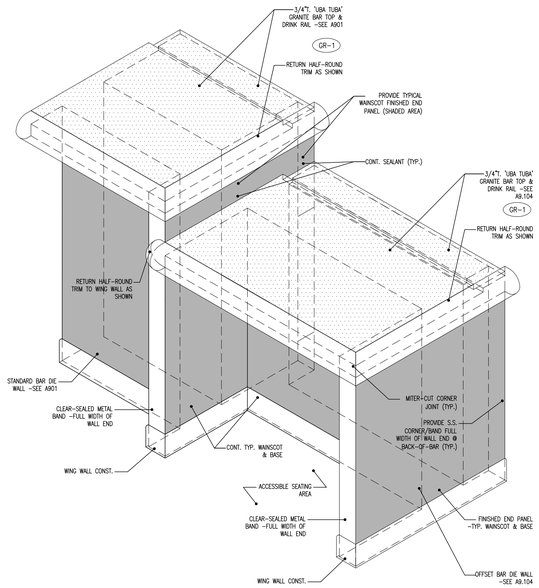

C1 ACCESSIBLE BAR SEATING ISOMETRIC

SCALE: N.T.S.

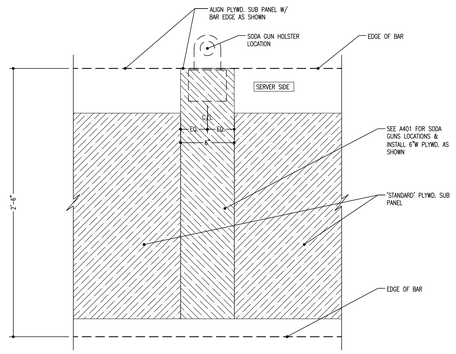

D3 SODA GUN HOLSTER SUPPORT DETAIL

SCALE: N.T.S.

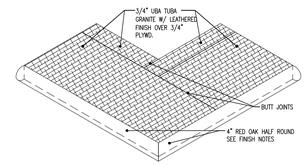

D4 BAR CORNER DETAIL

SCALE: N.T.S.

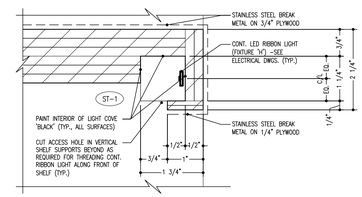

C4 SHELF EDGE DETAIL

SCALE: N.T.S.

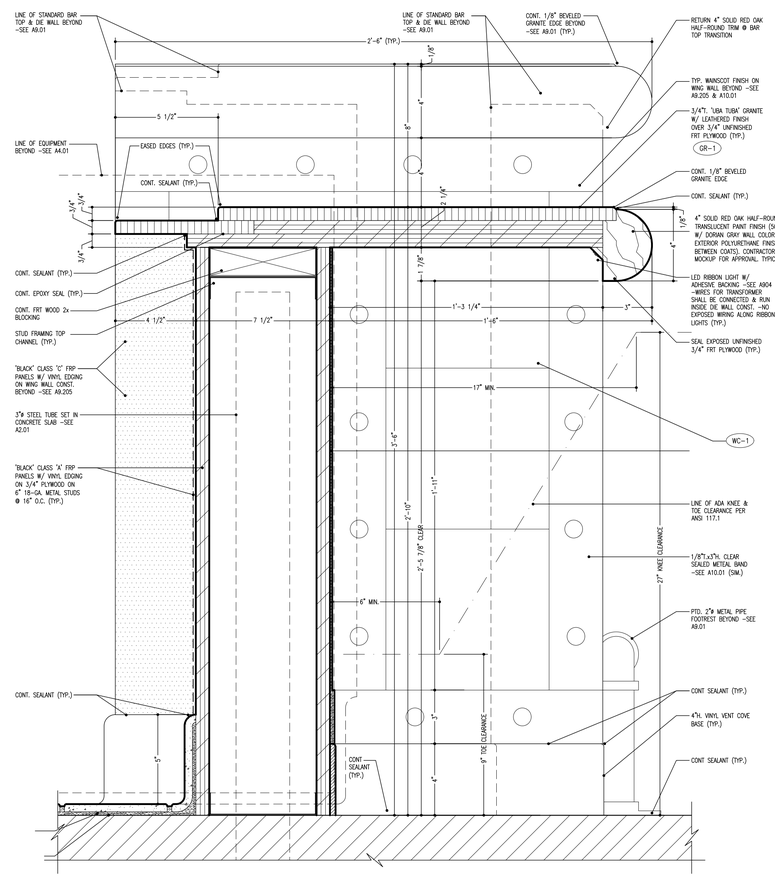

A3 ACCESSIBLE BAR SEATING SECTION

SCALE: 3"=1'-0"

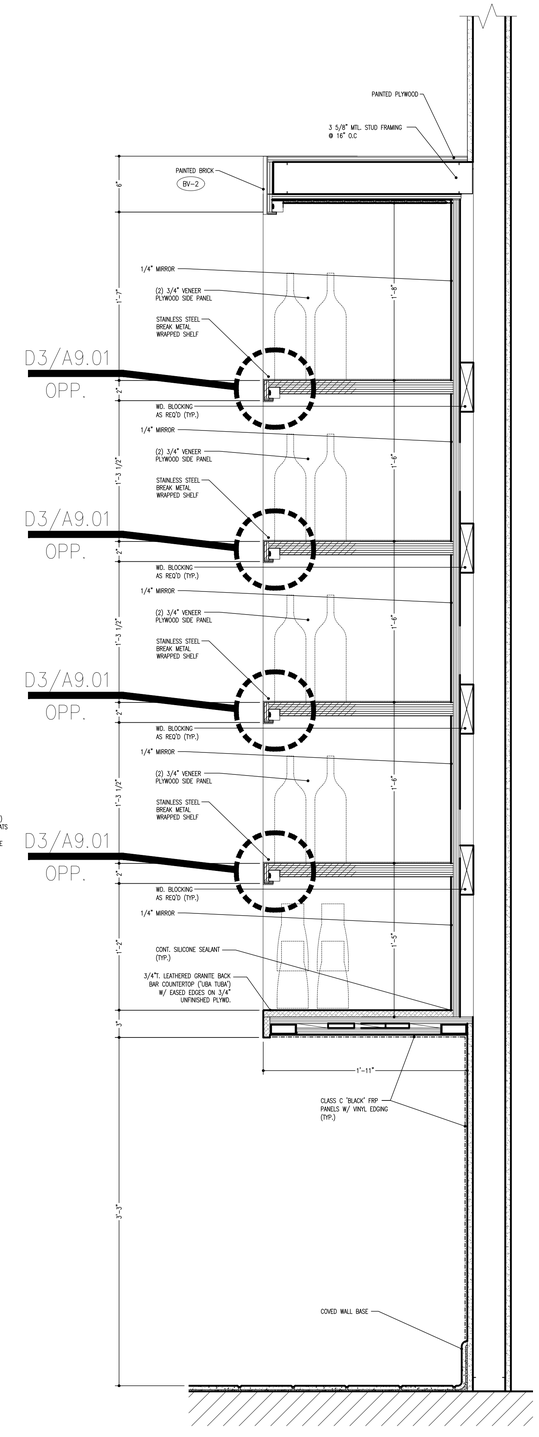

A6 BACK BAR WALL SECTION

SCALE: 1 1/2"=1'-0"

iARCHITECTURE

SMOKEY BONES
UTICA, MI

STATE OF MICHIGAN
JEFF SPIKES
LICENSE NUMBER
13010695
ARCHITECT

JEFF SPIKES, ARCHITECT
LICENSE NO. 1301069572

COPYRIGHT
THESE DOCUMENTS ARE PROTECTED BY UNITED STATES COPYRIGHT LAW. THEY HAVE BEEN PREPARED SPECIFICALLY FOR THE PROJECT IDENTIFIED AND ARE NOT SUITABLE FOR USE ON ANY OTHER PROJECT OR AT ANY OTHER LOCATION WITHOUT THE EXPRESS WRITTEN APPROVAL AND PARTICIPATION OF iARCHITECTURE. REPRODUCTION OF THESE DOCUMENTS MUST BE AUTHORIZED BY THE ARCHITECT. ALL RIGHTS ARE RESERVED TO iARCHITECTURE.

BAR
SECTIONS
AND DETAILS

REVISIONS	
NO.	DATE

PROJECT NO:
IA 2119

SHEET
A9.01

DATE 11/12/21

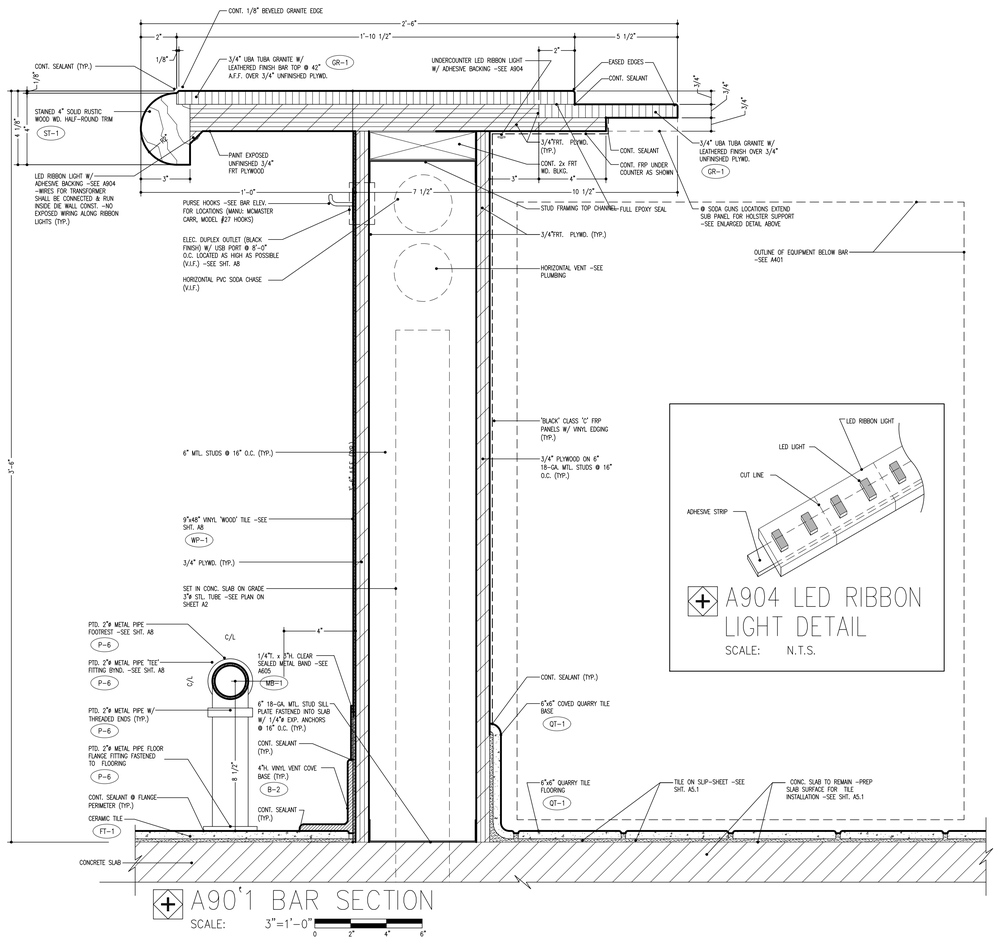

A901 BAR SECTION

SCALE: 3"=1'-0"

0 2" 4" 6"

A904 LED RIBBON LIGHT DETAIL

SCALE: N.T.S.

iARCHITECTURE

SMOKEY BONES
UTICA, MI

STATE OF MICHIGAN
JEFF SPIKES
REGISTERED
1301069572
ARCHITECT

JEFF SPIKES, ARCHITECT
LICENSE NO. 1301069572

COPYRIGHT
THESE DOCUMENTS ARE PROTECTED BY UNITED STATES COPYRIGHT LAW. THEY HAVE BEEN PREPARED SPECIFICALLY FOR THE PROJECT IDENTIFIED AND ARE NOT SUITABLE FOR USE ON ANY OTHER PROJECT OR AT ANY OTHER LOCATION WITHOUT THE EXPRESS WRITTEN APPROVAL AND PARTICIPATION OF iARCHITECTURE. REPRODUCTION OF THESE DOCUMENTS MUST BE AUTHORIZED BY THE ARCHITECT. ALL RIGHTS ARE RESERVED TO iARCHITECTURE.

BAR SECTIONS AND DETAILS

REVISIONS	
NO.	DATE

PROJECT NO: IA 2119

SHEET A9.02

DATE 11/12/21

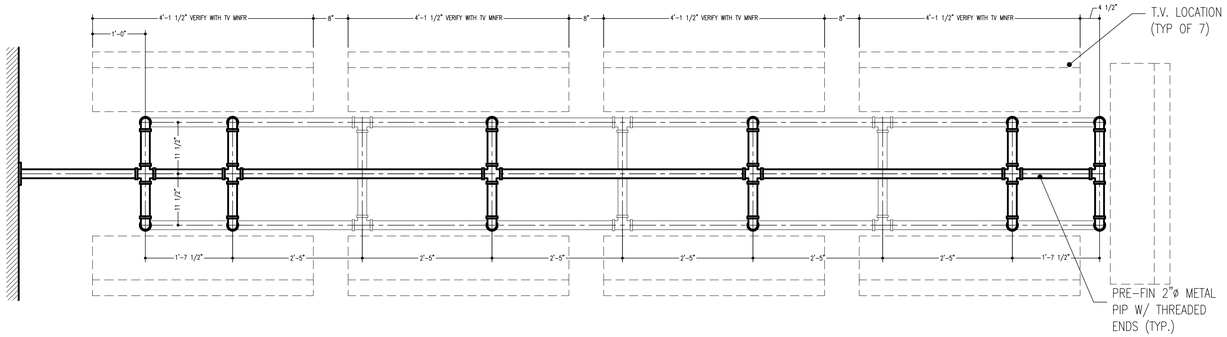

D1 TRELLIS PLAN

SCALE: 3/4"=1'-0"

iA ARCHITECTURE

SMOKEY BONES
UTICA, MI

STATE OF MICHIGAN
JEFF SPIKES
LICENSE NUMBER
1301069572
ARCHITECT

JEFF SPIKES, ARCHITECT
LICENSE NO. 1301069572

COPYRIGHT
THESE DOCUMENTS ARE PROTECTED BY UNITED STATES COPYRIGHT LAW. THEY HAVE BEEN PREPARED SPECIFICALLY FOR THE PROJECT IDENTIFIED AND ARE NOT SUITABLE FOR USE ON ANY OTHER PROJECT OR AT ANY OTHER LOCATION WITHOUT THE EXPRESS WRITTEN APPROVAL AND PARTICIPATION OF iARCHITECTURE. REPRODUCTION OF THESE DOCUMENTS MUST BE AUTHORIZED BY THE ARCHITECT. ALL RIGHTS ARE RESERVED TO iARCHITECTURE.

BAR TRELLIS
PLAN

REVISIONS	
NO.	DATE

PROJECT NO:
IA 2119

SHEET
A9.03

DATE 11/12/21

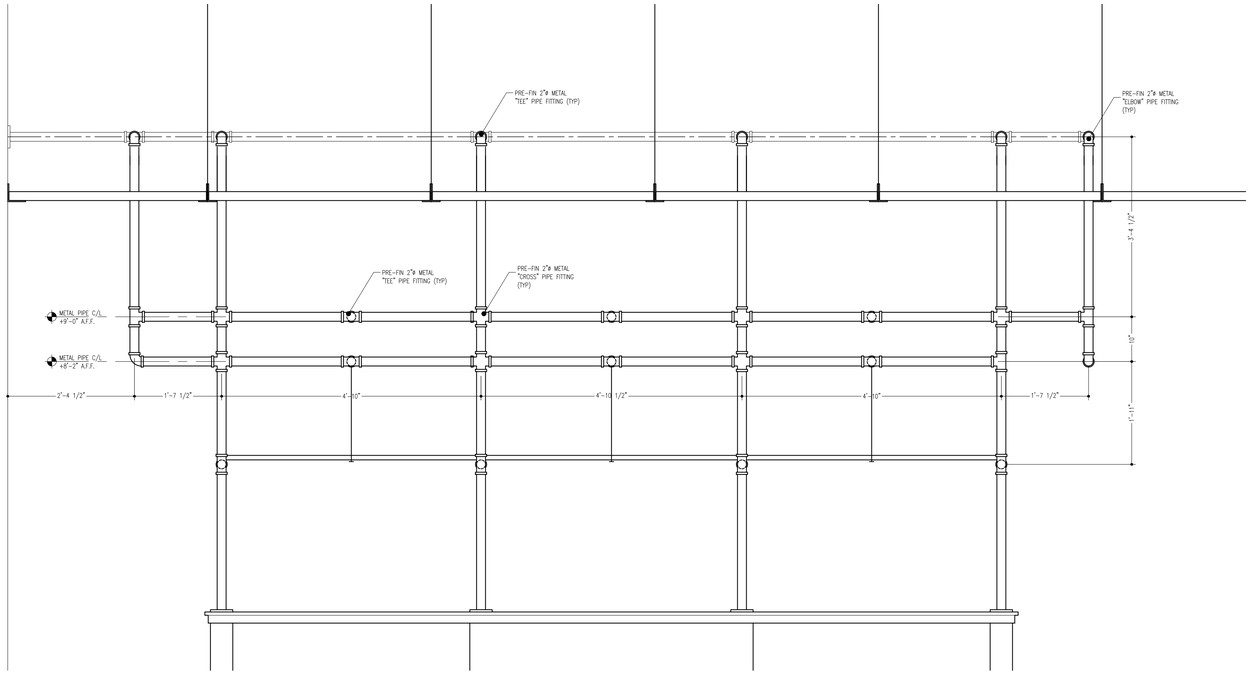

C1 TRELLIS SIDE ELEVATION

SCALE: 3/4"=1'-0"

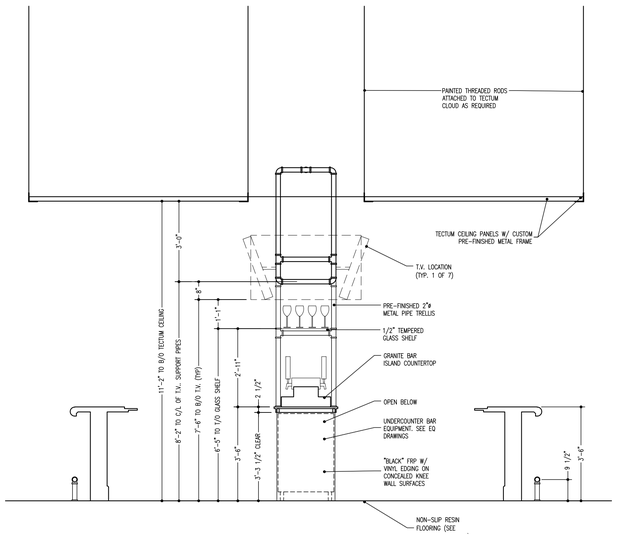

A1 BAR SECTION

SCALE: 3/8"=1'-0"

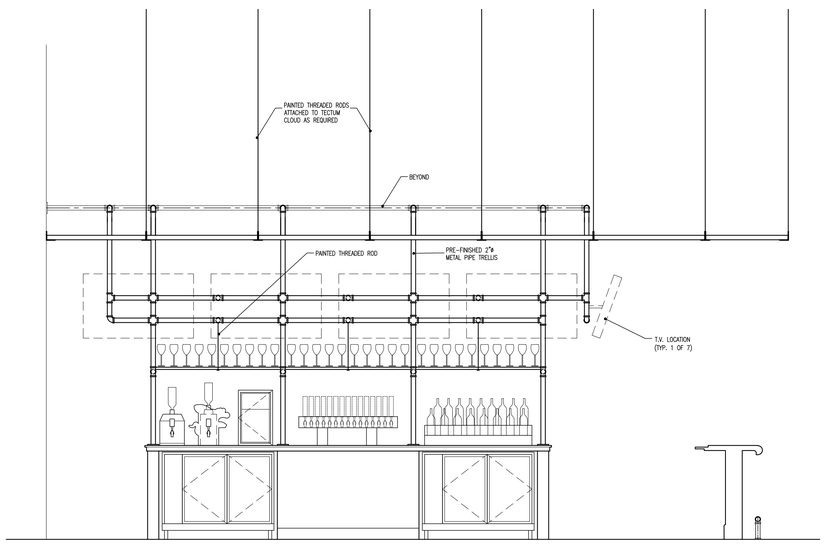

B3 BAR ISLAND ELEVATION

SCALE: 3/8"=1'-0"

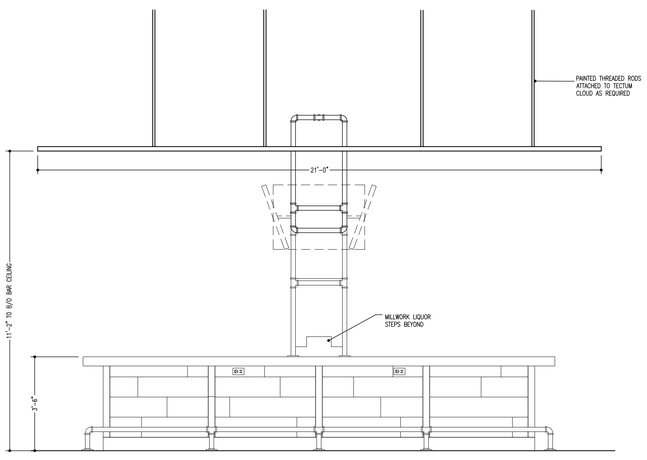

B5 BAR FRONT ELEVATION

SCALE: 3/8"=1'-0"

iA ARCHITECTURE

SMOKEY BONES
UTICA, MI

STATE OF MICHIGAN
JEFF SPIKES
LICENSE NUMBER
13010695
ARCHITECT

JEFF SPIKES, ARCHITECT
LICENSE NO. 1301069572

COPYRIGHT
THESE DOCUMENTS ARE PROTECTED BY UNITED STATES COPYRIGHT LAW. THEY HAVE BEEN PREPARED SPECIFICALLY FOR THE PROJECT IDENTIFIED AND ARE NOT SUITABLE FOR USE ON ANY OTHER PROJECT OR AT ANY OTHER LOCATION WITHOUT THE EXPRESS WRITTEN APPROVAL AND PARTICIPATION OF iARCHITECTURE. REPRODUCTION OF THESE DOCUMENTS MUST BE AUTHORIZED BY THE ARCHITECT. ALL RIGHTS ARE RESERVED TO iARCHITECTURE.

BAR TRELLIS DETAILS

REVISIONS	
NO.	DATE

PROJECT NO: IA 2119

SHEET A9.04

DATE 11/12/21

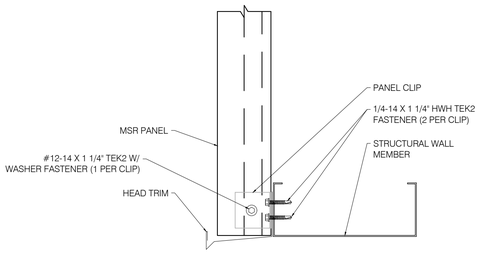

C1 MCELROY METAL HEADER DETAIL

SCALE: 3"=1'-0"

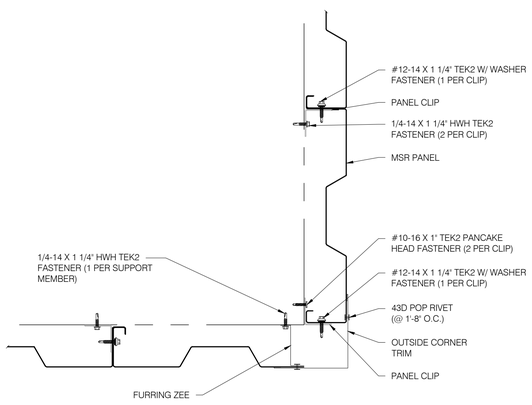

B1 MCELROY METAL OUTSIDE CORNER DETAIL

SCALE: 3"=1'-0"

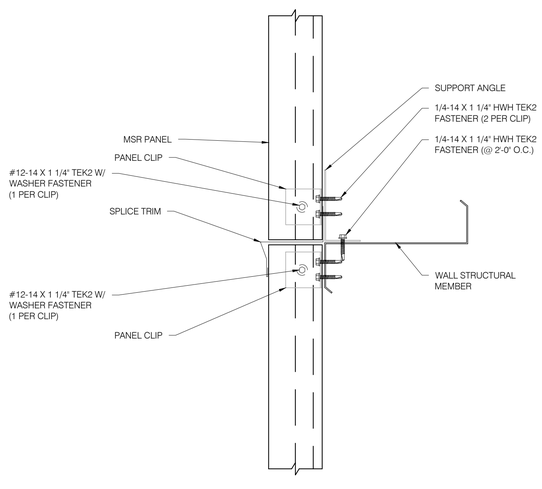

A1 MCELROY METAL WALL SPLICE DETAIL

SCALE: 3"=1'-0"

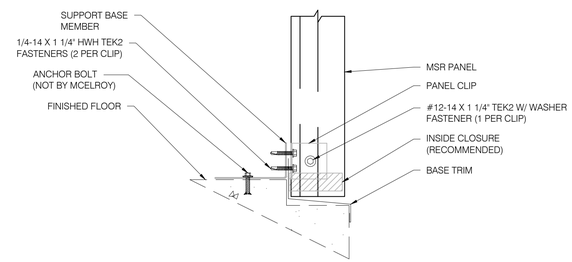

C3 MCELROY METAL BASE DETAIL

SCALE: 3"=1'-0"

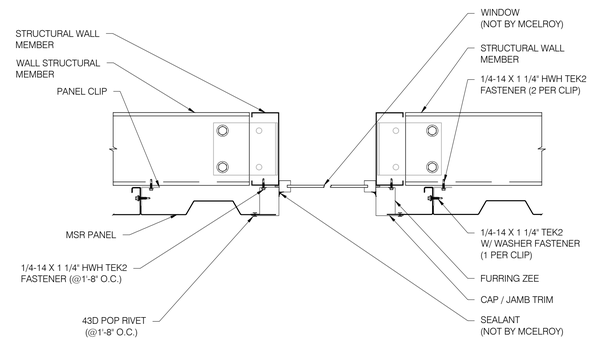

A3 MCELROY METAL WINDOW JAMB DETAIL

SCALE: 1 1/2"=1'-0"

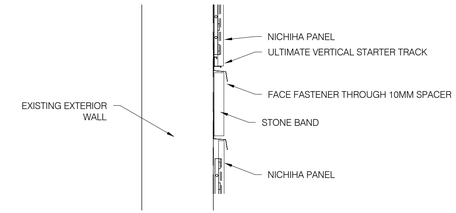

D5 NICHIHA VERTICAL TRANSITION DETAIL

SCALE: 1 1/2"=1'-0"

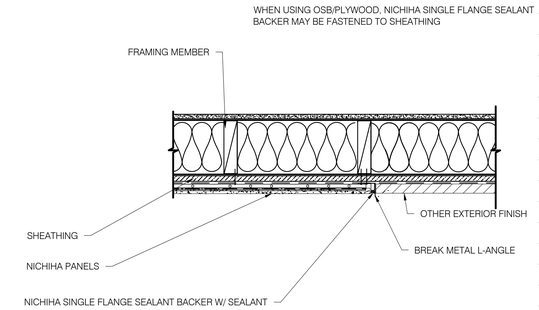

C5 NICHIHA VERTICAL TRANSITION DETAIL

SCALE: 1 1/2"=1'-0"

iA ARCHITECTURE

SMOKEY BONES
UTICA, MI

JEFF SPIKES, ARCHITECT
LICENSE NO. 1301069572

COPYRIGHT
THESE DOCUMENTS ARE PROTECTED BY UNITED STATES COPYRIGHT LAW. THEY HAVE BEEN PREPARED SPECIFICALLY FOR THE PROJECT IDENTIFIED AND ARE NOT SUITABLE FOR USE ON ANY OTHER PROJECT OR AT ANY OTHER LOCATION WITHOUT THE EXPRESS WRITTEN APPROVAL AND PARTICIPATION OF iARCHITECTURE. REPRODUCTION OF THESE DOCUMENTS MUST BE AUTHORIZED BY THE ARCHITECT. ALL RIGHTS ARE RESERVED TO iARCHITECTURE.

FINISH DETAILS

REVISIONS	
NO.	DATE
1	1.27.2022

PROJECT NO: IA 2119

SHEET A9.05

DATE 11/12/21

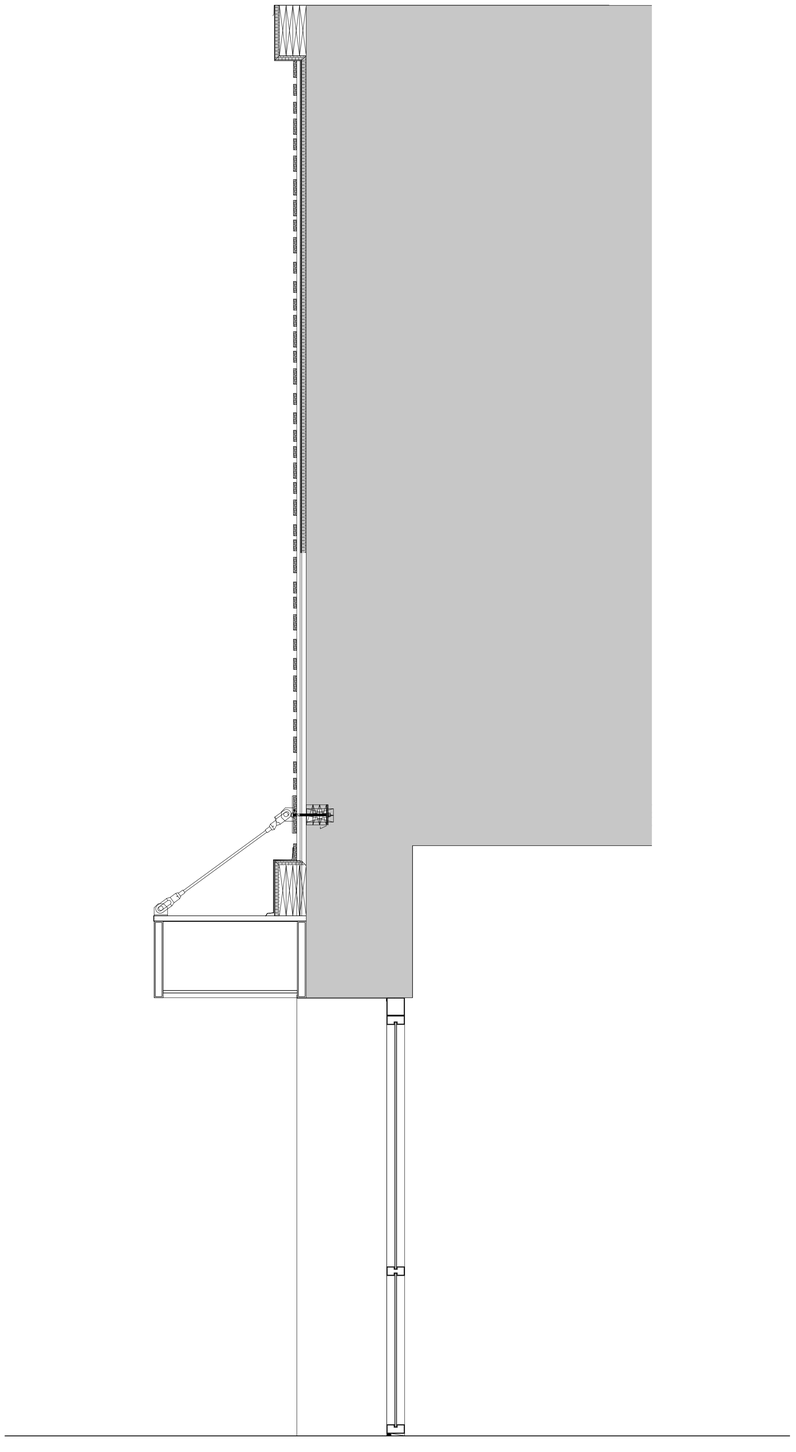

A1 TOWER WALL SECTION

SCALE: 3/4"=1'-0"

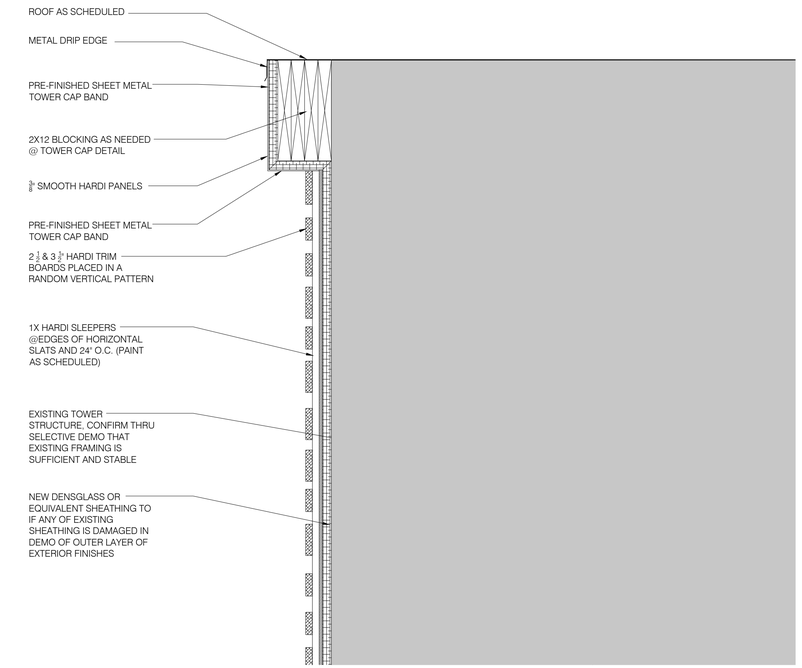

C4 TOWER DETAIL

SCALE: 1 1/2"=1'-0"

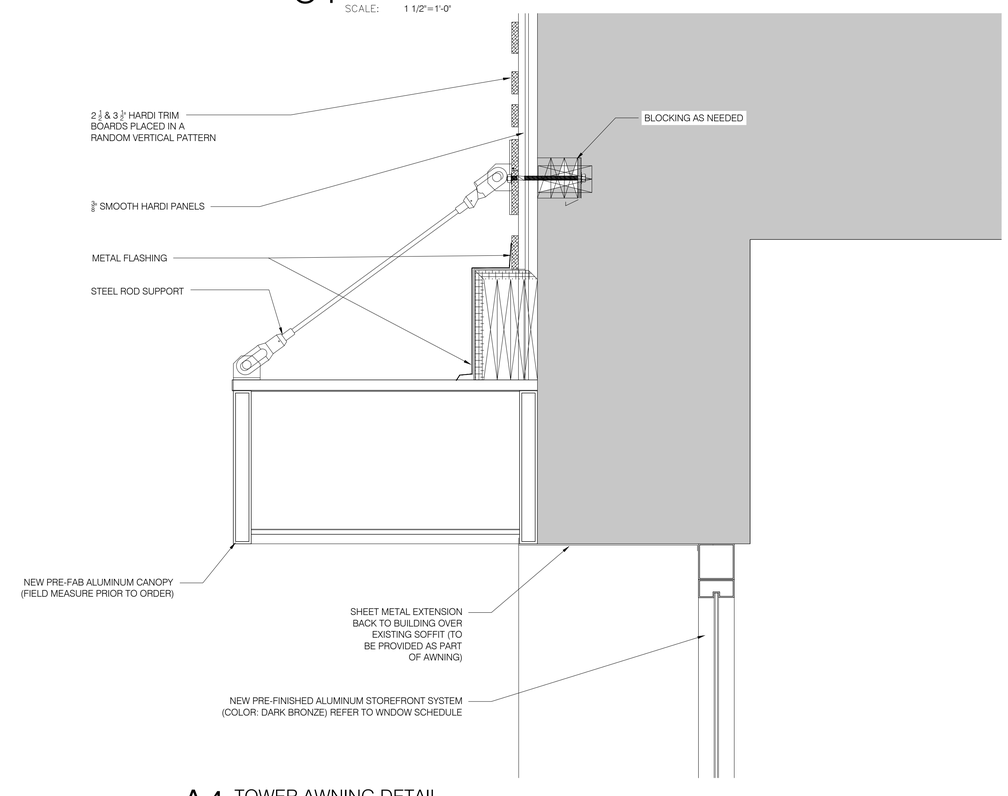

A4 TOWER AWNING DETAIL

SCALE: 1 1/2"=1'-0"

iA ARCHITECTURE

SMOKEY BONES
UTICA, MI

STATE OF MICHIGAN
JEFF SPIKES
NUMBER
1301069572
ARCHITECT

JEFF SPIKES, ARCHITECT
LICENSE NO. 1301069572

COPYRIGHT
THESE DOCUMENTS ARE PROTECTED BY UNITED STATES COPYRIGHT LAW. THEY HAVE BEEN PREPARED SPECIFICALLY FOR THE PROJECT IDENTIFIED AND ARE NOT SUITABLE FOR USE ON ANY OTHER PROJECT OR AT ANY OTHER LOCATION WITHOUT THE EXPRESS WRITTEN APPROVAL AND PARTICIPATION OF iARCHITECTURE. REPRODUCTION OF THESE DOCUMENTS MUST BE AUTHORIZED BY THE ARCHITECT. ALL RIGHTS ARE RESERVED TO iARCHITECTURE.

TOWER
SECTION &
DETAILS

REVISIONS	
NO.	DATE
1	1.27.2022

PROJECT NO:
IA 2119

SHEET
A9.06

DATE 11/12/21

CONCRETE

1. CONCRETE IS NORMAL WEIGHT AND SHALL DEVELOP A MINIMUM COMPRESSIVE STRENGTH OF AT 28 DAYS:
   a. FOUNDATIONS: 3000 PSI
2. CONCRETE BAR REINFORCEMENT SHALL BE NEW BILLET STEEL CONFORMING TO ASTM A615 (60,000 PSI YIELD).
3. WELDED WIRE REINFORCEMENT SHALL CONFORM TO ASTM A-185, AND SHALL BE FURNISHED AND PLACED IN FLAT SHEETS.
4. UNLESS OTHERWISE NOTED, CONCRETE WORK SHALL CONFORM TO THE ACI STANDARD "BUILDING CODE REQUIREMENTS FOR REINFORCED CONCRETE" (ACI 318-14) AND THE ACI "DETAILING MANUAL" (SP-66 2004 EDITION).
5. MINIMUM CONCRETE COVER SHALL BE (UNLESS OTHERWISE NOTED):
   a. UNFORMED SURFACES IN CONTACT WITH GROUND (FOOTING BOTTOMS). 3"
   b. FORMED SURFACES IN CONTACT WITH GROUND OR EXPOSED TO THE WEATHER (GRADE BEAMS, WALLS, ETC.) 2"
   c. IN ALL CASES, CLEARANCE NOT LESS THAN THE DIAMETER OF THE BARS.

   NOTE: MAXIMUM DEVIATION FROM THESE REQUIREMENTS SHALL BE +1/4" FOR SECTIONS TEN (10) INCHES OR LESS AND +1/2" FOR SECTIONS OVER TEN (10) INCHES THICK.

STRUCTURAL STABILITY

1. STRUCTURAL STABILITY IS DEPENDENT ON A FULLY COMPLETED STRUCTURE.
2. THE FULLY COMPLETED STRUCTURE IS DESIGNED TO BE STABLE AND TO RESIST THE CODE PRESCRIBED LATERAL AND GRAVITY FORCES.
   a. "FULLY COMPLETE" INCLUDES, BUT IS NOT LIMITED TO:
      a) BEAMS, COLUMNS IN PLACE AND ARE CONNECTED AS REQUIRED ON THE CONTRACT DOCUMENTS.
3. THE CONTRACTOR IS RESPONSIBLE FOR THE STABILITY OF THE STRUCTURE IN ITS INCOMPLETE STAGE, INCLUDING BUT NOT LIMITED TO:
   a. DETERMINING ERECTION AND PLACING PROCEDURES.
   b. DESIGNING AND PROVIDING TEMPORARY SUPPORTS, SUCH AS TEMPORARY SHORING, BRACING, GUYS AND TIE-DOWNS.
   c. DESIGNING AND PROVIDING SEI/ASCE 37-14, "DESIGN LOADS ON STRUCTURES DURING CONSTRUCTION" AS A REFERENCE TO DETERMINE LOADS FOR TEMPORARY SUPPORTS.

STRUCTURAL STEEL

1. SHOP DETAILS, FABRICATION AND ERECTION OF STRUCTURAL STEEL SHALL CONFORM TO THE REQUIREMENTS OF CURRENT AISC "SPECIFICATION AND ERECTION OF STRUCTURAL STEEL FOR BUILDINGS", AISC "CODE OF STANDARD PRACTICE FOR STEEL BUILDINGS AND BRIDGES", AND AISC "DETAILING FOR STEEL CONSTRUCTION".
2. STRUCTURAL STEEL SHALL CONFORM TO THE YIELD STRENGTH (F_y) LISTED BELOW:
   a. W, WT SHAPES 50 KSI
   b. HSS SQUARE AND RECTANGULAR 46 KSI
   c. HSS ROUND 42 KSI
   d. ALL OTHER PLATES AND SHAPES, U.O.N. 36 KSI
3. ANCHOR RODS SHALL BE ASTM F-1554 GRADE 36 U.O.N.
4. HIGH STRENGTH BOLTS SHALL CONFORM TO "GROUP A" OR "GROUP B" U.O.N. AS OUTLINED BY AISC AND THE RESEARCH COUNCIL ON STRUCTURAL CONNECTIONS
5. ANCHOR RODS, BASE PLATES OR BEARING PLATES SHALL BE LOCATED AND BUILT INTO CONNECTING WORK, PRE-SET BY TEMPLATES OR SIMILAR METHOD. PLATES SHALL BE SET IN FULL BEDS OF NON-SHRINK MORTAR OR GROUT.
6. WELDING SHALL BE DONE WITH APPROPRIATE E70 SERIES ELECTRODES COMPATIBLE WITH THE NEW AND EXISTING STEEL AND SHALL CONFORM TO THE REQUIREMENTS OF THE "CODE FOR WELDING IN BUILDING CONSTRUCTION" OF THE AMERICAN WELDING SOCIETY.
7. NO FIELD MODIFICATION TO THE FABRICATED MEMBER OR CONNECTION IS ALLOWED WITHOUT PRIOR APPROVAL BY THE STRUCTURAL ENGINEER OF THE CONTRACTOR'S SKETCHES OR SHOP DRAWINGS REFLECTING THESE MODIFICATIONS.
8. ANGLES ASSUMED LONG LEG VERTICAL (LLV) UNLESS OTHERWISE NOTED.
9. THE CONTRACTOR IS RESPONSIBLE FOR THE ERECTION SAFETY OF STEEL CONNECTIONS, INCLUDING BUT NOT LIMITED TO: CONFIGURATION, SEQUENCE, USE OF: BLOCKING, EXTENDED CLIP ANGLES, CLAMPS, ETC.

STATEMENT OF DESIGN CERTIFICATION

1. THESE CONSTRUCTION DOCUMENTS WERE PREPARED FOR COMPLIANCE WITH THE 2015 MICHIGAN BUILDING CODE AND ADOPTED DESIGN REFERENCE STANDARDS IN EFFECT AT THE TIME OF PERMIT SUBMITTAL.
2. I HEREBY CERTIFY THE STRUCTURAL DESIGN AND DOCUMENTATION CONTAINED HEREIN WAS PREPARED UNDER MY DIRECT SUPERVISION AS A REGISTERED DESIGN PROFESSIONAL LICENSED IN THE STATE OF MICHIGAN.

   DESIGN PROFESSIONAL IN RESPONSIBLE CHARGE: LAWRENCE E. LESNIAK, PE
   STATE OF MICHIGAN PROFESSIONAL ENGINEERING LICENSE NO: 6201037736
   LICENSE EXPIRATION DATE: APRIL 30, 2023

STATEMENT OF SPECIAL INSPECTION

1. GENERAL
   a. THIS STATEMENT OF INSPECTIONS IS SUBMITTED AS A CONDITION FOR PERMIT ISSUANCE IN ACCORDANCE WITH THE SPECIAL INSPECTION REQUIREMENTS OF THE 2015 MICHIGAN BUILDING CODE.
   b. REFERENCE SPECIFICATION SECTION "SPECIAL INSPECTIONS & TESTING" AND DRAWING SHEET SG-02.

SPECIAL INSPECTIONS & TESTING

1. THE FOLLOWING ITEMS REQUIRE TESTING AND/OR INSPECTION IN ACCORDANCE WITH THE STATEMENT OF SPECIAL INSPECTION, SPECIAL INSPECTION MATRIX LOCATED ON DRAWING SHEET SG-02 AND SPECIFICATIONS.
   a. CAST-IN-PLACE CONCRETE
   b. SOILS AND EARTHWORK
   c. STEEL CONSTRUCTION

SHOP DRAWINGS & SUBMITTALS

1. PROVIDE THE FOLLOWING SHOP DRAWINGS AND SUBMITTALS FOR REVIEW TO THE STRUCTURAL ENGINEER:
   a. TESTING AND INSPECTION REPORTS IN ACCORDANCE WITH PROJECT REQUIREMENTS FOR SPECIAL INSPECTIONS AND TESTING
   b. CONCRETE FOUNDATIONS AND REINFORCING SHOP DRAWINGS
   c. COLUMN ANCHOR BOLT SHOP DRAWINGS
   d. STRUCTURAL STEEL SHOP DRAWINGS

GENERAL

1. THE STRUCTURAL DRAWINGS SHOW A PORTION OF THE WORK TO BE PERFORMED BY THE CONTRACTOR.
2. THESE NOTES ARE COMPLEMENTARY TO THE SPECIFICATIONS AND SHALL BE USED IN CONJUNCTION WITH THE SPECIFICATIONS.
3. SPECIFICATIONS AND DRAWINGS SHALL BE EQUAL IN AUTHORITY AND PRIORITY. SHOULD THE SPECIFICATIONS AND DRAWINGS DISAGREE IN THEMSELVES, OR WITH EACH OTHER, CONSTRUCTION SHALL BE BASED ON THE MOST STRINGENT. THE WORK REQUIRED TO BE CONSTRUCTED BY THE DOCUMENTS SHALL BE DECIDED BY THE STRUCTURAL ENGINEER IN THE EVENT OF THE ABOVE MENTIONED DISAGREEMENTS.
4. VERIFY THE SIZES, LOCATIONS, ELEVATIONS AND DETAILS OF EXISTING CONDITIONS THAT AFFECT THE WORK. INFORM THE STRUCTURAL ENGINEER OF ANY DISCREPANCIES IN DIMENSIONS, SIZES, LOCATIONS, AND CONDITIONS. PROCEEDING WITH WORK ONLY AFTER DISCREPANCIES ARE RESOLVED.
5. PROVIDE SHORING, BRACING, UNDERPINNING, AND ANY OTHER MEANS REQUIRED TO PROTECT AND MAINTAIN THE SAFETY, INTEGRITY AND STABILITY OF ALL EXISTING AND NEW CONSTRUCTION.
6. THE CONTRACTOR SHALL FAMILIARIZE HIMSELF WITH THE EXISTING CONDITIONS AT THE SITE, INCLUDING UTILITIES, SERVICES, ETC., AND SHALL BE FULLY RESPONSIBLE FOR ANY DAMAGE HE CAUSES TO THE PROPERTY, EXISTING AND NEW CONSTRUCTION, AND FOR ANY UNAUTHORIZED DISRUPTIONS TO THE OWNER'S NORMAL USE OF UTILITIES, SERVICES AND THE SURROUNDING FACILITIES.
7. CONTRACTOR SHALL OBTAIN APPROVAL OF THE STRUCTURAL ENGINEER PRIOR TO PLACING OPENINGS OR SLEEVES NOT SHOWN ON DRAWINGS THROUGH ANY STRUCTURAL MEMBERS.
8. TYPICAL DETAILS APPLY TO ALL DRAWINGS AND SHALL BE USED EXCEPT WHERE OTHERWISE SHOWN OR NOTED.

FOUNDATIONS

1. THE FOUNDATION DESIGN IS BASED ON A SOIL BEARING CAPACITY OF 1,500 PSF.
2. FOOTINGS SHALL BE CARRIED DOWN TO UNDISTURBED SOIL HAVING A MINIMUM NET ALLOWABLE BEARING CAPACITY OF 1,500 POUNDS PER SQUARE FOOT AT MINIMUM DEPTHS NECESSARY TO ACHIEVE FROST PROTECTION.
3. REQUIRED SITE DEMO AND EARTHWORK.
   a. INSPECT EXPOSED SUBGRADE WITH GEOTECHINCAL ENGINEER TO DETERMINE ITS SUITABILITY IN PLACE.
   b. NO FOOTINGS SHALL BE PLACED IN WATER.
4. FINISHED EXCAVATIONS AND BEARING GRADES SHALL BE INSPECTED AND APPROVED BY THE GEOTECHNICAL INSPECTION AGENCY BEFORE ANY CONCRETE IS PLACED.
5. THE EXPOSED SUBGRADE SOILS ARE SENSITIVE TO DISTURBANCE. CONSTRUCTION TRAFFIC OVER EXPOSED FOUNDATION SUBGRADES SHALL BE AVOIDED.

STRUCTURAL DESIGN LOADS

1. DESIGN CODE MICHIGAN BUILDING CODE 2015

   DESIGN LOAD COMBINATIONS PER ASCE 7-10 SECTION 2.3 & 2.4 & MBC SECTION 1605
2. ROOF LIVE LOADS (UNFACTORED)
   a. GROUND SNOW LOAD, "P_g" 25 PSF
   b. MINIMUM FLAT ROOF DESIGN SNOW LOAD 20 PSF
   c. RISK CATEGORY II
   d. SNOW EXPOSURE FACTOR, "C_e" 1.00
   e. SNOW THERMAL FACTOR, "C_t" 1.00
   f. SNOW LOAD IMPORTANCE FACTOR, "I_s" 1.00
3. LIVE LOAD DEFLECTION
   a. ROOF MEMBERS HAVE BEEN DESIGNED TO ACCOMMODATE A LIVE LOAD DEFLECTION OF L/360 (FACADE ATTACHMENTS INCLUDING, BUT NOT LIMITED TO, ALUMINUM STOREFRONT AND ALUMINUM CURTAIN WALL SYSTEMS SHALL BE DESIGNED TO ACCOMMODATE DEFLECTION OF THE PRIMARY STRUCTURE AS OUTLINED ABOVE)
5. SUPERIMPOSED DEAD LOADS (UNFACTORED)
   a. TYPICAL ROOF:
      a) ROOFING ASSEMBLY 15 PSF
6. ULTIMATE DESIGN WIND LOAD
   a) LATERAL LAOD CAPACITY OF THE STRUCTURAL WAS NOT AFFECTED BY THE COLUMN RELOCATION.
7. SEISMIC LOADS
   a) LATERAL LOAD CAPACITY OF THE STRUCTURAL WAS NOT AFFECTED BY THE COLUMN RELOCATION

STRUCTURAL DRAWING INDEX

SHEET NUMBER	SHEET NAME
SG-01	General Notes
SG-02	Special Inspections & Testing
SG-03	Specifications
SP-01	Foundation Plan
SP-02	Roof Framing Plan
S5-01	Sections

STATE OF MICHIGAN
LAWRENCE E. LESNIAK
NO. 37736
LICENSED PROFESSIONAL ENGINEER

REVISION	DATE	BY	DESCRIPTION
1	10-25-2021	LL	Permits

General Notes

SMOKEY BONES
45011 SCHOENHERR
UTICA, MI 48315

efi global
EFI Global of Michigan, LLC
8911 Grand River, Brighton, MI 48116
P: (586) 868-0220 ★ www.efiglobal.com

EFI FILE NUMBER
016.03857

PROFESSIONAL ARCHITECTS
PROFESSIONAL ENGINEERS
PROFESSIONAL SURVEYORS
22556 GRATIOT AVENUE
EASTPOINTE, MI 48021
(586) 772-2222 PHONE
(586) 772-4048 FAX
KEM-TEC & ASSOCIATES

72 HOURS
(3 WORKING DAYS)
BEFORE YOU DIG
CALL MISS DIG
800-482-7171
(TOLL FREE)

DRAWN BY: L. LESNIAK
SCALE: AS NOTED
DATE: 10/25/2021
PROJECT NO: 21-02333

SHEET NO:
SG-01

1705.2 - REQUIRED VERIFICATION AND INSPECTION OF STRUCTURAL STEEL & METAL DECK

INSPECTION TASK	FREQUENCY OF INSPECTION: CONTINUOUS	FREQUENCY OF INSPECTION: PERIODIC	REFERENCED STANDARD	RESPONSIBLE AGENT
1. Material verification of structural steel and cold-formed steel deck:				SI,PE
a. For structural steel, identification markings to conform to AISC 360.		X	AISC 303, Section 5	
b. For other steel, identification markings to conform to ASTM standards specified in the approved construction documents.		X	Applicable ASTM material standards	
c. Manufacturers' certified mill test reports.		X		
2. Inspection tasks prior to welding:			AISC 360, AWS D1.1	SI, PE
a. Welding procedure specifications (WPSs) available.	X			
b. Manufacturer certifications for welding consumables available.	X			
c. Material identification (type/grade).		X		
d. Welding procedure specifications (WPSs) available including identification of welder who has welded each joint.		X		
e. Check welding equipment.		X		
3. Inspection tasks during welding:			AISC 360, AWS D1.1	SI, PE
a. Use of qualified welders.		X		
b. Control and handling of welding consumables:				
1) Packaging.		X		
2) Exposure control.		X		
c. No welding over cracked tack welds.		X		
d. Environmental conditions:				
1) Wind speed within limits.		X		
2) Precipitation and temperature.		X		
e. Welding procedure specifications (WPSs) followed:				
1) Settings on welding equipment.		X		
2) Travel speed.		X		
3) Selected welding materials.		X		
4) Shielding gas type/flow rate.		X		
5) Preheat applied.		X		
6) Interpass temperature maintained (min/max).		X		
7) Proper position (F,V,H, OH).		X		
f. Welding techniques:				
1) Interpass and final cleaning.		X		
2) Each pass within profile limitations.		X		
3) Each pass meets quality requirements.		X		
4. Inspection tasks after welding:			AISC 360, AWS D1.1	SI, PE
a. Welds cleaned.		X		
b. Size, length and location of welds.	X			
c. Welds meet visual acceptance criteria:				
1) Crack prohibition.	X			
2) Welds/base metal fusion.	X			
3) Crater cross section.	X			
4) Weld profile.	X			
5) Weld Size.	X			
6) Undercut.	X			
7) Porosity.	X			
d. Repair activities.	X			
e. Document acceptance or rejection of welded joints or members.	X			
5. Inspection tasks prior to bolting:			AISC 360, RCSC	SI, PE
a. Manufacturers certifications available for fastener materials.	X			
b. Fasteners marked in accordance with ASTM requirements.		X		
c. Proper fastener selected for joint details.		X		
d. Proper bolting procedure selected for joint detail.		X		
e. Connecting elements, including the appropriate faying surface condition and hole preparation, if specified, meet applicable requirements.		X		
f. Pre-installation verification testing by installation personnel observed and documented for fastener assemblies and methods used.		X		
g. Proper storage provided for bolts, nuts, washers, and other fastening components.		X		
6. Inspection tasks during bolting:			AISC 360, RCSC	SI, PE
a. Fastener assemblies, of suitable condition, placed in all holes and washers (if required) are positioned as required.		X		
7. Inspection tasks after bolting:			AISC 360, RCSC	SI, PE
a. Document acceptance or rejection of bolted connections.	X			
8. Inspection Anchor Rods:			AISC 360	SI,PE
a. Verify anchor rod projection to engage nut.		X		
b. Inspect base plate for grouting of over sized holes.		X		
c. Inspect base plate welding of plate washers.		X		
9. Miscellaneous				SI,PE
a. Verify metal floor & roof deck primary support & sidelap fasteners.		X	SDI, Fastener ES Reports, Manufacturers Inspection Criteria, AWS D1.3	

SPECIAL INSPECTION LEGEND & NOTES

1. Special inspections shall be performed in accordance with 2015 Michigan Building Code Chapter 17 and as modified herein.
2. SI: Special Inspector meeting the minimum qualification requirements to perform the indicated special inspection services. Shall demonstrate competence documented by certifications from recognized agencies and approved by the Building Official Having Jurisdiction.
3. PE: Registered Professional Engineer licensed in the State of Michigan meeting the minimum qualification requirements to perform the indicated special inspection service and approved by the Building Official Having Jurisdiction.
4. GEOR: The geotechnical engineer of record who provided the original project geotechnical soils investigation report and meets the minimum qualification requirements to perform the indicated special inspection service and approved by the Building Official Having Jurisdiction.
5. GEOR shall submit records of the inspection results to the SI. The SI shall compile and submit inspection records to the Architect/Engineer of Record and Building Official. Records shall include statements of tests, whether installed/fabricated item complies with contract documents, remedial work performed, retests.
6. Special Inspectors performing inspection services shall refer to and familiarize themselves with the Contract Documents, approved submittals, RFI responses, and field directives related to the work being inspected.
7. SI shall develop and maintain a list of each reported discrepancy and suggested remedial action. It shall list method of how discrepancy was resolved and when the remedial action is performed.
8. The Special Inspection Agency and/or Special Inspector shall be paid by the Owner or the registered design professional in responsible charge acting as the Owner's agent, in compliance with the Michigan Building Code.
9. Refer to the Michigan Building Code Chapter 35 for current reference standard editions.
10. Refer to the International Code Council Special Inspection Manual 2012 Edition for additional information.

1705.6 - REQUIRED VERIFICATION AND INSPECTION OF SOILS

INSPECTION TASK	FREQUENCY OF INSPECTION: CONTINUOUS	FREQUENCY OF INSPECTION: PERIODIC	REFERENCED STANDARD	RESPONSIBLE AGENT
1. Verify materials below footings are adequate to achieve the design bearing capacity.		X		GEOR,SI,PE
2. Verify excavations are extended to proper depth and have reached proper material.		X		

1705.3 - REQUIRED VERIFICATION AND INSPECTION OF CONCRETE CONSTRUCTION

INSPECTION TASK	FREQUENCY OF INSPECTION: CONTINUOUS	FREQUENCY OF INSPECTION: PERIODIC	REFERENCED STANDARD	RESPONSIBLE AGENT
1. Inspection of reinforcing steel and placement.		X	ACI 318: Ch. 20, 25.2, 25.3, 26.6.1-26.6.3	SI,PE
2. Inspect bolts to be installed in concrete prior to and during placement of concrete.	X		ACI 318: 17.8.2	SI,PE
3. Inspection of anchors installed in hardened concrete. (Refer to 1705.1 P.I. Anchors)		X	ACI 318: 17.8.2	SI,PE
4. Verifying use of approved concrete mix designs.		X	ACI 318: Ch. 19, 26.4.3-26.4.4	SI,PE
5. At the time fresh concrete is sampled to fabricate specimens for strength tests, perform slump and air content tests, and determine the temperature of the concrete.	X		ASTM C 172 ASTM C 31 ACI 318: 26.4, 26.12	SI,PE
6. Inspection of concrete for proper application techniques.	X		ACI 318: 26.5	SI,PE
7. Inspection of vapor retarder surface for complete moisture removal prior to placement of concrete.		X		SI,PE
8. Inspection for maintenance of specified curing temperature and techniques.		X	ACI 318: 26.5.3-26.5.5	SI,PE
9. Inspect formwork for shape, location and dimensions of the concrete member being formed.		X	ACI 318: 26.11.1.2(b)	SI,PE

SPECIAL INSPECTIONS & TESTING SPECIFICATIONS

1. THE OWNER SHALL EMPLOY ONE OR MORE APPROVED INDEPENDENT TESTING AGENCIES TO PERFORM INSPECTIONS DURING CONSTRUCTION ON THE TYPES OR WORK LISTED UNDER MBC 2015 SECTION 1705 AND THE CONTRACT DOCUMENTS.

2. MATERIALS, SYSTEMS, COMPONENTS, AND WORK AS PART OF DELEGATED DESIGNS OR DELEGATED SYSTEMS ARE REQUIRED TO HAVE SPECIAL INSPECTIONS IN ACCORDANCE WITH THIS SECTION.
   a. EXAMPLE: ANCHORAGE OF NON-STRUCTURAL COMPONENTS RELATED TO ARCHITECTURAL, MECHANICAL, ELECTRICAL, AND FIRE SUPPRESSION.

3. RELATED DOCUMENTS:
   a. SPECIAL INSPECTION AND TESTING MATRIX SHOWN ON CONTRACT DRAWINGS.
   b. INTERNATIONAL ACCREDITATION SERVICES, INC. ACCREDITATION CRITERIA FOR SPECIAL INSPECTION AGENCIES, AC291 DATED JUNE 2013.
   c. ACI MANUAL OF CONCRETE PRACTICE LATEST ADDITION FOR TESTING AND INSPECTION OF CONCRETE MATERIALS AND PROCEDURES.
   d. TMS 402-14/ACI 530-14/ASCE 5-14 "BUILDING CODE REQUIREMENTS AND SPECIFICATION FOR MASONRY STRUCTURES" FOR TESTING AND INSPECTION OF MASONRY MATERIALS AND PROCEDURES.
   e. TMS 602-14/ACI 530.1-14/ASCE 6 QUALITY ASSURANCE PROGRAM REQUIREMENTS.
   f. AISC 360-10 "SPECIFICATION FOR STRUCTURAL STEEL BUILDINGS", INCLUDING "COMMENTARY" AND SUPPLEMENTS THERE TO ISSUED FOR TESTING AND INSPECTION OF STEEL MATERIALS AND PROCEDURES.
   g. RCSC DECEMBER 31, 2009 "SPECIFICATIONS FOR STRUCTURAL JOINTS USING HIGH-STRENGTH BOLTS" FOR TESTING AND INSPECTION OF BOLTING MATERIALS, CONNECTIONS, AND PROCEDURES.
   h. AWS D1.1 - 2010 "STRUCTURAL WELDING CODE" FOR TESTING AND INSPECTION OF WELD MATERIALS AND PROCEDURES.

4. ACTION SUBMITTALS:
   a. DAILY REPORTS: THE INDEPENDENT TESTING AGENCY SHALL SUBMIT WITHIN 10 CALENDAR DAYS, A CERTIFIED REPORT OF EACH INSPECTION, TEST OR SIMILAR SERVICE.
   b. EXCEPTION: IF THE TESTING/INSPECTION ACTIVITY IS FOUND TO BE NOT IN COMPLIANCE WITH THE CONTRACT DOCUMENTS, THE CONTRACTOR SHALL BE NOTIFIED IMMEDIATELY.
   c. IF THE CONTRACTOR IS UNABLE TO COMPLY WITH REQUIRED CORRECTIONS IN A TIMELY MANNER, OR IF THE STRUCTURAL ENGINEER IS REQUIRED TO PROVIDE DIRECTION, A WRITTEN REPORT SHALL BE IN THE STRUCTURAL ENGINEER'S AND CONTRACTOR'S OFFICES NO LATER THAN 9:00 A.M., LOCAL TIME, THE FOLLOWING MORNING.
   d. PROVIDE PHOTOGRAPHS OF THE DISCREPANCY AND THE SPECIFIC LOCATION THEREOF.
   e. IF DELIVERED BY ELECTRONIC MAIL OR FAX, THE DOCUMENT SHALL BE CLEARLY MARKED OR FLAGGED THAT A DISCREPANCY HAS OCCURRED.
   f. ATTACH A COPY OF PHOTOGRAPH(S) FOR EACH ITEM NOT IN COMPLIANCE.
   g. RETEST REPORTS: REPORTS FOR ITEMS THAT ARE RETESTED SHALL BE CLEARLY MARKED OR FLAGGED.
   h. SUBMIT ONE COPY OF THE REPORTS TO THE OWNER, TO THE ARCHITECT, TO THE STRUCTURAL ENGINEER, TO THE CONTRACTOR, AND TO THE BUILDING OFFICIAL HAVING JURISDICTION.

5. INSPECTION REPORTS ISSUED BY THE INDEPENDENT TESTING AGENCY SHALL ACCURATELY AND CLEARLY OUTLINE THE RESULTS OF THE SPECIAL INSPECTIONS AND TESTING. INSPECTION REPORTS SHALL COMPLY WITH THE REPORTING REQUIREMENTS OF MBC 2015, CHAPTER 17 AND CONTAIN THE FOLLOWING MINIMUM INFORMATION, AS APPLICABLE:
   a. INSPECTION DATE, AND ARRIVAL AND DEPARTURE TIMES (OR TOTAL DURATION ON-SITE) OF THE INSPECTOR.
   b. REPORT NUMBER.
   c. STRUCTURAL ENGINEERS PROJECT TITLE.
   d. STRUCTURAL ENGINEERS PROJECT NUMBER.
   e. NAME, ADDRESS AND TELEPHONE NUMBER OF INDEPENDENT TESTING AGENCY.
   f. DATES AND LOCATIONS OF SAMPLES AND TESTS OR INSPECTIONS.
   g. NAMES OF INDIVIDUALS MAKING THE INSPECTION OR TEST.
   h. DESIGNATION OF THE WORK AND TEST METHOD.
   i. IDENTIFICATION OF PRODUCT AND/OR TEST.
   j. COMPLETE INSPECTION OR TEST DATA.
   k. TEST RESULTS AND AN INTERPRETATION OF TEST RESULTS.
   l. AMBIENT CONDITIONS AT THE TIME OF SAMPLE-TAKING AND TESTING.
   m. PROFESSIONAL EVALUATION AS TO WHETHER INSPECTED OR TESTED WORK COMPLIES WITH CONTRACT DOCUMENT REQUIREMENTS, INCLUDING REFERENCED CODES.
   n. NAME AND SIGNATURE OF LABORATORY INSPECTOR.
   o. RECOMMENDATIONS ON RETESTING.

6. FINAL REPORT AND CERTIFICATION:
   a. A FINAL REPORT DOCUMENTING REQUIRED SPECIAL INSPECTIONS AND/OR TESTING ALONG WITH CORRECTION OF ANY DISCREPANCIES NOTED IN THE INSPECTIONS SHALL BE SUBMITTED BY THE INDEPENDENT TESTING AGENCY UPON SUBSTANTIAL COMPLETION OF THE WORK BEING PERFORMED.
   b. THE FINAL REPORT SHALL INDICATE THE WORK INSPECTED WAS OR WAS NOT COMPLETED IN CONFORMANCE WITH THE CONSTRUCTION DOCUMENTS AND SHALL BEAR THE SIGNATURE OF THE RESPONSIBLE PROFESSIONAL ENGINEER OF THE AGENCY.

7. RESPONSIBILITIES OF INDEPENDENT TESTING AGENCY AND SPECIAL INSPECTOR:
   a. SUBMIT INSPECTION REPORTS, AND FINAL REPORT AND CERTIFICATION AS OUTLINED UNDER ACTION SUBMITTALS.
   b. PROVIDE SPECIAL INSPECTIONS DURING CONSTRUCTION ON THE TYPES OR WORK LISTED UNDER MBC 2015 SECTION 1705 AND THE CONTRACT DOCUMENTS.
   c. SPECIAL INSPECTOR PERFORMING INSPECTION SERVICES SHALL REVIEW CONTRACT DOCUMENTS RELATED TO WORK BEING INSPECTED AND FAMILIARIZE THEMSELVES WITH THE CONTRACT DOCUMENTS REQUIREMENTS PRIOR COMMENCEMENT OF CONSTRUCTION.
   d. SPECIAL INSPECTOR PERFORMING INSPECTION SERVICES SHALL REVIEW APPROVED SUBMITTALS RELATED TO WORK BEING INSPECTED AND FAMILIARIZE THEMSELVES WITH THE CONTENTS AND REVIEW COMMENTS CONTAINED WITHIN THE SUBMITTAL PRIOR TO THE COMMENCEMENT OF CONSTRUCTION.
   e. SPECIAL INSPECTOR PERFORMING INSPECTION SERVICES SHALL REVIEW RFI RESPONSES RELATED TO WORK BEING INSPECTED AND PROVIDE WRITTEN CONFIRMATION THE REQUIREMENTS OF THE RFI RESPONSE ARE FOLLOWED.
   f. INDEPENDENT TESTING AGENCY SHALL DEVELOP AND MAINTAIN A LIST OF EACH REPORTED DISCREPANCY AND SUGGESTED REMEDIAL ACTION. IT SHALL LIST METHOD OF HOW DISCREPANCY WAS RESOLVED AND WHEN THE REMEDIAL ACTION IS PERFORMED.
   g. SUBMIT COPY OF DISCREPANCY LIST ALONG WITH EACH SUBMISSION OF TESTING REPORTS.

SPECIAL INSPECTIONS & TESTING SPECIFICATIONS CONTINUED

8. QUALIFICATION STANDARDS FOR SPECIAL INSPECTIONS:
   a. INDEPENDENT TESTING AGENCY SHALL PROVIDE TESTING PERSONAL WITH MINIMUM QUALIFICATIONS AS OUTLINED HEREIN. THE REQUIREMENTS FOR THE RESPONSIBLE AGENT ARE INDICATED IN THE SPECIAL INSPECTION AND TESTING MATRIX CONTAINED WITHIN THE CONTRACT DOCUMENTS. THE MINIMUM QUALIFICATIONS FOR SPECIAL INSPECTORS LISTED BELOW ARE DERIVED FROM THE INTERNATIONAL ACCREDITATION SERVICE'S "ACCREDITATION CRITERIA FOR THE IBC SPECIAL INSPECTION AGENCIES" AC291, §6.0 MINIMUM QUALIFICATIONS FOR SPECIAL INSPECTORS.
   b. INDEPENDENT TESTING AGENCY QUALIFICATION STANDARDS:
      1) AN AGENCY THAT MAINTAINS IAS CURRENT ACCREDITATION WITH THE SCOPE OF ACCREDITATION COVERING THE DISCIPLINES FOR WHICH THE AGENCY IS DESIGNATED.
      2) AN AGENCY THAT MEETS THE REQUIREMENTS OF SECTION 1703.1 OF MBC 2015. THE RESPONSIBLE PROFESSIONAL ENGINEER OF THE AGENCY SHALL PROVIDE ALL DOCUMENTATION AS NECESSARY FOR THE BUILDING OFFICIAL HAVING JURISDICTION TO DETERMINE IF THE AGENCY MEETS THE APPLICABLE CODE REQUIREMENTS.
      3) AN AGENCY THAT HAS BEEN ACCREDITED BY AN APPROVED INSPECTION AGENCY IN ACCORDANCE WITH ISO/IEC 17020.

9. SPECIAL INSPECTOR IN TRAINING (SIIT):
   a. AN INSPECTOR WHO DOES NOT MEET THE QUALIFICATIONS FOR A SPECIAL INSPECTOR MAY BE ALLOWED TO PERFORM A "SPECIAL INSPECTION" AT THE DISCRETION OF THE SPECIAL INSPECTION AGENCY'S RESPONSIBLE PROFESSIONAL ENGINEER, PROVIDED THE FOLLOWING CONDITION IS MET:
   b. THE INDIVIDUAL IS WORKING UNDER THE DIRECT ON-SITE AND CONTINUOUS SUPERVISION OF A SPECIAL INSPECTOR FULLY QUALIFIED FOR THE TYPE OF WORK INVOLVED.

SPECIAL INSPECTIONS & TESTING SPECIFICATIONS CONTINUED

10. TESTING LABS QUALIFICATION STANDARDS:
   a. EACH DESIGNATED TESTING LAB SHALL BE ACCREDITED BY ONE OF THE FOLLOWING MAJOR ACCEPTABLE ACCREDITATION AUTHORITIES:
      1) IAS ACCREDITATION WITH THE SCOPE OF ACCREDITATION COVERING THE DISCIPLINES FOR WHICH THE TESTING LAB IS DESIGNATED.
      2) AASHTO ACCREDITATION PROGRAM PER EITHER AASHTO R18 OR ISO/IES 17250.
      3) AMERICAN ASSOCIATION OF LABORATORY ACCREDITATION.
      4) ACCREDITED BY A THIRD PARTY AND SHALL MEET THE REQUIREMENTS OF SECTION 1703.1 OF MBC 2015.

11. MINIMUM QUALIFICATIONS FOR SPECIAL INSPECTORS:
   a. MINIMUM QUALIFICATIONS OF RESPONSIBLE INSPECTION AGENT INDICATED IN THE SPECIAL INSPECTION AND TESTING SERVICES MATRIX. ONE OR A COMBINATION OF THE FOLLOWING SHALL BE PROVIDED:
      1) SI - SPECIAL INSPECTOR MEETING THE MINIMUM QUALIFICATION REQUIREMENTS TO PERFORM THE INDICATED SPECIAL INSPECTION SERVICES. SHALL DEMONSTRATE COMPETENCE DOCUMENTED BY CERTIFICATIONS FROM RECOGNIZED AGENCIES AND APPROVED BY THE BUILDING OFFICIAL HAVING JURISDICTION.
      2) PE - REGISTERED PROFESSIONAL ENGINEER LICENSED IN THE STATE OF MICHIGAN MEETING THE MINIMUM QUALIFICATION REQUIREMENTS TO PERFORM THE INDICATED SPECIAL INSPECTION SERVICE AND APPROVED BY THE BUILDING OFFICIAL HAVING JURISDICTION.
      3) GEOR - THE GEOTECHNICAL ENGINEER OF RECORD WHO PROVIDED THE ORIGINAL PROJECT GEOTECHNICAL SOILS INVESTIGATION REPORT AND MEETS THE MINIMUM QUALIFICATION REQUIREMENTS TO PERFORM THE INDICATED SPECIAL INSPECTION SERVICE AND APPROVED BY THE BUILDING OFFICIAL HAVING JURISDICTION.

STATE OF MICHIGAN
LAWRENCE E. LESNIAK
NO. 37736
LICENSED PROFESSIONAL ENGINEER

REVISION	DATE	BY	DESCRIPTION
1	10-25-2021	LL	Permits

Special Inspections & Testing

SMOKEY BONES

45011 SCHOENHERR
UTICA, MI 48315

efi global
EFI Global of Michigan, LLC
2855 Coolidge Hwy., Suite 216 • Troy, MI 48084
P: (586) 868-0220 • www.efiglobal.com

EFI FILE NUMBER
016.03857

KEM-TEC & ASSOCIATES
PROFESSIONAL ARCHITECTS
PROFESSIONAL ENGINEERS
PROFESSIONAL SURVEYORS
22556 GRATIOT AVENUE
EASTPOINTE, MI 48021
(586)772-2222 PHONE
(586)772-4048 FAX

72 HOURS
(3 WORKING DAYS)
BEFORE YOU DIG
CALL MISS DIG
800-482-7171
(TOLL FREE)

DRAWN BY: L. LESNIAK
SCALE: AS NOTED
DATE: 10/25/2021
PROJECT NO: 21-02333

SHEET NO:
SG-02

STRUCTURAL STEEL SPECIFICATIONS CONTINUED

12. SHOP FABRICATION AND ASSEMBLY:
    a. FABRICATE AND ASSEMBLE STRUCTURAL ASSEMBLIES IN SHOP TO GREATEST EXTENT POSSIBLE. FABRICATE ITEMS OF STRUCTURAL STEEL IN ACCORDANCE WITH AISC SPECIFICATIONS AND AS INDICATED ON APPROVED SHOP DRAWINGS.
    b. BOLTED CONNECTIONS:
        1) INSTALL THREADED FASTENERS IN ACCORDANCE WITH AISC "SPECIFICATIONS.
        2) FOR STRUCTURAL JOINTS USING ASTM A 325 OR A 490 BOLTS".
        3) CUT, DRILL, OR PUNCH HOLES PERPENDICULAR TO METAL SURFACES. DO NOT FLAME-CUT HOLES OR ENLARGE HOLES BY BURNING. DRILL HOLES IN BEARING PLATES. REMOVE BURRS FROM FAYING SURFACES OF BEARING-TYPE CONNECTIONS. THE USE OF BURNT HOLES FOR BOLTED CONNECTIONS IS PROHIBITED. VIOLATION OF THIS CLAUSE WILL BE SUFFICIENT CAUSE FOR THE REJECTION OF THE WHOLE MEMBER INTO WHICH SUCH HOLES WERE BURNT.
    c. WELDED CONNECTIONS:
        1) COMPLY WITH AWS CODE FOR PROCEDURES, APPEARANCE AND QUALITY OF WELDS, AND METHODS USED IN CORRECTING WELDING WORK.
        2) NO WELDS SHALL BE APPLIED TO FLANGES OF TENSION MEMBERS PERPENDICULAR TO THE DIRECTION OF STRESS.
        3) TURN SIDE AND END FILLET WELDS AROUND CORNERS FOR A MINIMUM LENGTH OF TWICE THE NOMINAL SIZE OF THE WELD. TO ASSURE COMPLIANCE, DETAIL SHALL BE INDICATED ON SHOP DRAWINGS. LENGTH OF END RETURNS ARE NOT TO BE INCLUDED IN THE CALCULATED WELDED LENGTH.
        4) PARTS TO BE JOINED SHALL BE BROUGHT INTO CONTACT AS CLOSE AS POSSIBLE. IF THE SEPARATION EXCEEDS 1/16 INCH, THE SIZE OF THE WELD SHALL BE INCREASED BY THE AMOUNT OF SEPARATION.
        5) MATERIAL THICKER THAN 3/4 INCH SHALL BE PREHEATED BEFORE WELDING PER THE REQUIREMENTS OF THE AMERICAN WELDING SOCIETY.

13. SHOP PAINTING
    a. IN GENERAL, STRUCTURAL STEEL IS COVERED WITH PAINT OR FIREPROOFING.
    b. DO NOT PAINT THE FOLLOWING SURFACES:
        1) TO RECEIVE FIREPROOFING.
        2) TO BE WELDED.
        3) TOP OF TOP FLANGES OF COMPOSITE BEAMS TO RECEIVE SHEAR CONNECTORS.
    c. CLEANING AND PREPARATION:
        1) AFTER INSPECTION AND BEFORE SHIPPING, CLEAN STEEL WORK, PAINTED OR UNPAINTED. REMOVE LOOSE RUST, LOOSE MILL SCALE, AND SPATTER, SLAG, OR FLUX DEPOSITS. CLEAN STEEL IN ACCORDANCE WITH STEEL STRUCTURES PAINTING COUNCIL (SSPC).
    d. PAINTING:
        1) IMMEDIATELY AFTER SURFACE PREPARATION, APPLY STRUCTURAL STEEL PRIMER PAINT IN ACCORDANCE WITH MANUFACTURER'S INSTRUCTIONS. USE PAINTING METHODS THAT RESULT IN FULL COVERAGE OF JOINTS, CORNERS, EDGES, AND EXPOSED SURFACES.
        2) IF FOR ANY REASON ANY SURFACE TO RECEIVE FIELD WELDS OR SLIP CRITICAL BOLTS IS PAINTED, REMOVE SUCH PAINT COMPLETELY TO WITHIN STATED LIMITS BEFORE FIELD WELDING OR BOLTING.

14. TEMPORARY BRACING:
    a. THE CONTRACTOR SHALL BE FULLY RESPONSIBLE FOR THE DESIGN, STRENGTH, SAFETY AND ADEQUACY OF ALL TEMPORARY BRACING AND ALL METHODS OF CONSTRUCTION. THE SPECIFYING HEREIN OF REQUIREMENTS FOR BRACING OR CONSTRUCTION METHODS, OR ANY OTHER REQUIREMENTS OF THE SPECIFICATIONS SHALL BE CONSTRUED AS THE MINIMUM ACCEPTABLE, AND SHALL NOT ELIMINATE, LESSEN OR RESTRICT IN ANY MANNER THE RESPONSIBILITY OF THE CONTRACTOR FOR ALL CONSTRUCTION METHODS AND FOR THE SAFETY AND STABILITY OF THE STRUCTURAL STEEL WORK AT ALL STAGES OF ERECTION, UNTIL SUCH TIME AS THE PERMANENT BRACING SYSTEM BECOMES EFFECTIVE.
    b. PROVIDE TEMPORARY SHORING AND BRACING MEMBERS WITH CONNECTIONS OF SUFFICIENT STRENGTH TO BEAR IMPOSED LOADS.
    c. PROVIDE TEMPORARY GUY LINES TO ACHIEVE PROPER ALIGNMENT OF STRUCTURES AS ERECTION PROCEEDS.
    d. REMOVE TEMPORARY MEMBERS AND CONNECTIONS AFTER PERMANENT MEMBERS ARE IN PLACE, FINAL CONNECTIONS ARE MADE, AND BASEPLATES ARE GROUTED.

15. FIELD WELDING: SIMILAR PROCEDURES AS FOR SHOP WELDING.
    a. AT SUBFREEZING TEMPERATURES, PREHEAT ALL METAL LOCATED WITHIN 3 INCHES OF THE WELD TO A MINIMUM TEMPERATURE OF ABOUT 70 DEGREES FAHRENHEIT. NO WELDING SHALL BE DONE AT TEMPERATURES BELOW ZERO DEGREES FAHRENHEIT.

16. GAS CUTTING:
    a. DO NOT USE GAS CUTTING TORCHES IN FIELD FOR CORRECTING FABRICATION ERRORS IN PRIMARY STRUCTURAL FRAMING. CUTTING WILL BE PERMITTED ONLY ON SECONDARY MEMBERS THAT ARE NOT UNDER STRESS, AS ACCEPTABLE TO THE STRUCTURAL ENGINEER. FINISH GAS-CUT SECTIONS EQUAL TO A SHEARED APPEARANCE WHEN PERMITTED.

17. TOUCH-UP PAINTING:
    a. APPLY PAINT USING SAME MATERIAL AS USED FOR SHOP PAINTING.
    b. APPLY BY BRUSH OR SPRAY TO PROVIDE A MINIMUM DRY FILM THICKNESS OF 2.0 MILS

STRUCTURAL STEEL SPECIFICATIONS

1. SUBMIT CHECKED SHOP DRAWINGS FOR FABRICATION AND ASSEMBLY OF STRUCTURAL STEEL MEMBERS. PROVIDE DETAILS, PROCEDURES, DIAGRAMS AND SCHEDULES AS NECESSARY FOR FABRICATION AND ASSEMBLY IN SHOP AND FIELD.
    a. INCLUDE DETAILS OF CUTS, CONNECTIONS, CAMBER, HOLES, SURFACE PREP, SHOP FINISH (PAINT/GALV.) AND OTHER PERTINENT DATA.
    b. INDICATE WELDS BY STANDARD AWS SYMBOLS, AND SHOW SIZE, LENGTH, AND TYPE OF EACH WELD. IDENTIFY SHOP AND FIELD WELDS.
    c. CONTRACTOR SHALL PROVIDE ELECTRONIC VERSION IN PDF FORMAT. ONLY ELECTRONIC COPY WILL BE RETURNED WITH REVIEW COMMENTS.

2. CODES AND STANDARDS: COMPLY WITH PROVISIONS OF FOLLOWING, EXCEPT AS OTHERWISE INDICATED:
    a. AISC "CODE OF STANDARD PRACTICE FOR STEEL BUILDINGS AND BRIDGES".
    b. AISC "SPECIFICATIONS FOR THE DESIGN, FABRICATION, AND ERECTION OF STRUCTURAL STEEL FOR BUILDINGS", INCLUDING "COMMENTARY" AND SUPPLEMENTS THERETO AS ISSUED.
    c. AISC "SPECIFICATIONS FOR STRUCTURAL JOINTS USING ASTM A 325 OR A 490 BOLTS" APPROVED BY THE RESEARCH COUNCIL ON RIVETED AND BOLTED STRUCTURAL JOINTS OF THE ENGINEERING FOUNDATION.
    d. AWS D1.1 "STRUCTURAL WELDING CODE".
    e. ASTM A 6 "GENERAL REQUIREMENTS FOR DELIVERY OF ROLLED STEEL PLATES, SHAPES, SHEET PILING AND BARS FOR STRUCTURAL USE".
    f. TO THE EXTENT THAT ANY PROVISIONS CONTAINED IN ANY OF THE AFOREMENTIONED CODES AND STANDARDS CONFLICT WITH ANY OTHER TERMS, REQUIREMENTS OR DEFINITIONS CONTAINED IN THE CONTRACT DOCUMENTS, THEN THE TERMS, REQUIREMENTS OR DEFINITIONS CONTAINED ELSEWHERE IN THE CONTRACT DOCUMENTS SHALL CONTROL.

3. QUALIFICATIONS FOR WELDING WORK:
    a. QUALIFY WELDING PROCESSES AND WELDING OPERATORS IN ACCORDANCE WITH AWS "STANDARD QUALIFICATION PROCEDURE".
    b. PROVIDE CERTIFICATION THAT WELDERS TO BE EMPLOYED IN WORK HAVE SATISFACTORILY PASSED AWS QUALIFICATION TESTS.
    c. IF RECERTIFICATION OF WELDERS IS REQUIRED, RETESTING WILL BE CONTRACTOR'S RESPONSIBILITY.

4. SUPPLY ANCHOR BOLTS, BEARING PLATES AND OTHER ANCHORAGE ITEMS TO BE EMBEDDED IN OR ATTACHED TO OTHER CONSTRUCTION. SUPPLY WITHOUT DELAYING THE WORK.
    a. PROVIDE SETTING DIAGRAMS, TEMPLATES, INSTRUCTIONS, AND DIRECTIONS FOR INSTALLATION.
    b. PROVIDE ANCHOR ROD TEMPLATE WITH TARGET ARROWS FOR COLUMN CENTER LINES, STAMPED FOR COLUMN LOCATION, ORIENTATION AND ELEVATION.

5. DELIVERY, STORAGE, AND HANDLING:
    a. STORE MATERIALS TO PERMIT EASY ACCESS FOR INSPECTION AND IDENTIFICATION. KEEP STEEL MEMBERS OFF GROUND BY USING PALLETS, PLATFORMS, OR OTHER SUPPORTS.
    b. DO NOT STORE MATERIALS ON STRUCTURE IN A MANNER THAT MIGHT CAUSE DISTORTION OR DAMAGE TO MEMBERS OR SUPPORTING STRUCTURES.
    c. PROTECT STEEL MEMBERS AND PACKAGED MATERIALS FROM EROSION AND DETERIORATION. IF BOLTS AND NUTS BECOME DRY OR RUSTY, CLEAN AND RELUBRICATE BEFORE USE.

6. TUBULAR SECTIONS, (HSS ROUND, HSS RECTANGULAR) SHALL BE MANUFACTURED IN USA OR CANADA.

7. ELECTRODES FOR WELDING: COMPLY WITH AWS CODE.
    a. FOR HIGH-STRENGTH LOW-ALLOY STEEL AND EXISTING STEEL, PROVIDE ELECTRODES, WELDING RODS AND FILLER METALS EQUAL IN STRENGTH AND COMPATIBLE IN APPEARANCE WITH PARENT METAL JOINED.
    b. COMPLY WITH AWS REQUIREMENTS.

8. ANCHOR RODS:
    a. ASTM F1554 HEX-HEADED BOLT AND CARBON-STEEL NUT. GRADE INDICATED ON DRAWINGS.

9. PAINT - SHOP PRIMER:
    a. PAINT FOR SHOP PRIMER SHALL BE VOC COMPLIANT, BE LEAD AND CHROMATE FREE, AND HAVE NOT LESS THAN 50 PERCENT SOLIDS PER VOLUME.
    b. COLOR: WHITE OR LIGHT GRAY.
    c. PRODUCTS/MANUFACTURERS: PROVIDE ONE OF THE FOLLOWING:
        a) #10-99 PRIMER/TNEMEC
        b) KEM KROMIK B50 NZ6/SHERWIN WILLIAMS
        c) 960/RUSTOLEUM

10. NONMETALLIC SHRINKAGE-RESISTANT GROUT: PREMIXED, NONMETALLIC, NONCORROSIVE, NONSTAINING PRODUCT CONTAINING SELECTED SILICA SANDS, PORTLAND CEMENT, SHRINKAGE COMPENSATING AGENTS, PLASTICIZING AND WATER-REDUCING AGENTS, COMPLYING WITH CE-CRD-C621.
    a. PRODUCTS:
        1) EUCO N.S.; EUCLID CHEMICAL CO.
        2) CRYSTEX; L & M CONSTRUCTION CHEMICALS, INC.
        3) MASTERFLOW 928; MASTER BUILDERS.
        4) SEALTIGHT 588 GROUT; W. R. MEADOWS.
        5) FIVE STAR GROUT; U.S. GROUT CORP.
        6) SIKA GROUT 212, SIKA CORP.

CONCRETE SPECIFICATIONS CONTINUED

7. CONCRETE REINFORCEMENT:
    a) REINFORCEMENT SHALL BE ACCURATELY FABRICATED TO DIMENSIONS ON THE APPROVED SHOP DRAWINGS, DETAILS AND SCHEDULES.
    b) REINFORCEMENT SHALL BE BENT COLD AND SHALL NOT BE HEATED FOR ANY PURPOSE.
    c) REINFORCING SHALL BE ACCURATELY PLACED AND RIGIDLY SECURED IN POSITION IN ACCORDANCE WITH THE CRSI REQUIREMENTS FOR RECOMMENDED PRACTICE FOR PLACING REINFORCING BARS AND RECOMMENDED PRACTICE FOR PLACING BAR SUPPORTS.

8. CONCRETE PLACEMENT
    a) GENERAL:
        1) CONCRETING SHALL NOT BE CONTINUED WHEN THE AIR TEMPERATURE IS BELOW 45 DEGREES F. UNLESS THE AGGREGATES AND/OR WATER ARE HEATED TO PRODUCE A PLACING TEMPERATURE OF THE CONCRETE BETWEEN 60 DEGREES F. AND 90 DEGREES F. AND UNLESS ADEQUATE PROVISIONS ARE IN PLACE FOR MAINTAINING PROTECTION AGAINST FREEZING OF THE CONCRETE FOR AT LEAST 7 DAYS AFTER PLACING.
        2) NO CONCRETE SHALL BE PLACED ON FROZEN SUBGRADE.
        3) COMPLY WITH ACI 304, "RECOMMENDED PRACTICE FOR MEASURING, MIXING, TRANSPORTING, AND PLACING CONCRETE," AND AS HEREIN SPECIFIED.
        4) ADDITION OF WATER AFTER THE BATCH WILL NOT BE PERMITTED.
            a. INCREASE SLUMP FOR WORKABILITY BY ADDING WATER REDUCING ADMIXTURES.
        5) DEPOSIT CONCRETE CONTINUOUSLY OR IN LAYERS OF SUCH THICKNESS THAT NO CONCRETE WILL BE PLACED ON CONCRETE THAT HAS HARDENED SUFFICIENTLY TO CAUSE THE FORMATION OF SEAMS OR PLANES OF WEAKNESS.
    b) PLACING CONCRETE:
        1) DO NOT PLACE CONCRETE ON SURFACES CONTAINING WATER.
        2) DEPOSIT CONCRETE IN A MANNER TO AVOID INCLINED CONSTRUCTION JOINTS. WHERE PLACEMENT CONSISTS OF SEVERAL LAYERS, PLACE EACH LAYER WHILE PRECEDING LAYER IS STILL PLASTIC TO AVOID COLD JOINTS.
        3) CONCRETE SHALL HAVE AN UNRESTRICTED FREE VERTICAL DROP. THE STREAM OF CONCRETE SHALL NOT FALL OVER REINFORCING, TIES OR EMBEDDED ITEMS.
        4) CONSOLIDATION: CONSOLIDATE CONCRETE BY MECHANICAL VIBRATING EQUIPMENT SUPPLEMENTED BY HAND SPADING, RODDING OR TAMPING.
        5) MAINTAIN REINFORCING IN PROPER POSITION DURING CONCRETE PLACEMENT.

9. FORMED CONCRETE FINISHING:
    a) ROUGH FORM FINISH:
        1) REPAIR AND PATCH DEFECTIVE AREAS. CHIP OFF OR RUB DOWN FINS AND OTHER PROJECTIONS EXCEEDING 1/4 INCH IN HEIGHT.

10. CONCRETE CURING AND PROTECTION:
    a) GENERAL:
        1) PROTECT FRESHLY PLACED CONCRETE FROM PREMATURE DRYING AND AGAINST INJURY FROM HEAT, COLD AND DEFACEMENT OF ANY NATURE DURING CONSTRUCTION OPERATIONS.
        2) START INITIAL CURING AS SOON AS FREE WATER HAS DISAPPEARED FROM CONCRETE SURFACE AFTER PLACING AND FINISHING.
        3) CURING SHALL BE IN ACCORDANCE WITH ACI 301 PROCEDURES.
    b) CURING METHODS:
        1) PERFORM CURING OF CONCRETE BY ONE OF THE FOLLOWING METHODS:
            a. MOIST CURING.
            b. MOISTURE-RETAINING COVER CURING.
            c. APPLICATION OF A DISSIPATING CURING COMPOUND.
    c) PROVIDE MOISTURE CURING BY FOLLOWING METHODS:
        1) KEEP CONCRETE SURFACE CONTINUOUSLY WET BY COVERING WITH WATER.
        2) COVER CONCRETE SURFACE WITH SPECIFIED ABSORPTIVE COVER, THOROUGHLY SATURATE COVER WITH WATER, AND KEEP CONTINUOUSLY WET.
    d) PROVIDE MOISTURE-RETAINING COVER CURING AS FOLLOWS:
        1) COVER CONCRETE SURFACES WITH MOISTURE-RETAINING COVER FOR CURING CONCRETE, PLACED IN WIDEST PRACTICABLE WIDTH WITH SIDES AND ENDS LAPPED AT LEAST 3 INCHES AND SEALED BY WATERPROOF TAPE OR ADHESIVE.
    e) PROVIDE DISSIPATING CURING COMPOUND TO INTERIOR SLABS AS FOLLOWS:
        1) APPLY SPECIFIED DISSIPATING CURING COMPOUND TO CONCRETE SLAB AS SOON AS FINAL FINISHING OPERATIONS ARE COMPLETE.

11. CONCRETE SEALING:
    a) INTERIOR INTERIOR CONCRETE SLABS SHALL BE SEALED WITH INTERIOR SLAB SEALER COMPLIANT WITH MATERIAL REQUIREMENTS INDICATED IN SECTION "MATERIALS" EXCEPT WHERE COVERED WITH FLOOR FINISHES.
    b) PREPARE CONCRETE SURFACE AND APPLY CONCRETE SEALER IN ACCORDANCE WITH MANUFACTURERS REQUIREMENTS FOR APPROVED SLAB SEALER.

13. SAMPLING AND TESTING: IN ACCORDANCE WITH THE STATEMENT OF SPECIAL INSPECTION AND TESTING.

SOILS AND EARTHWORK SPECIFICATIONS CONTINUED

17. FIELD QUALITY CONTROL
    a. ALLOW GEOTECHNICAL TESTING AGENCY TO INSPECT AND VERIFY THE SOIL BEARING CAPACITY AT EACH NEW FOOTING PRIOR TO CONCRETE PLACEMENT.

CONCRETE SPECIFICATIONS

1. CONCRETE WORK SHALL CONFORM TO THE ACI STANDARD "BUILDING CODE REQUIREMENTS FOR REINFORCED CONCRETE"

2. THE CONTRACTOR SHALL BE FULLY RESPONSIBLE FOR THE DESIGN, STRENGTH, SAFETY AND ADEQUACY OF ALL FORMWORK, SHORING, BRACING AND ALL METHODS OF CONSTRUCTION. THE MIX DESIGN, STRENGTH, SLUMP, CONSISTENCY, FINISH AND GENERAL QUALITY OF CONCRETE.

3. ACTION SUBMITTALS:
    a) SUBMIT PRODUCT DATA STEEL-REINFORCEMENT, ADMIXTURES, CURING COMPOUNDS AND/OR MATERIALS, AND CONCRETE SEALERS.
    b) CONCRETE MIX DESIGN:
        1) TESTING FOR MATERIAL CERTIFICATION OF COMPLIANCE WITH ASTM AND MDOT STANDARDS SHALL BE PERFORMED NOT MORE THAN 90 DAYS FROM RECEIPT OF SUBMITTAL BY THE STRUCTURAL ENGINEER.
        2) PRODUCT DATA FOR ALL MATERIALS AND ADMIXTURES USED IN PROPOSED CONCRETE MIX.
    c) REINFORCEMENT SHOP DRAWINGS:
        1) SUBMIT SHOP DRAWINGS FOR REINFORCEMENT, FOR FABRICATION, BENDING, AND PLACEMENT OF CONCRETE REINFORCEMENT. COMPLY WITH ACI SP-66, "ACI DETAILING MANUAL"

4. MATERIALS:
    a) REINFORCING BARS: ASTM A 615, GRADE 60, DEFORMED.
    b) WELDED WIRE REINFORCING (WWR): ASTM A 1064,
        1) WELDED WIRE REINFORCEMENT SHALL BE FURNISHED IN SHEETS, NOT ROLLS.
    c) PORTLAND CEMENT: ASTM C 150, TYPE I.
        1) USE ONLY FOR AREAS NOT TO RECEIVE AN ADHERED FINISH.
    d) FLY ASH: ASTM C 618, TYPE C OR F, WITH ALKALI LESS THAN 1.5%.
        2) FOR AIR ENTRAINED CONCRETE RESTRICT LOSS ON IGNITION TO LESS THAN 1.5%.
        3) DO NOT USE FLY ASH IN:
            a. SLABS TO RECEIVE AN ADHERED FINISH.
            b. STRUCTURAL ELEMENTS EXPOSED TO VIEW.
        4) FLY ASH CONTAINING AMMONIA SHALL BE MITIGATED PRIOR TO SHIPMENT TO THE CONCRETE PRODUCER.
            a. DOSAGE OF MITIGATION AGENT TO BE APPROPRIATE TO AMOUNT OF AMMONIA IN FLY-ASH.
        5) MAXIMUM DOSAGE: 25% (BY WEIGHT) OF CEMENTITIOUS MATERIALS WHEN NO SLAG CEMENT IS USED.
    e) SLAG CEMENT: ASTM C989, GRADE 100 OR 120.
        1) MAXIMUM DOSAGE: 40% (BY WEIGHT) OF CEMENTITIOUS MATERIALS WHEN NO FLY-ASH IS USED.
        2) DO NOT USE IN STRUCTURAL ELEMENTS EXPOSED TO VIEW.
    f) NORMAL WEIGHT AGGREGATES: ASTM C 33
        1) RESTRICTION: THE USE OF BLAST FURNACE SLAG AS AN AGGREGATE IS NOT PERMITTED.
    g) WATER: ASTM C 1602 AND POTABLE.
    h) AIR-ENTRAINING ADMIXTURE: ASTM C 260.
    i) WATER-REDUCING ADMIXTURE: ASTM C 494, TYPE A.
    j) HIGH-RANGE WATER-REDUCING ADMIXTURE: ASTMC494, TYPE F.
    k) CONTROL JOINT FILLER NOT EXPOSED TO UV: 2 COMPONENT 100% SOLIDS COMPOUND, WITH 28 DAY SHORE A HARDNESS 90, OR SHORE D HARDNESS 50 (ASTM D 2240).
    l) CONTROL JOINT FILLER EXPOSED TO UV: 2 COMPONENT POLYUREA 100% SOLIDS COMPOUND, WITH 28 DAY SHORE HARDNESS OF 80-100 (ASTM D2240).
    m) VAPOR RETARDER: ASTM E 1745-09, CLASS A.
    n) MOISTURE-RETAINING COVER: COMPLYING WITH ASTMC171.
    o) DISSIPATING CURING COMPOUNDS: ASTM 309, TYPE 1.
    p) INTERIOR SLAB SEALER: ACRYLIC, HIGH SOLIDS LIQUID SEALER COMPLYING WITH ASTM C-1315.
        1) MINIMUM SOLIDS CONTENT: 20%

5. PROPORTIONING AND DESIGN OF MIXES:
    a) BASIC MIX PROPORTIONS SHALL BE ESTABLISHED BY THE CONTRACTOR IN ACCORDANCE WITH ACI 211.1.
    b) NORMAL-WEIGHT CONCRETE, COMPRESSIVE STRENGTH AS INDICATED IN CONCRETE GENERAL NOTES ON DRAWING SHEET SG-01:
    c) FOR CONCRETE SLABS ON GRADE, PROPORTION COARSE AGGREGATE QUANTITY, FINE AGGREGATE QUANTITY, AND CEMENT QUANTITY TO PRODUCE CONCRETE MIX WITH LESS THAN 0.04% 28 DAY DRYING SHRINKAGE MEASURED IN ACCORDANCE WITH ASTM C-157.
    d) ADMIXTURES:
        1) USE ADMIXTURES FOR WATER REDUCTION AND SET CONTROL IN STRICT COMPLIANCE WITH MANUFACTURER'S DIRECTIONS.
        2) AIR-ENTRAINING ADMIXTURES.
            a. USE AIR-ENTRAINING ADMIXTURE IN EXTERIOR EXPOSED CONCRETE.
            b. ADD AIR-ENTRAINING ADMIXTURE AT MANUFACTURER'S PRESCRIBED RATE TO RESULT IN CONCRETE AT POINT OF PLACEMENT HAVING TOTAL AIR CONTENT WITH A TOLERANCE OF PLUS OR MINUS 1-1/2 PERCENT FROM THE FOLLOWING: 6.0 % (SEVERE EXPOSURE) 1-INCH MAX. AGGREGATE.
    e) SLUMP LIMITS FOR NORMAL-WEIGHT CONCRETE:
        1) PROPORTION AND DESIGN MIXES TO RESULT IN CONCRETE SLUMP AT POINT OF TRUCK-DISCHARGE AS FOLLOWS:
            a. RAMPS, SLABS, AND SLOPING SURFACES: NOT MORE THAN 4 INCHES.
            b. OTHER CONCRETE: NOT MORE THAN 5 INCHES.

SOILS AND EARTHWORK SPECIFICATIONS

1. THIS SECTION INCLUDES THE FOLLOWING:
    a. EXCAVATION AND BACKFILL FOR FOUNDATIONS AND STRUCTURES SHOWN ON STRUCTURAL DRAWINGS.
    b. THIS SECTION APPLIES TO THE BUILDING FOOTPRINT,

2. QUALITY ASSURANCE
    a. CODES AND STANDARDS: PERFORM EXCAVATION WORK IN COMPLIANCE WITH APPLICABLE REQUIREMENTS OF AUTHORITIES HAVING JURISDICTION.

3. MATERIALS:
    a. SATISFACTORY SOIL MATERIALS ARE DEFINED AS THOSE COMPLYING WITH ASTM D2487 SOIL CLASSIFICATION GROUPS GW, GP, GM, SM, SW, AND SP.
    b. UNSATISFACTORY SOIL MATERIALS ARE DEFINED AS THOSE COMPLYING WITH ASTM D2487 SOIL CLASSIFICATION GROUPS GC, SC, ML, MH, CH, OL, OH, AND PT.
    c. UNSATISFACTORY SOILS ALSO INCLUDE SATISFACTORY SOILS NOT MAINTAINED WITHIN 2 PERCENT OF OPTIMUM MOISTURE CONTENT AT TIME OF COMPACTION.

4. UNSUITABLE MATERIAL:
    a. ORGANIC MATERIAL, OIL, ALKALI, CHEMICAL COMPOUNDS, ICE, SNOW, FROZEN MATERIALS, RUBBLE, RUBBISH, WOOD, AND OTHER SUBSTANCES SUBJECT TO DECOMPOSITION.
    b. LOOSE NON-COMPACTED FILL, LOOSE SOIL OR OBVIOUSLY COMPRESSIVE MATERIALS.

5. WATER CONTROL:
    a. PREVENT SURFACE WATER AND SUBSURFACE OR GROUND WATER FROM FLOWING INTO EXCAVATIONS AND FROM FLOODING OR IMPAIRING PROJECT SITE AND SURROUNDING PROPERTY.
    b. DO NOT USE TRENCH EXCAVATIONS AS TEMPORARY DRAINAGE DITCHES.
    c. DO NOT ALLOW WATER TO ACCUMULATE IN EXCAVATIONS. REMOVE WATER TO PREVENT SOFTENING OF FOUNDATION BOTTOMS, UNDERCUTTING FOOTINGS, AND SOIL CHANGES DETRIMENTAL TO STABILITY OF SUBGRADES AND FOUNDATIONS.
    d. MAINTAIN WATER TO A MINIMUM OF 2 FEET BELOW SUBGRADE LEVELS RECEIVING COMPACTION; AND IN THE CASE WHERE FOOTINGS BEAR ON SOIL, 2 FEET BELOW BOTTOM OF FOOTING.
    e. PROVIDE AND MAINTAIN PUMPS, WELL POINTS, SUMPS, SUCTION AND DISCHARGE LINES, AND OTHER DEWATERING SYSTEM COMPONENTS NECESSARY TO CONVEY WATER AWAY FROM EXCAVATIONS.

6. EXCAVATIONS FOR FOOTINGS AND FOUNDATIONS:
    a. DO NOT DISTURB BOTTOM OF EXCAVATION. TRIM BOTTOMS TO REQUIRED LINES AND GRADES TO LEAVE SOLID BASE TO RECEIVE OTHER WORK.
    b. IF BOTTOM OF EXCAVATION IS DISTURBED, OR IF BEARING PRESSURE CANNOT BE OBTAINED:
        1) EXCAVATE UNTIL BEARING STRATA IS REACHED.
        2) FOR DISTURBANCE ONLY: RECOMPACT OR EXCAVATE.

7. COLD WEATHER PROTECTION:
    a. PROTECT EXCAVATION BOTTOMS AGAINST FREEZING WHEN ATMOSPHERIC TEMPERATURE IS LESS THAN 35 DEGREES F.

8. EXCAVATION STABILITY:
    a. COMPLY WITH LOCAL CODES, ORDINANCES, AND REQUIREMENTS OF AGENCIES HAVING JURISDICTION.
    b. SLOPE SIDES OF EXCAVATIONS TO COMPLY WITH LOCAL CODES, ORDINANCES, AND REQUIREMENTS OF AGENCIES HAVING JURISDICTION. TEMPORARILY SHORE AND BRACE WHERE SLOPING IS NOT POSSIBLE BECAUSE OF SPACE RESTRICTIONS OR STABILITY OF MATERIAL EXCAVATED. MAINTAIN SIDES AND SLOPES OF EXCAVATIONS IN SAFE CONDITION UNTIL COMPLETION OF FILLING.

REVISION	DATE	BY	DESCRIPTION
1	10-25-2021	LL	Permits

Specifications

SMOKEY BONES

45011 SCHOENHERR
UTICA, MI 48315

efi global
EFI Global of Michigan, LLC
2855 Coolidge Hwy., Suite 216 • Troy, MI 48084
P: (586) 868-0220 • www.efiglobal.com

EFI FILE NUMBER
016.03857

KEM-TEC
& ASSOCIATES
PROFESSIONAL ARCHITECTS
PROFESSIONAL ENGINEERS
PROFESSIONAL SURVEYORS
22556 GRATIOT AVENUE
EASTPOINTE, MI 48021
(586)772-2222 PHONE
(586)772-4048 FAX

72 HOURS
(3 WORKING DAYS)
BEFORE YOU DIG
CALL MISS DIG
800-482-7171
(TOLL FREE)

STATE OF MICHIGAN
LAWRENCE E. LESNIAK
NO. 37736
LICENSED PROFESSIONAL ENGINEER

DRAWN BY: L. LESNIAK
SCALE: AS NOTED
DATE: 10/25/2021
PROJECT NO: 21-02333

SHEET NO:
SG-03

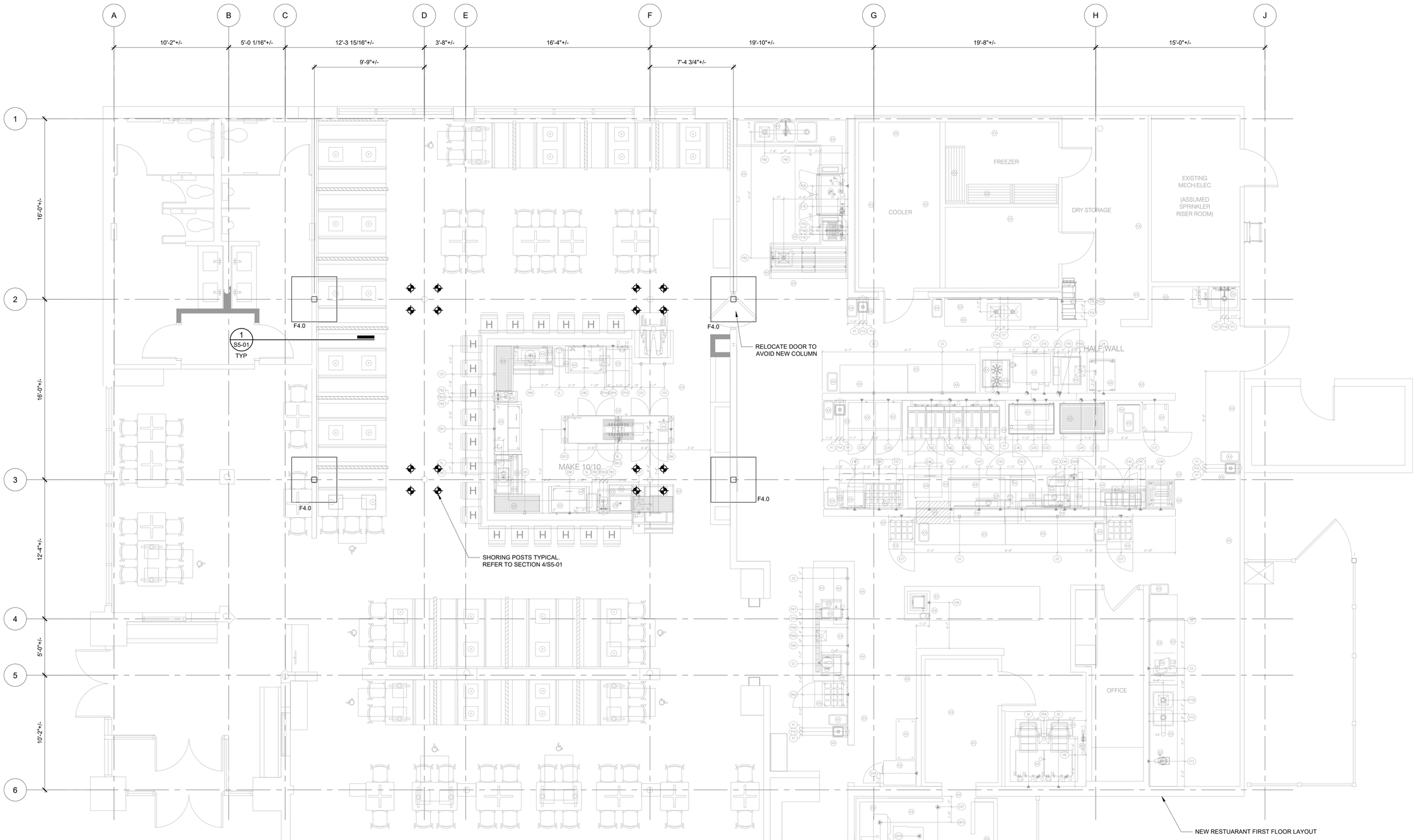

NEW FOUNDATION PLAN

SCALE: 1/4" = 1'-0" (24" X 36")

SPREAD FOOTING SCHEDULE				
Type Mark	Length	Width	Thickness	Reinforcing
F-4.0	4'-0"	4'-0"	1'-4"	(4) #6 EA WAY @ BOTT

FOUNDATION PLAN NOTES

1. REFER TO DRAWING SG-01 FOR GENERAL NOTES.
2. REFER TO DRAWING SG-02 FOR SPECIAL INSPECTION & TESTING.
3. REFER TO DRAWING SG-03 FOR SPECIFICATIONS.
4. TOP OF SLAB REFERENCE ELEVATION = 0' - 0" U.O.N.
5. TOP OF FOOTING ELEVATION = -0' - 8" U.O.N.
6. FOOTINGS SHALL BE PLACED ON COLUMN CENTERLINES U.O.N.
7. FOOTINGS SHALL BEAR ON NATIVE UNDISTURBED SOIL OR ENGINEERED FILL HAVING A NET ALLOWABLE BEARING CAPACITY OF 1500 PSF MINIMUM.
8. WHEN ADEQUATE BEARING CAPACITY IS NOT FOUND AT FOOTING DESIGN BEARING ELEVATION, UNDERCUT SUBGRADE TO ADEQUATE BEARING STRATUM AND FILL WITH COMPACTED ENGINEERED FILL OR LOW-STRENGTH FLOWABLE CONCRETE FILL.

STATE OF MICHIGAN
LAWRENCE J. LESNIAK
NO. 37736
LICENSED PROFESSIONAL ENGINEER

REVISION	DATE	BY	DESCRIPTION
1	10-25-2021	LL	Permits

Foundation Plan

SMOKEY BONES

45011 SCHOENHERR
UTICA, MI 48315

efi global

EFI Global of Michigan, LLC
801 Corporate Drive • Lexington, KY • 40503
P: (859) 868-9220 • www.efiglobal.com

EFI FILE NUMBER
016.03857

PROFESSIONAL ARCHITECTS
PROFESSIONAL ENGINEERS
PROFESSIONAL SURVEYORS
22556 GRATIOT AVENUE
EASTPOINTE, MI 48021
(586)772-2222 PHONE
(586)772-4048 FAX
KEM-TEC & ASSOCIATES

72 HOURS
(3 WORKING DAYS)
BEFORE YOU DIG
CALL MISS DIG
800-482-7171
(TOLL FREE)

DRAWN BY:	L. LESNIAK
SCALE:	AS NOTED
DATE:	10/25/2021
PROJECT NO:	21-02333

SHEET NO:
SP-01

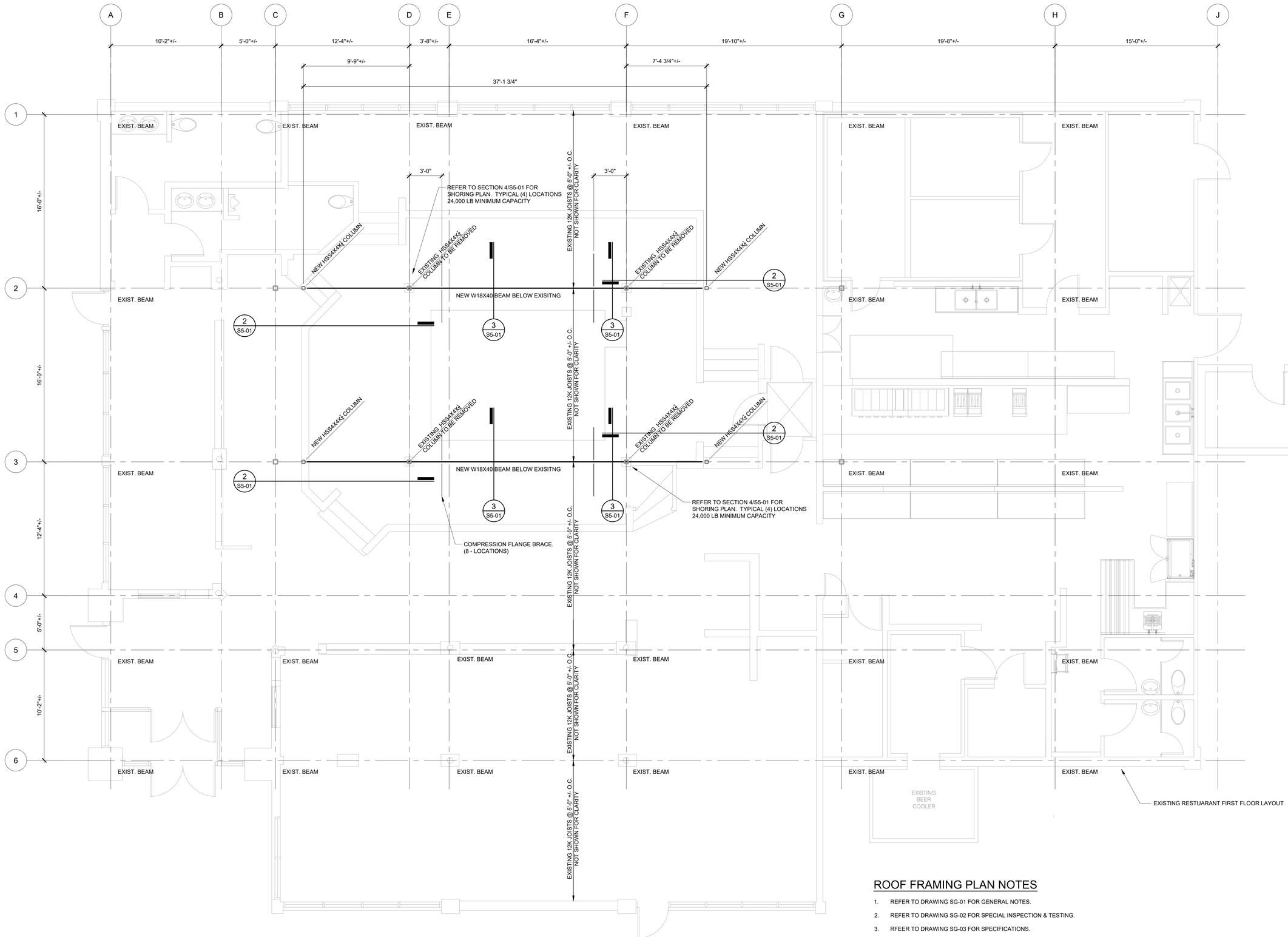

ROOF FRAMING MODIFICATION

SCALE: 1/4" = 1'-0" (24" X 36")

ROOF FRAMING PLAN NOTES

1. REFER TO DRAWING SG-01 FOR GENERAL NOTES.
2. REFER TO DRAWING SG-02 FOR SPECIAL INSPECTION & TESTING.
3. RFEER TO DRAWING SG-03 FOR SPECIFICATIONS.
4. TYPICAL DETAILS APPLY TO ALL DRAWINGS. USE THROUGHOUT EXCEPT WHERE OTHERWISE SHOWN OR NOTED.
4. TOP OF STEEL @ HP = REFER TOSECTIONS.

STATE OF MICHIGAN
LAWRENCE E. LESNIAK
NO. 37736
LICENSED PROFESSIONAL ENGINEER

REVISION	DATE	BY	DESCRIPTION
1	10-25-2021	LL	Permits

Roof Framing Plan

SMOKEY BONES
45011 SCHOENHERR
UTICA, MI 48315

efi global
EFI Global of Michigan, LLC
801 Corporate Drive • Troy, MI 48083
P: (586) 868-0220 • www.efiglobal.com

EFI FILE NUMBER
016.03857

PROFESSIONAL ARCHITECTS
PROFESSIONAL ENGINEERS
PROFESSIONAL SURVEYORS
22556 GRATIOT AVENUE
EASTPOINTE, MI 48021
(586)772-2222 PHONE
(586)772-4048 FAX
KEM-TEC & ASSOCIATES

72 HOURS
(3 WORKING DAYS)
BEFORE YOU DIG
CALL MISS DIG
800-482-7171
(TOLL FREE)

DRAWN BY:	L. LESNIAK
SCALE:	AS NOTED
DATE:	10/25/2021
PROJECT NO:	21-02333

SHEET NO:
SP-02

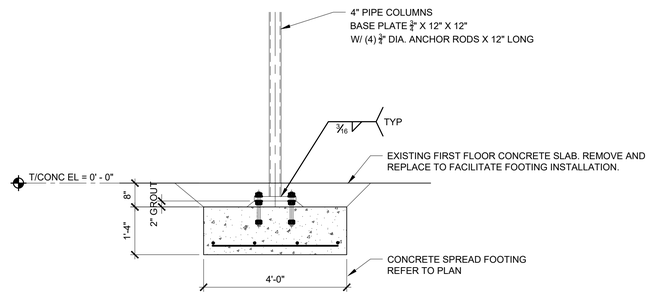

1 SP-01 **SECTION**

SCALE: 1/2" = 1'-0" (24" X 36")

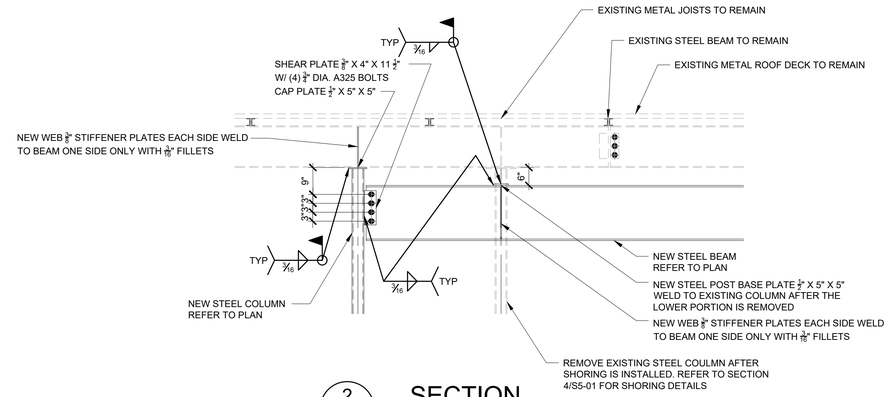

2 SP-02 **SECTION**

SCALE: 1/2" = 1'-0" (24" X 36")

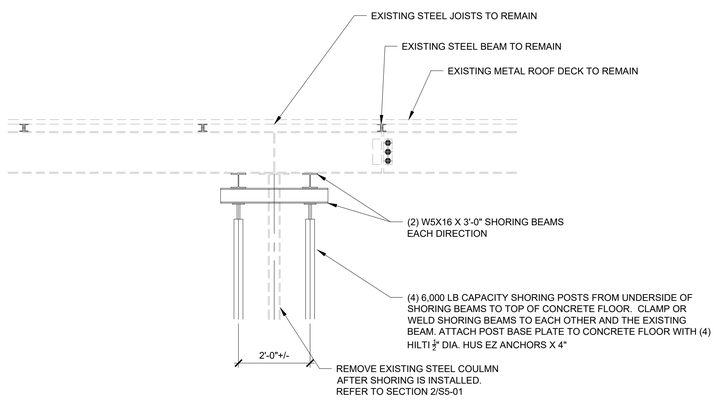

4 SP-02 **SHORING SECTION**

SCALE: 1/2" = 1'-0" (24" X 36")

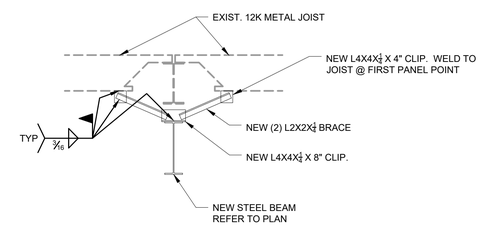

3 SP-02 **SECTION**

SCALE: 1/2" = 1'-0" (24" X 36")

REVISION	DATE	BY	DESCRIPTION
1	10-25-2021	LL	Permits

Sections

SMOKEY BONES
45011 SCHOENHERR
UTICA, MI 48315

efi global
EFI Global of Michigan, LLC
39575 Mound Road • Sterling Heights, MI 48314
P: (586) 884-5200 • www.efiglobal.com

EFI FILE NUMBER
016.03857

PROFESSIONAL ARCHITECTS
PROFESSIONAL ENGINEERS
PROFESSIONAL SURVEYORS
22556 GRATIOT AVENUE
EASTPOINTE, MI 48021
(586)772-2222 PHONE
(586)772-4048 FAX
KEM-TEC & ASSOCIATES

72 HOURS
(3 WORKING DAYS)
BEFORE YOU DIG
CALL MISS DIG
800-482-7171
(TOLL FREE)

STATE OF MICHIGAN
LAWRENCE A. KEMP
NO. 37736
LICENSED PROFESSIONAL ENGINEER

DRAWN BY: L. LESNIAK
SCALE: AS NOTED
DATE: 10/25/2021
PROJECT NO: 21-02333

SHEET NO:
S5-01

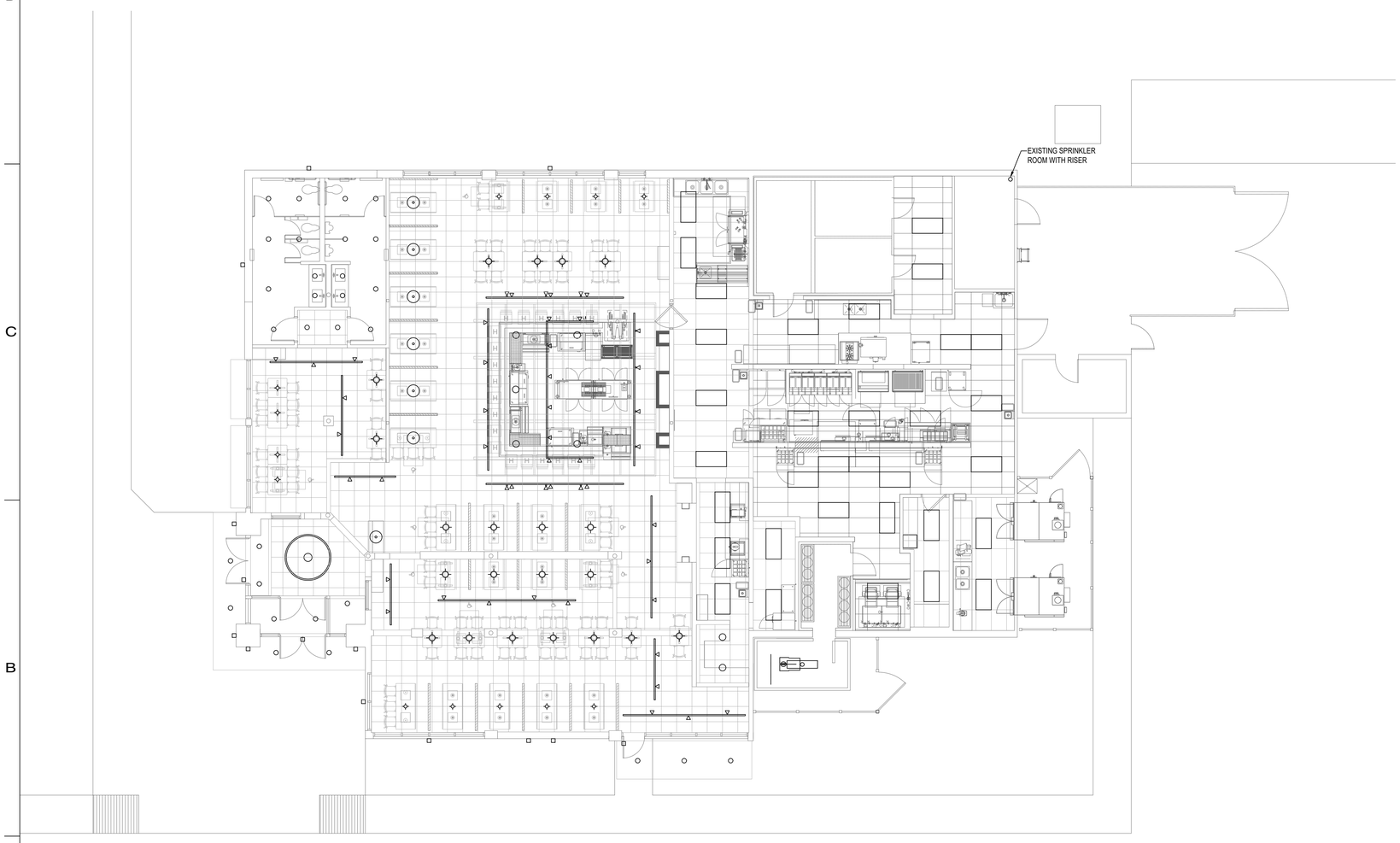

1 FP1.0 FLOOR PLAN - FIRE PROTECTION
1/8" = 1'-0"

FIRE PROTECTION GENERAL NOTES:

THE BUILDING CONTAINS AN EXISTING NFPA-13 COMPLIANT FIRE PROTECTION SYSTEM. THE EXISTING PIPING SHALL BE REMOVED BACK TO THE SPRINKLER RISER AND A NEW SYSTEM INSTALLED FOR THE ENTIRE BUILDING. THE FIRE PROTECTION SYSTEM SHALL BE DESIGNED AND INSTALLED IN ACCORDANCE WITH NFPA 13 REQUIREMENTS.

THE CONTRACTOR SHALL COORDINATE PIPE ROUTING WITH ALL DISCIPLINES TO IDENTIFY INTERFERENCES PRIOR TO PREPARATION OF FINAL LAYOUT OF DESIGN AND SHOP DRAWINGS. REFER TO ARCHITECTURAL DRAWINGS FOR SLOPED CEILINGS, FURRINGS, ETC. AND PROVIDE ADDITIONAL HEADS AS REQUIRED.

THE CONTRACTOR SHALL SIZE ALL PIPES REQUIRING MODIFICATION HYDRAULICALLY IN ACCORDANCE WITH NFPA-13 BASED ON ACTUAL ROUTING OF THE SYSTEM AND SUBMIT TO THE ARCHITECT/ENGINEER FOR REVIEW AND APPROVAL.

THE CONTRACTOR SHALL PERFORM THE FINAL DESIGNS, PREPARE LAYOUT AND FABRICATION DRAWINGS AND DETAILS FOR THE SPRINKLER SYSTEM IN ACCORDANCE WITH APPLICABLE NFPA CODES, AND MEET THE REQUIREMENTS OF THE STATE FIRE MARSHAL, PROPERTY INSURANCE ASSOCIATION AND ALL OTHER AGENCIES HAVING JURISDICTION. CONTRACTOR SHALL ASSUME FULL RESPONSIBILITY OF DESIGN AND OPERATION OF THE SPRINKLER SYSTEM.

PIPE RACKS, CONDUIT BANKS, OVERHANGS, UNDER HANGS, AND DUCTWORK OVER 4' IN WIDTH SHALL REQUIRE SPRINKLER HEADS TO BE INSTALLED BOTH ABOVE AND BELOW. CONTRACTOR SHALL CONFORM TO NFPA-13 REQUIREMENTS.

WHERE PIPING IS EXPOSED, PIPING SHALL BE INSTALLED AS HIGH AS POSSIBLE.

ALL EXPOSED PIPING SHALL BE PAINTED PER DIVISION 9 - FINISHES.

ALL PIPING SHALL BE CONCEALED UNLESS OTHERWISE NOTED ON PLANS. EXPOSED PIPING SHALL BE RUN TIGHT TO STRUCTURE AND SLOPE WITH THE STRUCTURE.

ALL HEADS SHALL BE QUICK RESPONSE TYPE.

ALL AREAS SHALL BE LIGHT HAZARD OCCUPANCY EXCEPT FOR EQUIPMENT ROOMS, MECHANICAL ROOMS, ELECTRICAL ROOMS, KITCHENS AND JANITOR'S CLOSETS WHICH SHALL BE ORDINARY HAZARD GROUP 1. THE HYDRAULIC MINIMUM REQUIREMENTS SHALL BE AS FOLLOWS:

LIGHT HAZARD - 0.10 GPM/SQFT - 1500 SQFT MOST REMOTE AREA - 225 SQFT MAX SPRINKLER SPACING - 100 GPM HOSE ALLOWANCE
ORDINARY HAZARD I - 0.15 GPM/SQFT - 1500 SQFT MOST REMOTE AREA - 130 SQFT MAX SPRINKLER SPACING - 250 GPM HOSE ALLOWANCE

INCREASE REMOTE AREA 30% FOR SLOPED CEILINGS. DECREASE REMOTE AREA PER NFPA 13:11.2.3.2.3. INCREASE REMOTE AREA FOR DRY SYSTEMS.

IN WOOD CONSTRUCTION BUILDINGS PROVIDE SPRINKLERS ABOVE THE CEILING AND IN ATTIC SPACES UNLESS OTHERWISE ALLOWED BY NFPA-13. PROVIDE INSULATION ABOVE CEILING IN CONCEALED SPACES PER NFPA-13 OR INCREASE SPRINKLER DESIGN AREA TO 3000 SQFT.

IN ROOMS WITH ACOUSTICAL TILE CEILINGS, ALL SPRINKLERS SHALL BE CENTERED BOTH WAYS WITHIN CEILING TILES.

iARCHITECTURE

SMOKEY BONES
UTICA, MI

CRUMB ENGINEERING
4609 Fairfield Street
P-504.455.4450
Metairie, La 70006
crumbengineering.com

COPYRIGHT
THESE DOCUMENTS ARE PROTECTED BY UNITED STATES COPYRIGHT LAW. THEY HAVE BEEN PREPARED SPECIFICALLY FOR THE PROJECT IDENTIFIED AND ARE NOT SUITABLE FOR USE ON ANY OTHER PROJECT OR AT ANY OTHER LOCATION WITHOUT THE EXPRESS WRITTEN APPROVAL AND PARTICIPATION OF iARCHITECTURE. REPRODUCTION OF THESE DOCUMENTS MUST BE AUTHORIZED BY THE ARCHITECT. ALL RIGHTS ARE RESERVED TO iARCHITECTURE.

STATE OF MICHIGAN
JASON T. CRUMB
License No. 6201070180
LICENSED PROFESSIONAL ENGINEER

REVISIONS	
NO.	DATE

PROJECT NO: IA 2119

SHEET FP1.0

DATE 11/10/2021

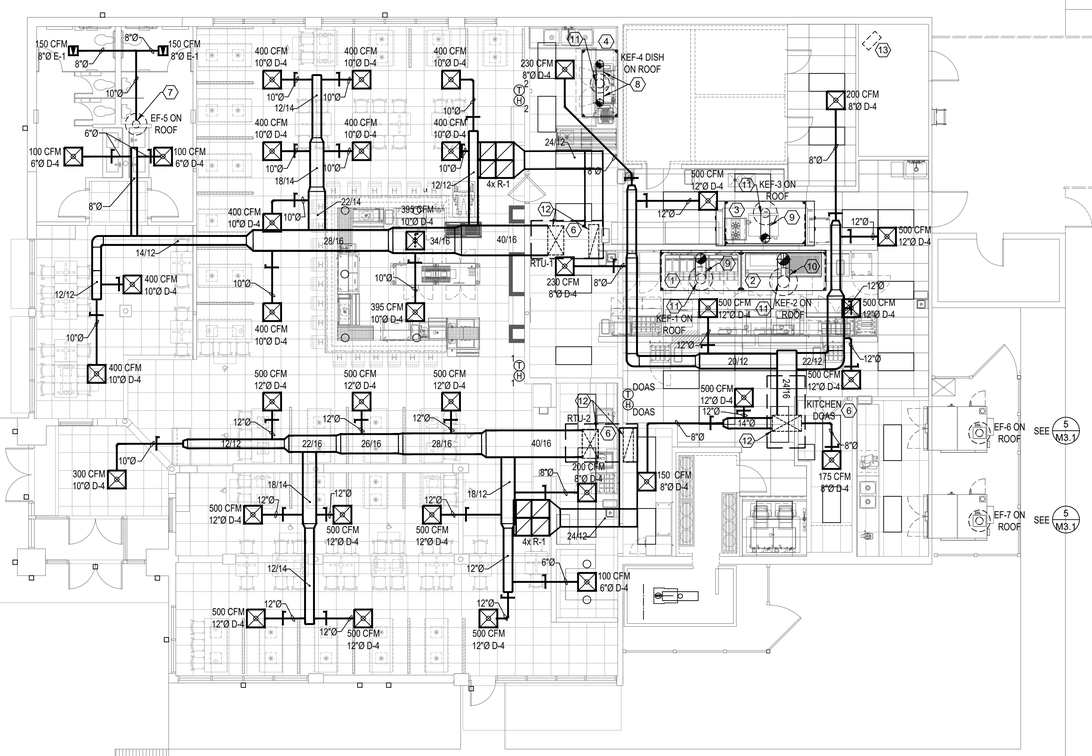

1 M1.0 FLOOR PLAN - HVAC
1/8" = 1'-0"

GENERAL NOTES THIS SHEET:

1. DUCT SIZES SHOWN ARE FREE AREA SIZES. SEE SPECIFICATIONS FOR DUCT MATERIALS AND INSULATION.
2. ALL DUCTWORK SHALL BE EXTERNALLY WRAPPED UNLESS NOTED OTHERWISE. INTERNALLY LINE ALL DUCTWORK FOR FIRST 10' OF SUPPLY AND RETURN FROM UNIT. EXPOSED RECTANGULAR DUCTWORK SHALL BE INTERNALLY LINED. ALL RETURN PLENUMS AND TRANSFER DUCTS SHALL BE INTERNALLY LINED.
3. PROVIDE VOLUME DAMPERS AT ALL TAPS INTO MAIN DUCT RUNS. PROVIDE VOLUME DAMPERS AT MAIN RETURN AND OUTSIDE AIR DUCTS.
4. INSULATE THE BACK OF ALL DIFFUSERS.
5. NO FLEX DUCT RUN SHALL EXCEED 8 FEET.
6. FLEX DUCT RUN OUTS TO DIFFUSERS SHALL BE SIZED SAME AS DIFFUSER NECK SIZE. FASTEN THE INNER HELIX AND OUTER JACKET OF FLEX DUCTS TO DIFFUSERS AND DUCTS WITH NYLON TIE WRAPS.
7. PROVIDE FLEXIBLE CONNECTIONS AT SUPPLY AND RETURN CONNECTIONS TO AC UNITS.
8. TOILET AND JANITOR EXHAUST FANS TO BE INTERLOCKED WITH ROOM LIGHT SWITCH.
9. ALL NEW DUCTWORK SHALL BE RUN ABOVE CEILINGS AND TIGHT TO STRUCTURE. COORDINATE WITH OTHER TRADES AND MAKE OFFSETS WHERE REQUIRED. PROVIDE DUCTWORK SHOP DRAWINGS. RUN DUCTWORK THROUGH TRUSSES WHERE SPACE IS LIMITED.
10. PROVIDE ACCESS TO ALL EQUIPMENT, INCLUDING ACCESS PANELS WHERE REQUIRED.
11. ALL EQUIPMENT SHALL BE INSTALLED IN ACCORDANCE WITH MANUFACTURER'S RECOMMENDATIONS. PROVIDE SUPPORTS, DUCTWORK, PIPING, CONTROLS, ETC AS REQUIRED.
12. REFER TO ARCHITECTURAL DRAWINGS FOR LOCATION OF FIRE WALLS AND PROVIDE FIRE DAMPERS IN ALL RATED WALLS AND FLOORS. PROVIDE FIRE DAMPERS IN ALL OUTSIDE AIR INTAKES.
13. PROVIDE DUCT DETECTORS IN THE SUPPLY AND RETURN FOR ALL AIR UNITS 2000 CFM AND OVER. PROVIDE FIRESTATS FOR ALL FANS 600 CFM AND OVER.
14. PROVIDE THERMOSTATS AND CONTROL WIRING FOR ALL AC AND FAN SYSTEMS SHOWN ON DRAWINGS.
15. PROVIDE TEST AND BALANCE FOR ALL AC AND FAN SYSTEMS.
16. PROVIDE INSULATED PLENUM BOXES (MINIMUM 12" DEEP UNLESS OTHERWISE NOTED) AT ALL LOUVERS FOR DUCT CONNECTIONS.
17. PROVIDE INSULATED CONDENSATE DRAIN PIPING FOR ALL AC SYSTEMS.
18. ALL REFRIGERATION PIPING SHALL BE SIZED AND INSTALLED PER MANUFACTURER'S RECOMMENDATIONS. INSULATE ALL PIPING FOR HEAT PUMP SYSTEMS. FOR LONG REFRIGERANT PIPING RUNS, CONSULT EQUIPMENT MANUFACTURER FOR SPECIFIC INSTALLATION REQUIREMENTS.
19. ALL KITCHEN AND DISHWASHER EXHAUST SHALL BE 18 GA, 304 SS FULLY WELDED INSTALLED PER NFPA-96 REQUIREMENTS. PROVIDE GASKETED, HIGH TEMPERATURE DUCT CLEANOUTS PER CODE.
20. SEE M3.0 AND M3.1 FOR DUCTWORK DETAILS.

SPECIFIC NOTES THIS SHEET:

1. HOOD 1. SEE M4 SHEETS FOR DETAILS.
2. HOOD 2. SEE M4 SHEETS FOR DETAILS.
3. HOOD 3. SEE M4 SHEETS FOR DETAILS.
4. HOOD 4. SEE M4 SHEETS FOR DETAILS.
5. CAPTIVEAIRE FACTORY DESIGNED STAINLESS STEEL ROUND DISTRIBUTION DUCT. COORDINATE EXACT REQUIREMENTS WITH MANUFACTURER. THE DUCT SYSTEM IS OWNER FURNISHED, CONTRACTED RECEIVED AND INSTALLED.
6. ROOFTOP UNIT. SEE M4 SHEETS FOR SCHEDULES.
7. 10"Ø UP TO EF ON ROOF.
8. 10"Ø 18 GA, 304 SS FULLY WELDED DUCT UP TO EF ON ROOF.
9. 14"Ø 18 GA, 304 SS FULLY WELDED DUCT UP TO EF ON ROOF.
10. 16"Ø 18 GA, 304 SS FULLY WELDED DUCT UP TO EF ON ROOF.
11. CONNECT HOOD EXHAUST DUCT TO HOOD EXHAUST COLLAR.
12. TRANSITION AND CONNECT TO UNIT OPENING.
13. EXISTING GAS UNIT HEATER TO REMAIN.

iARCHITECTURE

SMOKEY BONES
UTICA, MI

CRUMB ENGINEERING
4609 Fairfield Street
P-504.455.4450
Metairie, La 70006
crumbengineering.com

COPYRIGHT
THESE DOCUMENTS ARE PROTECTED BY UNITED STATES COPYRIGHT LAW. THEY HAVE BEEN PREPARED SPECIFICALLY FOR THE PROJECT IDENTIFIED AND ARE NOT SUITABLE FOR USE ON ANY OTHER PROJECT OR AT ANY OTHER LOCATION WITHOUT THE EXPRESS WRITTEN APPROVAL AND PARTICIPATION OF iARCHITECTURE. REPRODUCTION OF THESE DOCUMENTS MUST BE AUTHORIZED BY THE ARCHITECT. ALL RIGHTS ARE RESERVED TO iARCHITECTURE.

STATE OF MICHIGAN
JASON T. CRUMB
License No. 6201070180
LICENSED PROFESSIONAL ENGINEER

REVISIONS	
NO.	DATE

PROJECT NO: IA 2119

SHEET M1.0

DATE 11/10/2021

SPECIFIC NOTES THIS SHEET:

1. GAS PIPING WITH SHUTOFF VALVE, DRIPLEG, UNION AND W.P. FLEXIBLE GAS HOSE TO RTU.
2. RTU. SEE TYPICAL DETAIL ON M3.0. SEE CURB DETAIL 3/M3.1

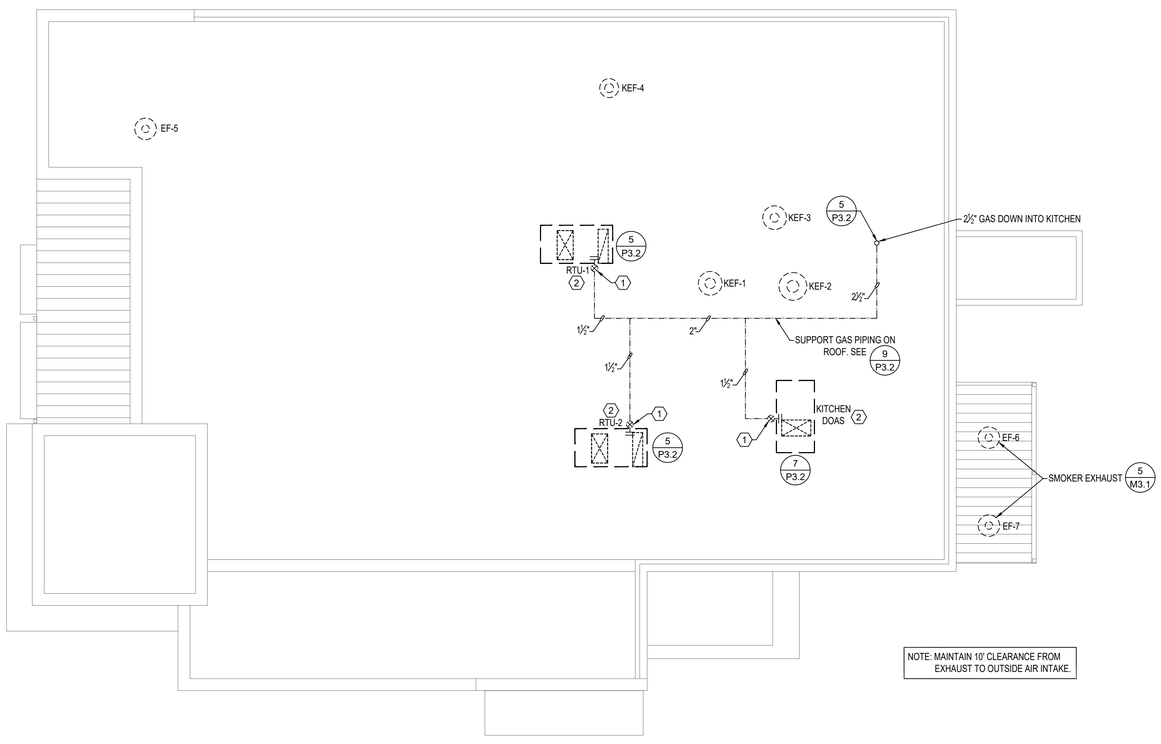

NOTE: MAINTAIN 10' CLEARANCE FROM EXHAUST TO OUTSIDE AIR INTAKE.

1/M2.0 ROOF PLAN - MECHANICAL
1/8" = 1'-0"

iARCHITECTURE

SMOKEY BONES
UTICA, MI

CRUMB ENGINEERING
4609 Fairfield Street
P-504.455.4450
Metairie, La 70006
crumbengineering.com

COPYRIGHT
THESE DOCUMENTS ARE PROTECTED BY UNITED STATES COPYRIGHT LAW. THEY HAVE BEEN PREPARED SPECIFICALLY FOR THE PROJECT IDENTIFIED AND ARE NOT SUITABLE FOR USE ON ANY OTHER PROJECT OR AT ANY OTHER LOCATION WITHOUT THE EXPRESS WRITTEN APPROVAL AND PARTICIPATION OF IARCHITECTURE. REPRODUCTION OF THESE DOCUMENTS MUST BE AUTHORIZED BY THE ARCHITECT. ALL RIGHTS ARE RESERVED TO IARCHITECTURE.

STATE OF MICHIGAN
JASON T. CRUMB
License No. 6201070180
LICENSED PROFESSIONAL ENGINEER

REVISIONS	
NO.	DATE

PROJECT NO: IA 2119

SHEET M2.0

DATE 11/10/2021

MECHANICAL LEGEND

SYMBOL	DESCRIPTION	SYMBOL	DESCRIPTION
CWS	CHILLED WATER SUPPLY	O/A	OUTSIDE AIR
CWR	CHILLED WATER RETURN	R/A	RETURN AIR
HWR	HEATING WATER RETURN	RAG	RETURN AIR GRILLE
HWS	HEATING WATER SUPPLY	S/A	SUPPLY AIR
CFM	CUBIC FEET PER MINUTE	(TYP)	TYPICAL
CLG.	CEILING	VTR	VENT THRU ROOF
CONN.	CONNECTION	H	HUMIDITY SENSOR
DN	DOWN	T	TEMPERATURE SENSOR
E/A	EXHAUST AIR	VD	VOLUME DAMPER
EF	EXHAUST FAN		FLEX DUCT
F.I.D.	1 1/2 HOUR UL 555 FIRE DAMPER		AIR CHAMBER (10" HIGH PIPE)

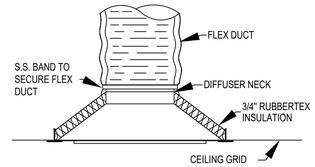

NOTE: ALL SEEMS SHALL BE PROPERLY SEALED AND INSULATION GLUED TO BACK OF DIFFUSER. INSULATION SHALL COVER ENTIRE DIFFUSER AND NECK.

DIFFUSER INSULATION DETAIL

NO SCALE

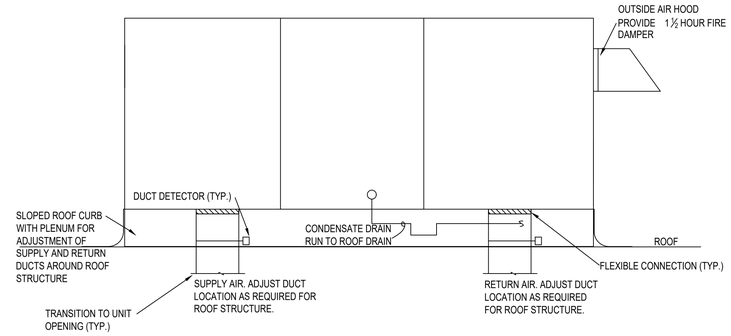

TYPICAL ROOF TOP AIR HANDLING UNIT DETAIL

NO SCALE

DIFFUSER GRILLE & REGISTER SCHEDULE

MARK	DESCRIPTION	
D	PERFORATED ALUMINUM CEILING DIFFUSER NO AIR PATTERN, 24"X24" LAY-IN FRAME, ROUND NECK AND WHITE FINISH.	TITUS PAR-AA
R-2	ALUMINUM SIDEWALL RETURN GRILLE WITH BLADES PARALLEL TO HORIZONTAL	TITUS MODEL 3F
E-1	PERFORATED ALUMINUM EXHAUST AIR GRILLE WITH ROUND NECK, 24"X24" LAY-IN FRAME FOR LAY-IN CEILING, WHITE FINISH.	TITUS PAR-AA

NOTES:
1. PROVIDE PLASTER FRAME FOR DIFFUSERS/GRILLES IN SHEETROCK CEILINGS.
2. PROVIDE PLENUM BOX AT REAR OF ALL RETURN GRILLES SIZED FOR GRILLE NECK FOR CONNECTION OF RETURN DUCTS.
3. INSULATE BACK OF ALL DIFFUSERS. SEE DETAIL ON DRAWINGS OR AT CONTRACTOR'S OPTION PROVIDE FACTORY BACK PAN INSULATION.
4. ADJUST LOCATION OF DIFFUSERS AS REQUIRED FOR ANY LIGHT CONFLICTS.
5. OWNER FURNISHED - CONTRACTOR RECEIVED AND SUPPLIED FOR ALL ITEMS THIS SCHEDULES.

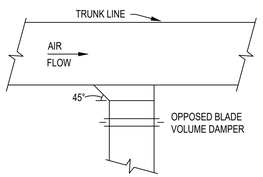

RECTANGULAR BRANCH DUCT TAKE-OFF

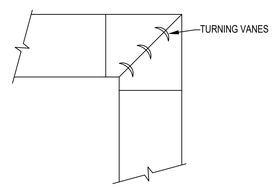

90° ELBOW

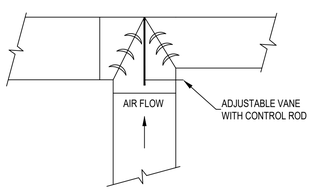

SPLITTER DAMPER

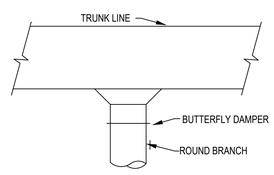

ROUND BRANCH DUCT TAKE-OFF

DUCT DETAILS

FOOD SERVICE EQUIPMENT MECHANICAL ROUGH-IN NOTES

1. ROUGH-IN PLAN SHOWS APPROXIMATE LOCATIONS FOR UTILITY REQUIREMENTS OF FOOD SERVICE EQUIPMENT SPECIFIED (INCLUDING FUTURE EQUIPMENT). CONTRACTOR SHALL FURNISH DIMENSIONED LOCATIONS FROM FINISHED WALLS AND/OR CENTER-LINE OF COLUMNS FOR ALL UTILITIES SHOWN ON CONTRACT DOCUMENT ROUGH-IN DRAWINGS.
2. WHERE APPLICABLE, ALL UTILITIES SHALL EXTEND UP THROUGH AND OUT OF BUILDING WALLS.
3. EXTEND AND CONNECT ALL UTILITIES TO CONNECTION POINTS OF FOOD SERVICE EQUIPMENT - DIVISION 15.
4. FURNISH AND INSTALL EXHAUST/SUPPLY FANS AND DUCTWORK (INDEPENDENT OF BUILDING HVAC SYSTEM) TO MEET REQUIREMENTS INDICATED. EXHAUST/SUPPLY FAN PACKAGE SHALL BE FURNISHED WITH MAGNETIC STARTERS - DIVISION 23.
5. EXHAUST/SUPPLY FAN CONTROL PANEL AND SWITCHES (EXCLUDING STARTERS) FOR EXHAUST HOODS SHALL BE FURNISHED BY DIVISION 11, THEREFORE NOT REQUIRED BY MANUFACTURER OF EXHAUST/SUPPLY FAN PACKAGE.
6. EXHAUST DUCTS SHALL BE WELDED TO DUCT COLLARS OF EXHAUST HOODS ABOVE COOKING EQUIPMENT IN ACCORDANCE WITH LATEST EDITIONS OF NFPA 96 - DIVISION 23.
7. FURNISH AND INSTALL AUTOMATIC WET CHEMICAL FIRE EXTINGUISHING SYSTEM FOR EXHAUST HOOD OVER COOKING EQUIPMENT TO MEET UL STANDARD 300, LATEST EDITIONS OF NFPA PAMPHLET NOS. 96 AND 17A, AND ALL OTHER APPLICABLE FIRE CODES - DIVISION 11.
8. TEMPERING OF SUPPLY AIR SHALL BE IN ACCORDANCE WITH HVAC DESIGN REQUIREMENTS - DIVISION 23.
9. ALL HVAC CEILING REGISTERS ARE TO BE DIRECTED AWAY FROM EXHAUST HOOD IN ACCORDANCE WITH CHAPTER 31 KITCHEN VENTILATION OF ASHRAE APPLICATIONS HANDBOOK, DATED 2007 - DIVISION 23.
10. DUCT ABOVE FINISHED CEILING SHALL BE WATER-TIGHT AND SLOPED SO THAT CONDENSATE FORMED WITHIN DUCT WILL DRAIN BACK INTO FUTURE DISHWASHER - DIVISION 23.

MECHANICAL SPECIFICATIONS

GENERAL

ALL MATERIAL SHALL BE NEW AND OF TOP QUALITY COMMERCIAL GRADE.

CONTRACTOR SHALL VISIT JOB SITE BEFORE SUBMITTING BID. FAILURE TO BE SO INFORMED SHALL NOT ALLOW FOR ADDITIONAL COMPENSATION.

ALL WORK SHALL BE PERFORMED IN ACCORDANCE WITH INDUSTRY STANDARDS, LOCAL AUTHORITIES RULES AND REGULATIONS, NFPA GUIDELINES, AND OTHER NATIONAL STANDARDS.

CONTRACTOR SHALL PROVIDE SUBMITTAL DATA ON ALL MAJOR EQUIPMENT AND SHALL PROVIDE SHOP DRAWINGS FOR DUCTWORK AND PLUMBING.

CONTRACTOR SHALL GUARANTEE ALL MATERIALS, EQUIPMENT, AND WORKMANSHIP FOR ONE YEAR AFTER DATE OF OWNER ACCEPTANCE.

EQUIPMENT AND PIPING SHALL BE PAINTED AND IDENTIFIED IN ACCORDANCE WITH INDUSTRY STANDARDS.

THE CONTRACTOR SHALL EMPLOY A TEST AND BALANCE AGENCY TO TEST AND BALANCE NEW AIR SYSTEMS IN ACCORDANCE WITH AABC GUIDELINES.

CONTRACTOR SHALL LEAVE THE PREMISES IN A CLEAN CONDITION AT THE END OF EACH WORKDAY.

DUCTWORK

PROVIDE AND INSTALL A COMPLETE SYSTEM OF DUCTWORK AS HEREIN SPECIFIED TO INCLUDE, BUT NOT LIMIT TO SUPPLY, RETURN, EXHAUST AND FRESH AIR WITH GRILLES, REGISTERS, DIFFUSERS AND APPURTENANCE TO PROVIDE A COMPLETE FUNCTIONAL AND OPERATIONAL SYSTEM. DUCT SIZES SHOWN ON DRAWINGS ARE FREE AREA DIMENSIONS. DESIGN SHALL BE AS DESCRIBED IN THE LATEST EDITION OF SMACNA MANUALS AND AS PER THE FOLLOWING:

1. ALL DUCTWORK TO BE INSULATED WITH 2" EXTERIOR WRAP, EXCEPT FOR EXPOSED DUCTWORK WHICH SHALL BE INSULATED WITH 1" INTERNAL LINER.

2. OUTSIDE AIR AND EXHAUST AIR DUCTS SHALL HAVE AIR-TIGHT SEAMS AND BE CONSTRUCTED AS PER APPLICABLE SECTIONS OF SMACNA MANUALS FOR LOW VELOCITY DUCTS.

3. SUPPLY AND RETURN DUCTS FOR LOW PRESSURE SYSTEM AND, LOW VELOCITY SYSTEMS SHALL BE GALVANIZED SHEETMETAL WITH AIRTIGHT SEAMS AND AS PER APPLICABLE SECTION OF SMACNA MANUALS FOR LOW VELOCITY DUCTS.

4. ROUND RIGID DUCTWORK SHALL BE ALL ROUND SPIRAL SINGLE WALL, GALVANIZED STEEL. INSULATE WITH 2" EXTERIOR DUCT WRAP. SEAL ALL SEAMS, JOINTS AND WALL PENETRATIONS WITH HARDCAST AS HEREIN SPECIFIED.

DUCT SUPPORTS FOR RECTANGULAR DUCTS SHALL BE A MINIMUM 1" X 18 GAUGE GALVANIZED STEEL BANDS. HANGER BANDS SHALL BE BENT UNDER LOWER CORNERS AND SECURED WITH SELF-TAPPING SCREWS AT CORNERS AND SIX (6") INCH INTERVALS UP THE SIDES. DISTANCE BETWEEN HANGERS SHALL BE AS RECOMMENDED BY SMACNA MANUAL FOR LOW AND MEDIUM DUCTWORK. DUCTWORK SHALL BE RIGIDLY SUPPORTED TO PREVENT VIBRATION. DUCT ATTACHMENTS TO STRUCTURE, LOWER HANGER ATTACHMENTS, DUCTS TRAPS AND RODS AND TRAPEZE ANGLES SHALL BE IN ACCORDANCE WITH SMACNA LOW PRESSURE AND HIGH PRESSURE DUCT STANDARDS.

WHERE THE DUCTS PASS THROUGH WALLS, DRAFTSTOPS OR PARTITIONS, THE SPACE SHALL BE PACKED WITH NON-COMBUSTIBLE MATERIALS, FILLING ALL VOIDS AROUND DUCT.

FIRE DAMPERS WITH FUSIBLE LINKS SHALL BE INSTALLED AT ALL POINTS IN DUCTWORK WHERE INDICATED ON DRAWINGS, AND/OR AS REQUIRED BY NFPA, 90-A, AND MECHANICAL CODE OF THE IBC.

ALL DUCTS SHALL BE SEALED PER SMACNA SEAL CLASS A. ALL JOINTS, LONGITUDINAL SEAMS AND WALL PENETRATIONS OF ALL SUPPLY, RETURN OUTSIDE AIR AND EXHAUST DUCTS SHALL BE SEALED WITH AN ELASTOMERIC TAPE WHICH SHALL CONSIST OF A PRESSURE SENSITIVE LAYER OF MODIFIED BUTYL RUBBER SEALER LAMINATED TO A FOIL BACKING MATERIAL WHICH SHALL CONFORM TO SURFACE VARIATIONS AND IRREGULAR AREAS AND SHALL NOT HARDEN, CRACK OR PEEL. THE SEALANT SHALL BE WATERPROOF AND SHALL BE A MINIMUM OF 15 MILS THICK. ALL DUCTWORK SHALL BE CLEANED AND PREPARED AND SEALANT SHALL BE APPLIED STRICTLY IN ACCORDANCE WITH MANUFACTURER'S INSTRUCTIONS AND RECOMMENDATIONS. SEALANT SHALL BE HARDCAST FG-1402, SURETAPE #653 OR APPROVED EQUAL, AT CONTRACTOR'S OPTION FLANGED GASKETED DUCT SYSTEM MAY BE USED FOR POSITIVE PRESSURE SYSTEM ONLY.

MECHANICAL SPECIFICATIONS

FLEXIBLE ROUND DUCT MAY BE USED FOR ALL DIFFUSER RUNOUTS, SHALL BE LISTED BY UNDERWRITERS' LABORATORIES, INCL, UNDER UL-181 STANDARDS AS CLASS 1 FLEXIBLE AIR DUCT MATERIAL COMPLYING WITH NFPA STANDARDS 90A. DUCTS SHALL BE RATED ON MAXIMUM PRESSURE OF 6 INCHES WG POSITIVE AND 2 INCHES WG NEGATIVE. THE DUCT SHALL BE FACTORY FABRICATED ASSEMBLY COMPOSED OF: AN INNER DUCT OF WOVEN AND COATED FIBERGLASS PROVIDING AN AIR SEAL AND BONDED PERMANENTLY TO CORROSION RESISTANT COATED STEEL WIRE HELIX: A 2" THICK FIBERGLASS INSULATING BLANKET AND LOW PERMEABLY OUTER VAPOR BARRIER OF FIBERGLASS REINFORCED METALIZED FILM LAMINATE. PRESSURE DROP NOT TO EXCEED 15" SP AT 500 FPM THROUGH 6" OR LARGER DUCT. MAXIMUM LENGTH OF FLEXIBLE DUCT SHALL NOT EXCEED 8'-0". CONNECT FLEXIBLE ROUND DUCT WITH 1/2" WIDE NYLON POSITIVE LOCKING NYLON STRAPS ON INNER DUCT AND OUTER DUCT.

FLEXIBLE CONNECTIONS SHALL BE PROVIDED BETWEEN EACH FAN UNIT AND DUCTWORK ON SUPPLY SIDE AND ALSO ON RETURN SIDE. MATERIAL SHALL BE FLEXIBLE FIRE-RESISTIVE MATERIAL, MINIMUM 4" WIDE, UL LISTED, WITH NO METAL TO METAL CONTACT.

MAXIMUM DUCT LEAKAGE SHALL BE +/- 5%, SMACNA SEAL CLASS A. DUCTWORK SHALL BE DESIGNED FOR 1.0" STATIC PRESSURE. CONSTRUCT DUCTWORK IN ACCORDANCE WITH SMACNA DUCT CONSTRUCTION STANDARDS FOR THE SPECIFIED PRESSURE CLASS.

PIPING AND EQUIPMENT INSULATION

ALL DOMESTIC HOT AND COLD WATER SHALL BE INSULATED WITH 1/2" MOLDED FIBERGLASS PIPE INSULATION.

ALL REFRIGERANT PIPING SHALL BE INSULATED WITH 3/4" CLOSED CELL FOAM INSULATION.

HEATING, VENTILATING, AND AIR CONDITIONING

PROVIDE NEW HVAC EQUIPMENT AS SCHEDULED. SEE M4 SERIES SHEETS FOR EQUIPMENT CUTSHEETS. INSTALL IN ACCORDANCE WITH MANUFACTURER'S RECOMMENDATIONS. RUN REFRIGERANT PIPING IN ACCORDANCE WITH MANUFACTURER'S RECOMMENDATIONS.

REFRIGERANT PIPING SHALL BE TYPE 'ACR' WITH BRAZED FITTINGS. PROVIDE LIQUID, SUCTION AND PIPING WITH ACCESSORIES AS REQUIRED BY MANUFACTURER. PROVIDE SHUTOFF VALVES AT EACH UNIT.

KITCHEN EXHAUST SYSTEM

Provide and install a complete kitchen exhaust duct system from kitchen hood duct collar to exhaust fan.

1. All kitchen exhaust and dishwasher exhaust duct work shown on plans shall be constructed of 18 gauge 304 stainless steel with a liquidtight continuous external weld. Ductwork shall conform to NFPA 96 requirements. Slope duct towards hoods.
2. Provide labeled, gasketed access panels as required by NFPA-96. Spacing of access panels not large enough for personnel entry shall not exceed 12 ft. Access panels shall be grease-tight and rated for 1500 degrees F. On main kitchen duct riser coordinate access panel locations in vertical duct with architectural access door on each floor.
3. Ductwork shall be supported by a minimum 18 gauge 304 stainless steel at intervals determined by SMACNA standards. Bolts, screws, rivets, and other mechanical fasteners shall not penetrate duct walls.

1 / M3.0 MECHANICAL SCHEDULES AND DETAILS

NO SCALE

iARCHITECTURE

SMOKEY BONES
UTICA, MI

CRUMB ENGINEERING
4609 Fairfield Street
P-504.455.4450
Metairie, La 70006
crumbengineering.com

COPYRIGHT
THESE DOCUMENTS ARE PROTECTED BY UNITED STATES COPYRIGHT LAW. THEY HAVE BEEN PREPARED SPECIFICALLY FOR THE PROJECT IDENTIFIED AND ARE NOT SUITABLE FOR USE ON ANY OTHER PROJECT OR AT ANY OTHER LOCATION WITHOUT THE EXPRESS WRITTEN APPROVAL AND PARTICIPATION OF ARCHITECTURE. REPRODUCTION OF THESE DOCUMENTS MUST BE AUTHORIZED BY THE ARCHITECT. ALL RIGHTS ARE RESERVED TO iARCHITECTURE.

STATE OF MICHIGAN
JASON T. CRUMB
License No. 6201070180
LICENSED PROFESSIONAL ENGINEER

REVISIONS	
NO.	DATE

PROJECT NO: IA 2119

SHEET M3.0

DATE 11/10/2021

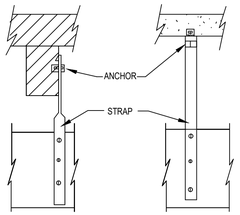

SIZING

MAX.SIDE OF DUCT	STRAP SIZE	SPACING
TO 30"	1"X18 GA.	10'-0" O.C.
OVER 30"	1"X 1/8"	10'-0" O.C.

1 / M3.1 DUCT SUPPORT DETAIL

N.T.S.

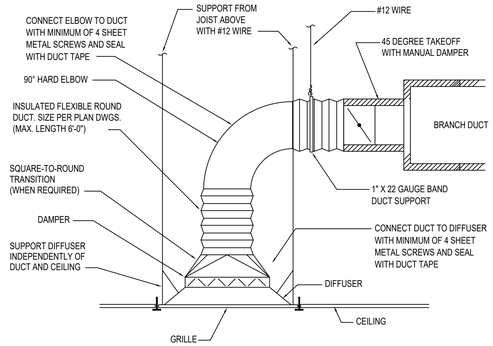

SUPPLY DIFFUSER INSTALLATION DETAIL (FLEXIBLE DUCT)

2 / M3.1 N.T.S.

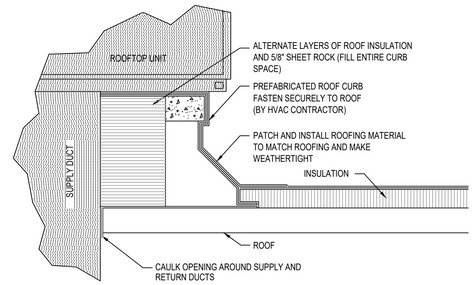

3 / M3.1 ROOF CURB DETAIL

N.T.S.

HANGER SIZES FOR RECTANGULAR DUCTS

MAXIMUM SIDE	HANGER	HORIZONTAL SUPPORT ANGLE	MAXIMUM SPACING
30"	1" x 18 GAGE STRAP	NONE REQUIRED	10'-0"
36"	1/4" ROUND ROD	1 1/2"x1 1/2"x1/8"	8'-0"
48"	1/4" ROUND ROD	2"x2"x1/8"	8'-0"
60"	5/16" ROUND ROD	2"x2"x1/8"	8'-0"

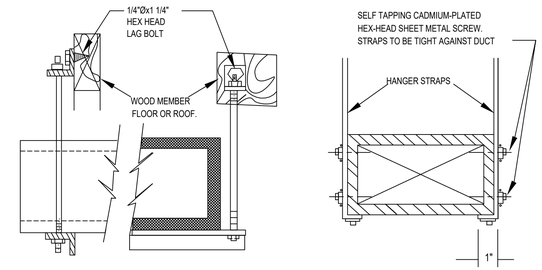

4 / M3.1 DUCT HANGER

N.T.S.

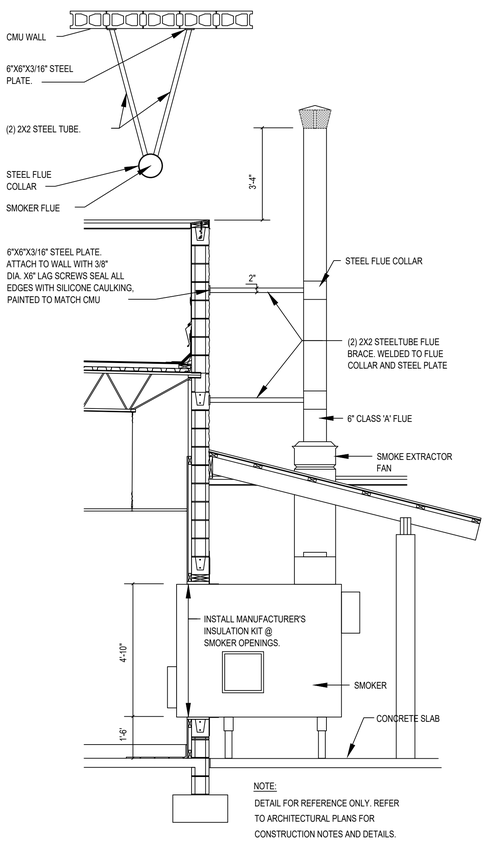

NOTE:
DETAIL FOR REFERENCE ONLY. REFER TO ARCHITECTURAL PLANS FOR CONSTRUCTION NOTES AND DETAILS.

5 / M3.1 SMOKER DETAIL

N.T.S.

1 / M3.1 MECHANICAL SCHEDULES AND DETAILS

NO SCALE

iA ARCHITECTURE

SMOKEY BONES
UTICA, MI

CRUMB ENGINEERING

4609 Fairfield Street
P-504.455.4450

Metairie, La 70006
crumbengineering.com

COPYRIGHT
THESE DOCUMENTS ARE PROTECTED BY UNITED STATES COPYRIGHT LAW. THEY HAVE BEEN PREPARED SPECIFICALLY FOR THE PROJECT IDENTIFIED AND ARE NOT SUITABLE FOR USE ON ANY OTHER PROJECT OR AT ANY OTHER LOCATION WITHOUT THE EXPRESS WRITTEN APPROVAL AND PARTICIPATION OF ARCHITECTURE. REPRODUCTION OF THESE DOCUMENTS MUST BE AUTHORIZED BY THE ARCHITECT. ALL RIGHTS ARE RESERVED TO iARCHITECTURE.

STATE OF MICHIGAN
JASON T. CRUMB
License No. 6201070180
LICENSED PROFESSIONAL ENGINEER

REVISIONS	
NO.	DATE

PROJECT NO: IA 2119

SHEET M3.1

DATE 11/10/2021

HOOD INFORMATION – JOB#5150263

HOOD NO	TAG	MODEL	MANUFACTURER	LENGTH	MAX COOKING TEMP	TYPE	APPLIANCE DUTY	DESIGN CFM/FT	TOTAL EXH CFM	EXHAUST PLENUM RISER(S) WIDTH	LENG	HEIGHT	DIA	CFM	VEL	SP	HOOD CONSTRUCTION	HOOD CONFIG END TO END	ROW
1	Fryers	5430 ND-2	CAPTIVEAIRE	9' 0"	450 DEG	I	MEDIUM	175	1575			4"	14"	1575	1473	-0.510"	430 SS WHERE EXPOSED	LEFT	ALONE
2	Grill	5430 ND-2	CAPTIVEAIRE	9' 6"	600 DEG	I	HEAVY	253	2400			4"	16"	2400	1719	-0.896"	430 SS WHERE EXPOSED	RIGHT	ALONE
3	Prep	6030 ND-2	CAPTIVEAIRE	9' 0"	450 DEG	I	MEDIUM	150	1350			4"	12"	1350	1719	-0.540"	430 SS WHERE EXPOSED	ALONE	ALONE
4	Dish	4830 VHB-G	CAPTIVEAIRE	7' 6"	700 DEG	II	N/A	107	800			4"	10"	400	733	-0.040"	304 SS 100%	ALONE	ALONE
												4"	10"	400	733	-0.040"			

HOOD INFORMATION

HOOD NO	TAG	FILTER(S) TYPE	QTY	HEIGHT	LENGTH	EFFICIENCY @ 7 MICRONS	LIGHT(S) QTY	TYPE	WIRE GUARD	UTILITY CABINET(S) LOCATION	SIZE	FIRE SYSTEM TYPE	FIRE SYSTEM SIZE	ELECTRICAL MODEL #	SWITCHES QUANTITY	FIRE SYSTEM PIPING	HOOD HANGING WEIGHT
1	Fryers	CAPTRATE SOLO FILTER	6	20"	16"	85% SEE FILTER SPEC	3	L55 SERIES E26	NO							YES	511 LBS
2	Grill	CAPTRATE SOLO FILTER	7	20"	16"	85% SEE FILTER SPEC	3	L55 SERIES E26	NO							YES	533 LBS
3	Prep	CAPTRATE SOLO FILTER	6	20"	16"	85% SEE FILTER SPEC	5	L55 SERIES E26	NO	RIGHT	12"x60"x30"	TANK FS	4.0	DCV-3011	1 LIGHT 1 FAN	YES	893 LBS
										LEFT	12"x60"x30"						
4	Dish						0									NO	259 LBS

HOOD OPTIONS

HOOD NO.	TAG	OPTION
1	Fryers	FIELD WRAPPER 11.00" HIGH FRONT, LEFT.
		RISER SENSOR INSTALL 6IN PLEN.
		LEFT WIDE VERTICAL END PANEL 42" TOP WIDTH, 36" BOTTOM WIDTH, 80" HIGH INSULATED 430 SS.
2	Grill	FIELD WRAPPER 11.00" HIGH FRONT, RIGHT.
		RISER SENSOR INSTALL 3IN DBL.
		RIGHT WIDE VERTICAL END PANEL 42" TOP WIDTH, 36" BOTTOM WIDTH, 80" HIGH INSULATED 430 SS.
3	Prep	FIELD WRAPPER 11.00" HIGH FRONT, LEFT, RIGHT.
		RIGHT QUARTER END PANEL 23" TOP WIDTH, 0" BOTTOM WIDTH, 23" HIGH 430 SS.
		RISER SENSOR INSTALL 6IN PLEN.
		LEFT WIDE VERTICAL END PANEL 42" TOP WIDTH, 36" BOTTOM WIDTH, 80" HIGH INSULATED 430 SS.
4	Dish	FIELD WRAPPER 11.00" HIGH FRONT, LEFT, RIGHT.

CAPTIVE-AIRE HOODS ARE BUILT IN COMPLIANCE WITH

Intertek

NFPA #96
UL 710 & ULC710 STANDARDS
E.T.L. LISTED 3054804-001

GENERAL NOTES :

1. ELECTRICAL HOOK-UP TO GAS MOTOR CONTROLS (MOTOR STARTERS, FAN SWITCHES, FAN DISCONNECTS, RELAYS, ETC.) BY OTHERS.
2. FIRE CHASE BY OTHERS, IF REQUIRED.
3. ALL PHASES OF INSTALLATION SHALL COMPLY WITH NFPA 96.
4. WRITTEN MEASUREMENTS HAVE PRECEDENCE OVER SCALE.
5. PROVIDE CLEANOUTS IN EXHAUST AIR DUCTS AS INDICATED TO ALLOW CLEANING AT ALL BENDS AND HORIZONTAL RUNS.
6. EXHAUST DUCT TO BE 16 GA. GAV STEEL. ALL SEAMS AND JOINTS TO HAVE A LIQUID TIGHT CONTINUOUS EXTERNAL WELD.
7. FAN TO HAVE A MINIMUM OF 10 FT. OF CLEARANCE FROM THE OUTLET TO ADJACENT BUILDINGS, PROPERTY LINES, AIR INTAKES OR 3 FT. VERTICAL CLEARANCE PER NFPA96.
8. HORIZONTAL EXHAUST DUCT TO SLOPE NOT LESS THAN 1/4" PER FOOT TOWARD HOOD FOR DUCT LESS THAN 75' LONG. 1" PER FOOT SLOPE FOR DUCT LONGER THAN 75'
9. HOOD TO OVERHANG COOKING EQUIPMENT 6" ON ALL OPEN SIDES.
10. EXHAUST DUCT TO BE PROTECTED FROM COMBUSTIBLES PER NFPA96 AND LOCAL CODE.
11. BUILDING PRESSURE SHALL NOT EXCEED 0.02" WATER COLUMN AT EXTERIOR DOORS.
12. KITCHEN SHALL BE BALANCED TO BE NEGATIVE WITH RESPECT TO THE DINING ROOM.

ELECTRICIAN NOTES :

All Hood/Fan/EMS/UDS/PCU electrical connections and interconnections to be provided and installed by Electrician. Electrician to provide, install, and land wiring between hood lights, hood temp sensors, remote Ansul system microswitches, and any other component requiring an electrical connection to the Captive-Aire electrical package.
Failure by the Electrician to make ALL required electrical connections and interconnections will result in the electrical controls not working properly. Any loss or failed test as a result of electrical controls not working properly is the responsibility of the Electrician.
Light bulbs for kitchen hoods to be provided and installed by electrician.

FOR QUESTIONS, CALL THE
SOUTHWEST FLORIDA REGIONAL OFFICE
4519 GEORGE RD, SUITE 150, TAMPA, FL 33634
PHONE: (800)378-2411 FAX: (813)354-4825

CUSTOMER APPROVAL TO MANUFACTURE:

Approved as Noted ☐
Approved with NO Exception Taken ☐
Revise and Resubmit ☐
SIGNATURE _____
Your Title _____ Date _____

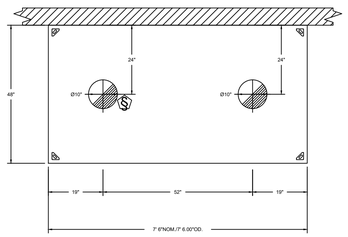

PLAN VIEW – HOOD #4 (Dish)
7' 6.00" LONG 4830VHB-G

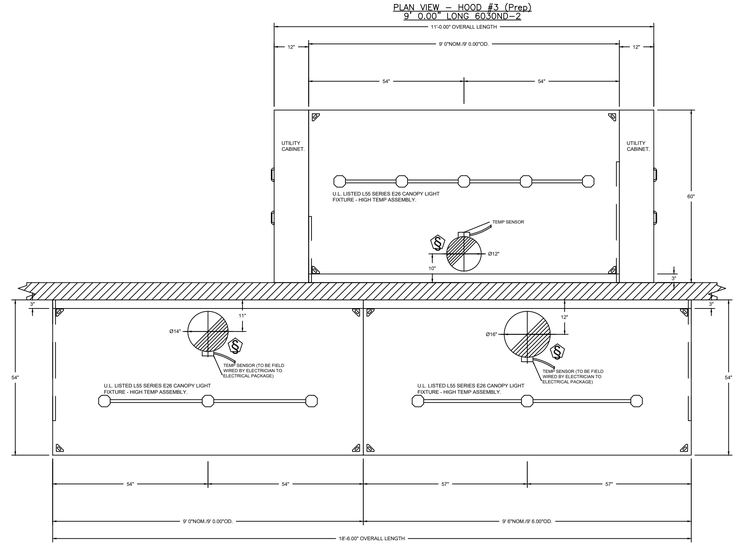

PLAN VIEW – HOOD #1 (Fryers)
9' 0.00" LONG 5430ND-2

PLAN VIEW – HOOD #2 (Grill)
9' 6.00" LONG 5430ND-2

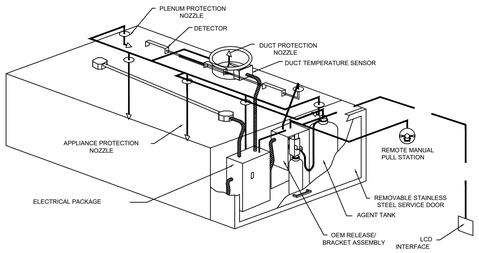

TYPICAL FIRE SYSTEM SYSTEM LAYOUT
TYPICAL HOOD CONTROL PANEL INSTALLATION

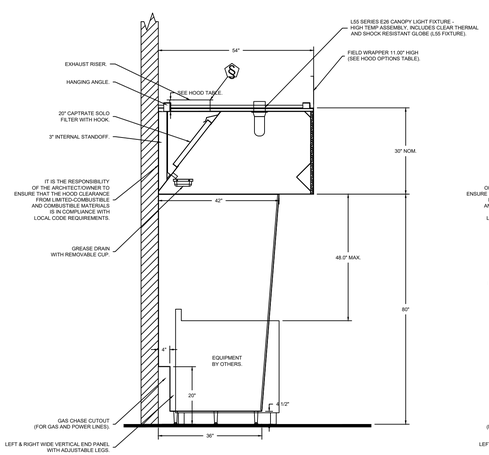

SECTION VIEW – MODEL 5430ND-2
HOOD – #1&2 (Fryers & Grill)

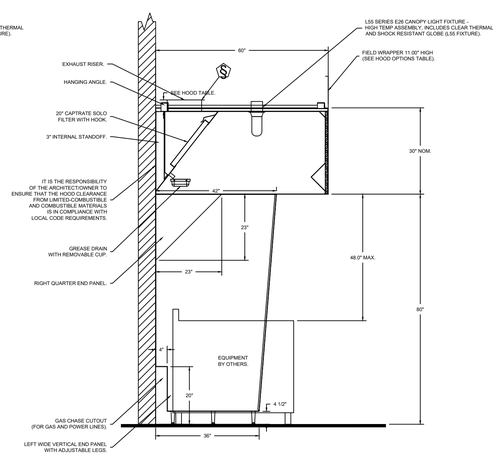

SECTION VIEW – MODEL 6030ND-2
HOOD – #3 (Prep)

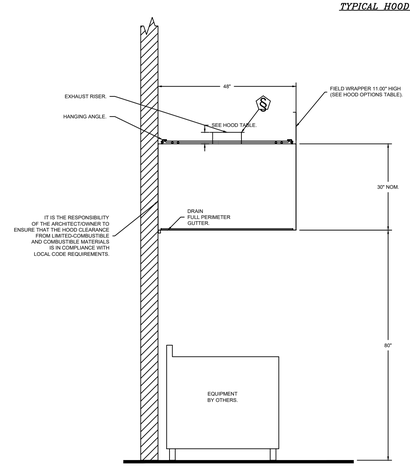

SECTION VIEW – MODEL 4830VHB-G
HOOD – #4 (Dish)

HOOD CORNER
HANGING ANGLE
(HARDWARE BY INSTALLER)

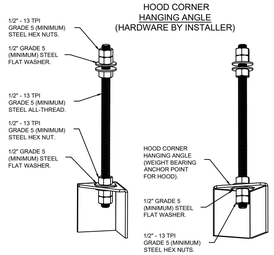

ASSEMBLY INSTRUCTIONS

HANGING ANGLE MUST BE SUPPORTED WITH 1/2" - 13 TPI GRADE 5 (MINIMUM) ALL-THREAD. SANDWICH HANGING ANGLES AND CEILING ANCHOR POINTS WITH 1/2" GRADE 5 (MINIMUM) STEEL FLAT WASHERS AND 1/2" - 13 TPI GRADE 5 (MINIMUM) HEX NUTS AS SHOWN. MUST USE DOUBLED HEX NUT CONFIGURATION BENEATH HOOD HANGING ANGLES AND ABOVE CEILING ANCHORS. MAINTAIN 1/4" OF EXPOSED THREADS BENEATH BOTTOM HEX NUT. TORQUE ALL HEX NUTS TO 57 FT-LBS.

1 / M4.0 CAPTIVEAIRE SCHEDULES AND DETAILS (OWNER FURNISHED - RECEIVED AND INSTALLED BY CONTRACTOR)
NO SCALE

REVISIONS

	DESCRIPTION	DATE:
1	Added RTU-1&2 and restroom fan	11/8/21
2		
3		
4		

CAPTIVEAIRE
www.captiveaire.com
National Accounts – Tampa
4519 George Road, Suite 150, Tampa, FL 33634 PHONE: (813) 906-2112 EMAIL: reg840@captiveaire.com

Smokey Bones Rev1
45001 Schoenherr Rd,
Utica, MI, 48315

DATE: 10/22/2021
DWG.#: 5150263
DRAWN BY: Dan Luddy
SCALE: 1/2" = 1'-0"
MASTER DRAWING
SHEET NO. 1

ARCHITECTURE
SMOKEY BONES
UTICA, MI
CRUMB ENGINEERING
4609 Fairfield Street Metairie, La 70006
P-504.455.4450 crumbengineering.com

COPYRIGHT
THESE DOCUMENTS ARE PROTECTED BY UNITED STATES COPYRIGHT LAW. THEY HAVE BEEN PREPARED SPECIFICALLY FOR THE PROJECT IDENTIFIED AND ARE NOT SUITABLE FOR USE ON ANY OTHER PROJECT OR AT ANY OTHER LOCATION WITHOUT THE EXPRESS WRITTEN APPROVAL AND PARTICIPATION OF ARCHITECTURE. REPRODUCTION OF THESE DOCUMENTS MUST BE AUTHORIZED BY THE ARCHITECT. ALL RIGHTS ARE RESERVED TO IARCHITECTURE.

STATE OF MICHIGAN
JASON T. CRUMB
License No. 6201070180
LICENSED PROFESSIONAL ENGINEER

REVISIONS NO.	DATE

PROJECT NO: IA 2119
SHEET M4.0

DATE 11/10/2021

ELECTRICAL PACKAGE – JOB#5150263

NO	TAG	PACKAGE #	LOCATION	SWITCHES		OPTION	FANS CONTROLLED					
				LOCATION	QUANTITY		FAN TAG	TYPE	Φ	HP	VOLT	FLA
1		DCV-3011	UTILITY CABINET RIGHT	08 - SHIP LOOSE W/ PREWIRE	1 LIGHT 1 FAN	SMART CONTROLS DCV	KEF-1	EXHAUST	1	0.750	115	8.9
							KEF-2	EXHAUST	3	1.500	208	6.6
							KEF-3	EXHAUST	1	0.750	115	8.9

JOB NO 5150263 | MODEL NUMBER DCV-3011 | JOB NAME Smokey Bones - Utica, MI | DRAWN BY | DATE 10/22/2021 | SCHEMATIC TYPE INSTALL | DWG NO ECP #1-1

DESCRIPTION OF OPERATION:
Demand Control Ventilation, w/ ventilat for 2 Exhaust Fans, Exhaust on in Fire, Lights out in Fire, Fans modulate based on duct temperature. INVERTER DUTY 3 PHASE MOTOR REQUIRED FOR USE WITH VFD. Room temperature sensor shipped loose for field installation Verify distance between VFD and Motor, additional cost could apply if distance exceeds 50 feet.

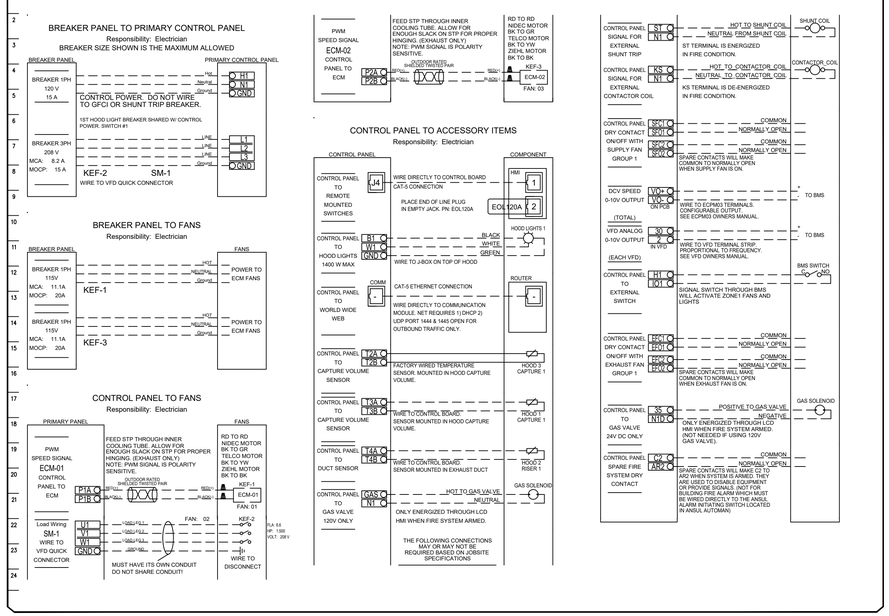

JOB NO 5150263 | MODEL NUMBER DCV-3011 | JOB NAME Smokey Bones - Utica, MI | DRAWN BY | DATE 10/22/2021 | SCHEMATIC TYPE INSTALL | DWG NO ECP #1-2

DESCRIPTION OF OPERATION:
Demand Control Ventilation, w/ ventilat for 2 Exhaust Fans, Exhaust on in Fire, Lights out in Fire, Fans modulate based on duct temperature. INVERTER DUTY 3 PHASE MOTOR REQUIRED FOR USE WITH VFD. Room temperature sensor shipped loose for field installation Verify distance between VFD and Motor, additional cost could apply if distance exceeds 50 feet.

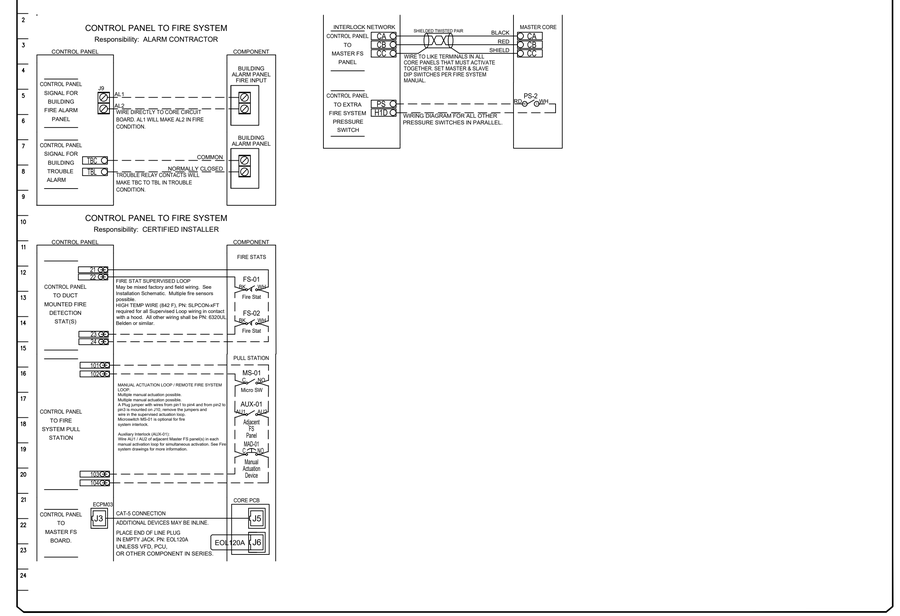

REVISIONS

	DESCRIPTION	DATE:
1	Added RTU-1&2 and restroom fan	11/8/21
2		
3		
4		

CAPTIVEAIRE
www.captiveaire.com
National Accounts – Tampa
4519 George Road, Suite 150, Tampa, FL 33634 PHONE: (813) 906-2112 EMAIL: reg840@captiveaire.com

Smokey Bones Rev1
45001 Schoenherr Rd,
Utica, MI, 48315

DATE: 10/22/2021
DWG.#: 5150263
DRAWN BY: Dan Luddy
SCALE: 1/2" = 1'-0"
MASTER DRAWING
SHEET NO. 2

IA ARCHITECTURE

SMOKEY BONES
UTICA, MI

CRUMB ENGINEERING
4609 Fairfield Street, Metairie, La 70006
P-504.455.4450, crumbengineering.com

COPYRIGHT
THESE DOCUMENTS ARE PROTECTED BY UNITED STATES COPYRIGHT LAW. THEY HAVE BEEN PREPARED SPECIFICALLY FOR THE PROJECT IDENTIFIED AND ARE NOT SUITABLE FOR USE ON ANY OTHER PROJECT OR AT ANY OTHER LOCATION WITHOUT THE EXPRESS WRITTEN APPROVAL AND PARTICIPATION OF IARCHITECTURE. REPRODUCTION OF THESE DOCUMENTS MUST BE AUTHORIZED BY THE ARCHITECT. ALL RIGHTS ARE RESERVED TO IARCHITECTURE.

STATE OF MICHIGAN
JASON T. CRUMB
License No. 6201070180
LICENSED PROFESSIONAL ENGINEER

REVISIONS	
NO.	DATE

PROJECT NO: IA 2119
SHEET M4.1

1 / M4.1 CAPTIVEAIRE SCHEDULES AND DETAILS (OWNER FURNISHED - RECEIVED AND INSTALLED BY CONTRACTOR)
NO SCALE

DATE 11/10/2021

EXHAUST FAN INFORMATION – JOB#5150263

FAN UNIT NO	TAG	QTY	FAN UNIT MODEL #	MANUFACTURER	CFM	ESP	RPM	MOTOR ENCL	HP	BHP	PHASE	VOLT	FLA	DISCHARGE VELOCITY	WEIGHT (LBS)	SONES
1	KEF-1	1	DU80HFA	CAPTIVEAIRE	1575	0.750	1200	TEAO-ECM	0.750	0.3030	1	115	8.9	498 FPM	93	10.5
2	KEF-2	1	DU180HFA	CAPTIVEAIRE	2400	1.250	1151	ODP,PREMIUM	1.500	1.0380	3	208	6.6	554 FPM	181	14.2
3	KEF-3	1	DU80HFA	CAPTIVEAIRE	1350	0.750	1132	TEAO-ECM	0.750	0.2540	1	115	8.9	427 FPM	93	9.1
4	KEF-4 DISH	1	DU33HFA	CAPTIVEAIRE	800	0.500	1569	TEFC	0.333	0.2320	1	115	3.8	396 FPM	70	16
5	EF-5-RESTROOM	1	DR12HFA	CAPTIVEAIRE	300	0.375	1154	TEAO-ECM	0.250	0.0670	1	115	2.9		49	5.6
6	EF-6 (SMOKER1)	1	DU50HFA	CAPTIVEAIRE	1200	0.500	1317	ODP	0.500	0.2280	1	115	8.4	456 FPM	89	12.5
7	EF-7 (SMOKER2)	1	DU50HFA	CAPTIVEAIRE	1200	0.500	1317	ODP	0.500	0.2280	1	115	8.4	456 FPM	89	12.5

CURB ASSEMBLIES

NO	ON FAN	TAG	WEIGHT	ITEM	SIZE
1	# 1	KEF-1	44 LBS	CURB	23.000"W X 23.000"L X 26.000"H ALONG LENGTH, RIGHT VENTED HINGED.
2	# 2	KEF-2	34 LBS	CURB	26.500"W X 26.500"L X 26.000"H ALONG LENGTH, RIGHT VENTED HINGED.
3	# 3	KEF-3	44 LBS	CURB	23.000"W X 23.000"L X 26.000"H ALONG LENGTH, RIGHT VENTED HINGED.
4	# 4	KEF-4 DISH	27 LBS	CURB	19.500"W X 19.500"L X 20.000"H ALONG LENGTH, RIGHT.
5	# 5	EF-5-RESTROOM	25 LBS	CURB	17.500"W X 17.500"L X 20.000"H ALONG LENGTH, RIGHT.
6	# 6	EF-6 (SMOKER1)	31 LBS	CURB	19.500"W X 19.500"L X 20.000"H 4.000:12.000 PITCH ALONG LENGTH, RIGHT VENTED HINGED.
7	# 7	EF-7 (SMOKER2)	31 LBS	CURB	19.500"W X 19.500"L X 20.000"H 4.000:12.000 PITCH ALONG LENGTH, RIGHT VENTED HINGED.
8	# 8	KITCHEN DOAS	104 LBS	CURB	59.500"W X 91.000"L X 20.000"H ALONG WIDTH, RIGHT INSULATED.
9	# 9	RTU-1	104 LBS	CURB	59.500"W X 91.000"L X 20.000"H ALONG WIDTH, RIGHT INSULATED.
10	# 10	RTU-2	104 LBS	CURB	59.500"W X 91.000"L X 20.000"H ALONG WIDTH, RIGHT INSULATED.

DOAS/RTU FAN SCHEDULE – JOB#5150263

FAN UNIT NO	TAG	QTY	DOAS/RTU MODEL #	MANUFACTURER	BLOWER	RETURN AIR CFM	MAX OUTSIDE AIR CFM	TOTAL CFM	ESP	HP	BHP	PHASE	VOLT	MCA	MOCP	WEIGHT (LBS)
8	KITCHEN DOAS	1	CASRTU3-I-500-20-20T-DOAS	CAPTIVEAIRE	20P-3	0	4000	4000	0.500	3.000	2.2500	3	208	81.5A	90A	2687
9	RTU-1	1	CASRTU3-I-400-24-15T-DOAS	CAPTIVEAIRE	24MF-3-RTU	3600	1500	5100	1.150	5.000	4.0940	3	208	71.9A	80A	2633
10	RTU-2	1	CASRTU3-I-400-24-15T-DOAS	CAPTIVEAIRE	24MF-3-RTU	3600	1500	5100	1.150	5.000	4.0940	3	208	71.9A	80A	2633

DOAS/RTU COOLING SCHEDULE

FAN UNIT NO	TAG	COMPRESSOR			OUTDOOR FAN				INDOOR COIL		OUTSIDE AIR DB TEMP	OUTSIDE AIR WB TEMP	MIXED AIR DB TEMP	MIXED AIR WB TEMP	LEAVING DB TEMP	LEAVING WB TEMP	LEAVING DP TEMP	TOTAL CAPACITY	SENSIBLE CAPACITY	LATENT CAPACITY	REHEAT LEAVING DB TEMP	REHEAT LEAVING WB TEMP	DESIRED REHEAT CAPACITY	MAX REHEAT CAPACITY	REHEAT LEAVING RELATIVE HUMIDITY	MOISTURE REMOVAL RATE	IEER
		TONNAGE	VOLTAGE	PHASE	MOTOR VOLTAGE	MOTOR Ø	MOTOR FREQUENCY	MOTOR QTY	ROWS	FACE AREA																	
8	KITCHEN DOAS	20	190-240	3	200-240	3	60	3	7	11.9 SQFT	82.2°F	75.9°F	82.2°F	75.9°F	57.3°F	56.4°F	55.9°F	264.0 MBH	103.6 MBH	160.4 MBH	70.0°F	61.2°F	54.9 MBH	129.6 MBH	61	144.7 LBS/HR	18.2
9	RTU-1	15	190-240	3	200-240	3	60	2	6	11.9 SQFT	82.2°F	75.9°F	77.1°F	66.5°F	55.3°F	55.1°F	55.0°F	175.2 MBH	117.1 MBH	58.1 MBH	70.0°F	60.7°F	82.3 MBH	129.6 MBH	59	52.8 LBS/HR	18.8
10	RTU-2	15	190-240	3	200-240	3	60	2	6	11.9 SQFT	82.2°F	75.9°F	77.1°F	66.5°F	55.3°F	55.1°F	55.0°F	175.2 MBH	117.1 MBH	58.1 MBH	70.0°F	60.7°F	82.3 MBH	129.6 MBH	59	52.8 LBS/HR	18.8

DOAS/RTU HEATING SCHEDULE

FAN UNIT NO	TAG	INPUT BTUs	OUTPUT BTUs	TEMP RISE	REQUIRED INPUT GAS PRESSURE	GAS TYPE	BURNER EFFICIENCY(%)
8	KITCHEN DOAS	444336	355469	75°F	7 IN. W.C. - 14 IN. W.C.	NATURAL	80
9	RTU-1	381409	305127	50°F	7 IN. W.C. - 14 IN. W.C.	NATURAL	80
10	RTU-2	381409	305127	50°F	7 IN. W.C. - 14 IN. W.C.	NATURAL	80

FANS #1 (KEF-1), #3 (KEF-3) - DU80HFA EXHAUST FAN

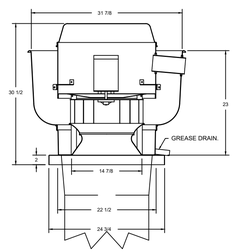

FEATURES:

- DIRECT DRIVE CONSTRUCTION (NO BELTS/PULLEYS).
- ROOF MOUNTED FANS.
- RESTAURANT MODEL.
- UL705 AND UL762 AND ULC-S645
- VARIABLE SPEED CONTROL.
- INTERNAL WIRING.
- THERMAL OVERLOAD PROTECTION (SINGLE PHASE).
- HIGH HEAT OPERATION 300°F (149°C).
- GREASE CLASSIFICATION TESTING.
- NEMA 3R SAFETY DISCONNECT SWITCH.

NORMAL TEMPERATURE TEST
EXHAUST FAN MUST OPERATE CONTINUOUSLY WHILE EXHAUSTING AIR AT 300°F (149°C) UNTIL ALL FAN PARTS HAVE REACHED THERMAL EQUILIBRIUM, AND WITHOUT ANY DETERIORATING EFFECTS TO THE FAN WHICH WOULD CAUSE UNSAFE OPERATION.

ABNORMAL FLARE-UP TEST
EXHAUST FAN MUST OPERATE CONTINUOUSLY WHILE EXHAUSTING BURNING GREASE VAPORS AT 600°F (316°C) FOR A PERIOD OF 15 MINUTES WITHOUT THE FAN BECOMING DAMAGED TO ANY EXTENT THAT COULD CAUSE AN UNSAFE CONDITION.

OPTIONS:

GREASE BOX.
FAN BASE CERAMIC SEAL - INSTALLED AT PLANT - FOR GREASE DUCTS.
ECM WIRING PACKAGE - PWM SIGNAL FROM ECPM20 PREWIRE (TELCO MOTOR), CCW ROTATION.
2 YEAR PARTS WARRANTY.

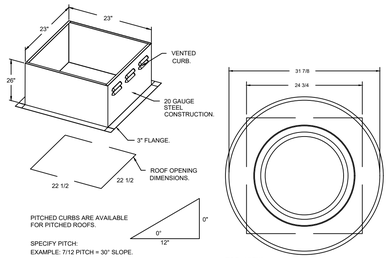

TOP VIEW

FAN #2 DU180HFA - EXHAUST FAN (KEF-2)

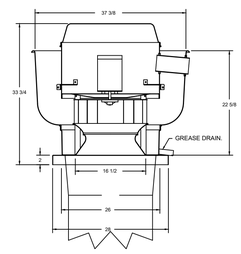

FEATURES:

- DIRECT DRIVE CONSTRUCTION (NO BELTS/PULLEYS).
- ROOF MOUNTED FANS.
- RESTAURANT MODEL.
- UL705 AND UL762 AND ULC-S645
- VARIABLE SPEED CONTROL.
- INTERNAL WIRING.
- THERMAL OVERLOAD PROTECTION (SINGLE PHASE).
- HIGH HEAT OPERATION 300°F (149°C).
- GREASE CLASSIFICATION TESTING.
- NEMA 3R SAFETY DISCONNECT SWITCH.

NORMAL TEMPERATURE TEST
EXHAUST FAN MUST OPERATE CONTINUOUSLY WHILE EXHAUSTING AIR AT 300°F (149°C) UNTIL ALL FAN PARTS HAVE REACHED THERMAL EQUILIBRIUM, AND WITHOUT ANY DETERIORATING EFFECTS TO THE FAN WHICH WOULD CAUSE UNSAFE OPERATION.

ABNORMAL FLARE-UP TEST
EXHAUST FAN MUST OPERATE CONTINUOUSLY WHILE EXHAUSTING BURNING GREASE VAPORS AT 600°F (316°C) FOR A PERIOD OF 15 MINUTES WITHOUT THE FAN BECOMING DAMAGED TO ANY EXTENT THAT COULD CAUSE AN UNSAFE CONDITION.

OPTIONS:

GREASE BOX.
FAN BASE CERAMIC SEAL - INSTALLED AT PLANT - FOR GREASE DUCTS.
2 YEAR PARTS WARRANTY.

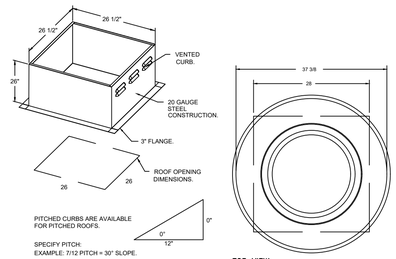

TOP VIEW

FAN #5 DR12HFA - EXHAUST FAN (EF-5-RESTROOM)

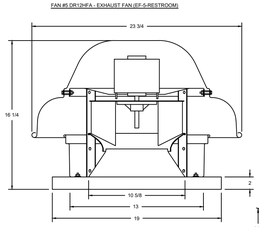

BACKDRAFT DAMPER INSTALLATION

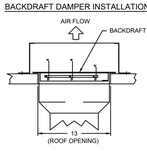

FEATURES:

- DIRECT DRIVE CONSTRUCTION (NO BELTS/PULLEYS).
- ROOF MOUNTED FANS.
- UL705.
- SAFETY DISCONNECT.
- STANDARD BIRD SCREEN.
- SPEED CONTROL.

OPTIONS:

ECM WIRING PACKAGE - MANUAL OR 0-10VDC REFERENCE SPEED CONTROL (TELCO MOTOR), CCW ROTATION.
I 12-BDD DAMPER.
2 YEAR PARTS WARRANTY.

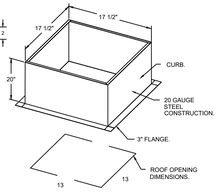

TYPICAL DOAS/RTU ROOF MOUNTING INSTALLATION INSTRUCTIONS

1. SECURE THE CURB TO THE ROOF FRAMING MEMBERS BY DRILLING 1/4" PILOT HOLES IN THE CURB FLANGES AT LOCATIONS SHOWN IN THE DIAGRAM BELOW. USING 3/8" X 2" ZINC PLATED STEEL LAG BOLTS, AND ZINC PLATED WASHERS, SCREW THROUGH THE CURB FLANGES AND INTO THE ROOF FRAMING MEMBERS. A MINIMUM OF (5) LAG BOLTS ON EACH SHORT SIDE, AND (7) LAG BOLTS ON EACH LONG SIDE IS REQUIRED.

2. SECURE THE UNIT BASE TO THE SIDE WALLS OF THE CURB USING (24) 1/4"-14 X 2" SELF-DRILLING, STEEL ZINC PLATED SCREWS. PRE-PUNCHED HOLES HAVE BEEN PROVIDED FOR EACH SCREW LOCATION.

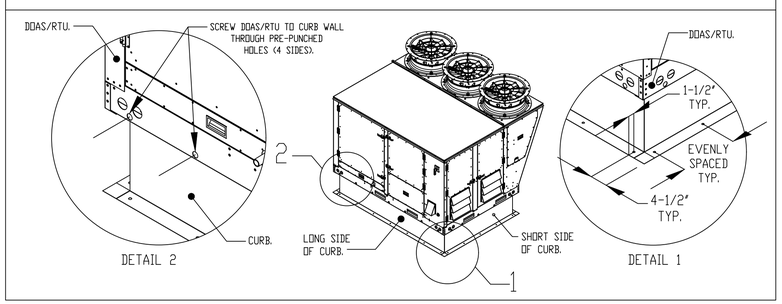

FAN #4 DU33HFA - EXHAUST FAN (KEF-4 DISH)

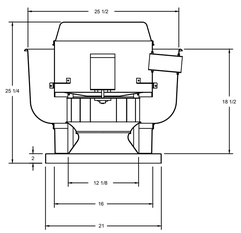

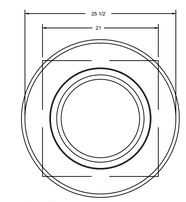

TOP VIEW

FEATURES:

- DIRECT DRIVE CONSTRUCTION (NO BELTS/PULLEYS).
- ROOF MOUNTED FANS.
- UL705.
- VARIABLE SPEED CONTROL.
- INTERNAL WIRING.
- THERMAL OVERLOAD PROTECTION (SINGLE PHASE).
- NEMA 3R SAFETY DISCONNECT SWITCH.

OPTIONS:

SCR-11 BIRD SCREEN.
I 15-BDD DAMPER.
2 YEAR PARTS WARRANTY.

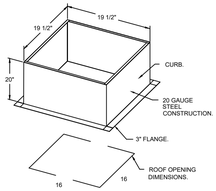

PITCHED CURBS ARE AVAILABLE FOR PITCHED ROOFS.
SPECIFY PITCH:
EXAMPLE: 7/12 PITCH = 30° SLOPE.
0"
12"
0"

BACKDRAFT DAMPER INSTALLATION

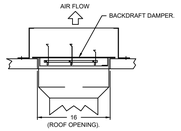

FANS #5 (EF-5 (SMOKER1)), #6 (EF-6 (SMOKER2)) - DU50HFA EXHAUST FAN

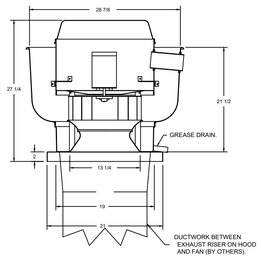

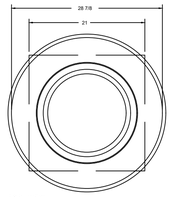

TOP VIEW

FEATURES:

- DIRECT DRIVE CONSTRUCTION (NO BELTS/PULLEYS).
- ROOF MOUNTED FANS.
- RESTAURANT MODEL.
- UL705 AND UL762 AND ULC-S645
- VARIABLE SPEED CONTROL.
- INTERNAL WIRING.
- THERMAL OVERLOAD PROTECTION (SINGLE PHASE).
- HIGH HEAT OPERATION 300°F (149°C).
- GREASE CLASSIFICATION TESTING.
- NEMA 3R SAFETY DISCONNECT SWITCH.

NORMAL TEMPERATURE TEST
EXHAUST FAN MUST OPERATE CONTINUOUSLY WHILE EXHAUSTING AIR AT 300°F (149°C) UNTIL ALL FAN PARTS HAVE REACHED THERMAL EQUILIBRIUM, AND WITHOUT ANY DETERIORATING EFFECTS TO THE FAN WHICH WOULD CAUSE UNSAFE OPERATION.

ABNORMAL FLARE-UP TEST
EXHAUST FAN MUST OPERATE CONTINUOUSLY WHILE EXHAUSTING BURNING GREASE VAPORS AT 600°F (316°C) FOR A PERIOD OF 15 MINUTES WITHOUT THE FAN BECOMING DAMAGED TO ANY EXTENT THAT COULD CAUSE AN UNSAFE CONDITION.

OPTIONS:

GREASE BOX.
FAN BASE CERAMIC SEAL - INSTALLED AT PLANT - FOR GREASE DUCTS.
2 YEAR PARTS WARRANTY.

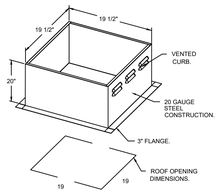

PITCHED CURBS ARE AVAILABLE FOR PITCHED ROOFS.
SPECIFY PITCH:
EXAMPLE: 7/12 PITCH = 30° SLOPE.
18"
12"
4"

GREASE DUCT & CHIMNEY SPECIFICATIONS:
PROVIDE GREASE DUCT EQUAL TO CAPTIVEAIRE SYSTEMS MODEL "DW" ROUND 20 GAUGE 430 STAINLESS STEEL DUCTWORK. MODEL "DW" IS LISTED TO UL-1978 AND IS INSTALLED USING "V" CLAMP LOCKING CONNECTIONS SEALED WITH 3M FIRE BARRIER 2000 PLUS. MODEL "DW" DOES NOT REQUIRE WELDING PROVIDING IT HAS BEEN INSTALLED PER THE MANUFACTURES INSTALLATION GUIDE.
PROVIDE RATED ACCESS DOORS AT EVERY CHANGE IN DIRECTION AND EVERY 12' ON CENTER. PER MANUFACTURES LISTING MODEL "DW" HORIZONTAL RUNS LESS THAN 75 FT. CAN BE SLOPED 1/16" PER 12", HORIZONTAL RUNS MORE THAN 75 FT. CAN BE SLOPED 3/16" PER 12".
DUCT SHOULD BE SLOPED AS MUCH AS POSSIBLE TO REDUCE THE CHANCE OF GREASE ACCUMULATION IN HORIZONTAL RUNS.

IF THE DUCT OR CHIMNEY IS WITHIN 18 INCHES OF COMBUSTIBLE MATERIAL, PROVIDE UL-2221 OR UL-103 HT LISTED DOUBLE WALL GREASE DUCT OR DOUBLE WALL CHIMNEY EQUAL TO CAPTIVEAIRE SYSTEMS MODEL "DW- 2R, 2R TYPE HT, 3R, OR 3Z" ROUND 20 GAUGE 430 STAINLESS INNER DUCT INSULATED WITH A 24 GAUGE 430 STAINLESS OUTER SHELL.

CAPTIVEAIRE SYSTEMS RECOMMENDS THE USE OF LISTED, PRE-FABRICATED ROUND GREASE EXHAUST DUCT TO REDUCE STATIC PRESSURE IN THE SYSTEM, MINIMIZE INSTALLATION AND INSPECTION TIMES, AND ENSURE DUCT IS LIQUID TIGHT

HVAC DISTRIBUTION NOTE

HIGH VELOCITY DIFFUSERS OR HVAC RETURNS SHOULD NOT BE PLACED WITHIN TEN (10) FEET OF THE EXHAUST HOOD. PERFORATED DIFFUSERS ARE RECOMMENDED.

1 / M4.2 CAPTIVEAIRE SCHEDULES AND DETAILS (OWNER FURNISHED - RECEIVED AND INSTALLED BY CONTRACTOR)
NO SCALE

REVISIONS

	DESCRIPTION	DATE:
1	Added RTU-1&2 and restroom fan	11/8/21
2		
3		
4		

CAPTIVEAIRE
www.captiveaire.com
National Accounts – Tampa
4519 George Road, Suite 150, Tampa, FL, 33634 PHONE: (813) 906-2112 EMAIL: reg840@captiveaire.com

Smokey Bones Rev1
45001 Schoenherr Rd,
Utica, MI, 48315

DATE: 10/22/2021
DWG.#: 5150263
DRAWN BY: Dan Luddy
SCALE: 1/2" = 1'-0"
MASTER DRAWING
SHEET NO. 3

IA ARCHITECTURE

SMOKEY BONES
UTICA, MI

CRUMB ENGINEERING
4609 Fairfield Street, Metairie, La 70006
P-504.455.4450, crumbengineering.com

COPYRIGHT
THESE DOCUMENTS ARE PROTECTED BY UNITED STATES COPYRIGHT LAW. THEY HAVE BEEN PREPARED SPECIFICALLY FOR THE PROJECT IDENTIFIED AND ARE NOT SUITABLE FOR USE ON ANY OTHER PROJECT OR AT ANY OTHER LOCATION WITHOUT THE EXPRESS WRITTEN APPROVAL AND PARTICIPATION OF ARCHITECTURE. REPRODUCTION OF THESE DOCUMENTS MUST BE AUTHORIZED BY THE ARCHITECT. ALL RIGHTS ARE RESERVED TO ARCHITECTURE.

STATE OF MICHIGAN
JASON T. CRUMB
License No. 6201070180
LICENSED PROFESSIONAL ENGINEER

REVISIONS NO.	DATE

PROJECT NO: IA 2119
SHEET M4.2

DATE 11/10/2021

FAN #8 CASRTU3-I.500-20-20T-DOAS - HEATER (KITCHEN DOAS)

NOTES:

1. DO NOT OBSTRUCT OUTSIDE AIR INLET, OUTSIDE AIR COIL OR OUTSIDE AIR FAN.
2. ( ) DENOTES CORNER WEIGHT.
3. ROOF OPENING MUST BE 2" SMALLER THAN CURB DIMENSIONS IN BOTH DIRECTIONS.

*NOTE: SUPPLY DUCT MUST BE INSTALLED TO MEET SMACNA STANDARDS. A MINIMUM STRAIGHT DUCT LENGTH MUST BE MAINTAINED DOWNSTREAM OF UNIT DISCHARGE AS OUTLINED IN AMCA PUBLICATION 201. WHEN USING RECTANGULAR DUCTWORK, ELBOWS MUST BE RADIUS THROAT, RADIUS BACK WITH TURNING VANES. FLEXIBLE DUCTWORK AND SQUARE THROAT/SQUARE BACK ELBOWS SHOULD NOT BE USED. ANY TRANSITION AND/OR TURNS IN THE DUCTWORK WILL CAUSE SYSTEM EFFECT. SYSTEM EFFECT WILL DRASTICALLY INCREASE STATIC PRESSURE AND REDUCE AIRFLOW. DO NOT RELY ON UNIT TO SUPPORT DUCT IN ANY WAY. FAILURE TO PROPERLY SIZE DUCTWORK MAY CAUSE SYSTEM EFFECTS AND REDUCE PERFORMANCE OF THE EQUIPMENT. SUGGESTED STRAIGHT DUCT SIZE IS 21.5" x 39".

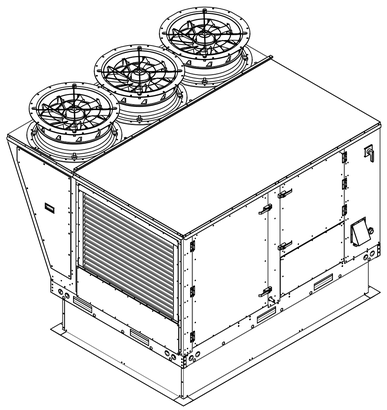

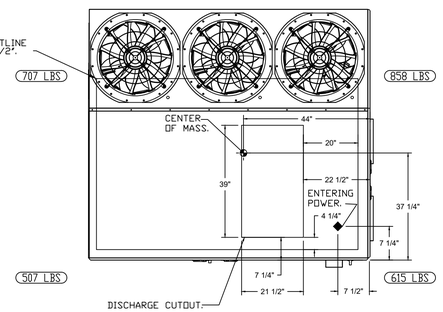

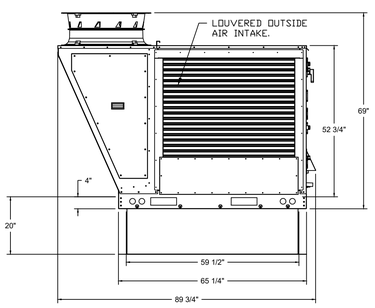

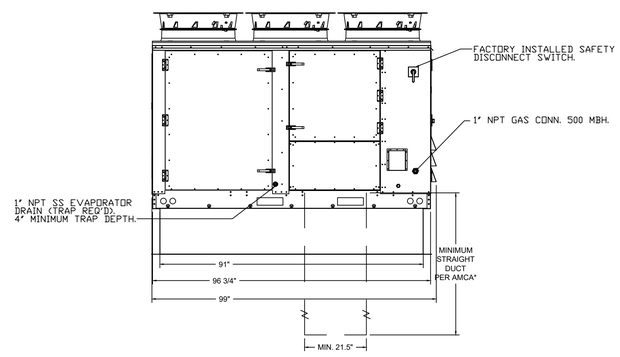

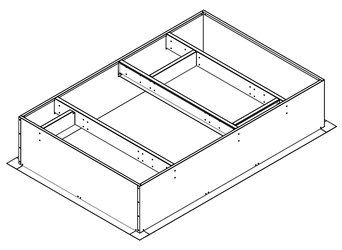

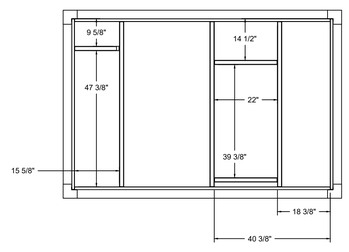

1 M4.3 CAPTIVEAIRE SCHEDULES AND DETAILS (OWNER FURNISHED - RECEIVED AND INSTALLED BY CONTRACTOR)
NO SCALE

OPTIONS
1. INLET PRESSURE GAUGE, 0-35".
2. MANIFOLD PRESSURE GAUGE, 0 TO 10" WC, 1 FURNACE.
3. RTU TOTAL CFM MONITORING.
4. SINGLE POINT ELECTRICAL CONNECTION FOR RTU. 750VA TRANSFORMER USED. IF A NON-DCV PREWIRE CONTROLS THIS UNIT, THE #28, #47, "MA", OR "E2" PREWIRE OPTION MUST BE SELECTED. DOES NOT PROVIDE SUPPLY STARTER IN PREWIRE.
5. CASLINK BUILDING MONITORING SYSTEM - INTERNET OR CELLULAR CONNECTION REQUIRED.
6. RTU3 DOWN DISCHARGE.
7. 2" MERV 13 FILTERS FOR RTU3 (QTY. 4).
8. 2" MERV 8 FILTERS FOR RTU3 (QTY. 4).
9. OVERHEAT STAT.
10. VFD FACTORY MOUNTED AND WIRED IN RTU COMMERCIAL CONTROL VESTIBULE.
11. RTU FIXED 100% OA INTAKE CONTROL.
12. RTU3 NO RETURN - 100% OA.
13. RTU3 CURB DUCT HANGER.
14. OCCUPIED SCHEDULING.
15. CLOGGED FILTER SWITCH - NOTIFICATION ON HMI.
16. RTU3 CONVENIENCE OUTLET (GFCI), 15 AMP - REQUIRES SEPARATE 120V CONNECTION. INCLUDES RECEPTACLE, COVER AND J-BOX.
17. FREEZESTAT.
18. REMOTE TEMPERATURE AND HUMIDITY SPACE SENSOR.
19. VAV PACKAGE W/ MANUAL/DDC CONTROL (571 VFD INCLUDED).
20. DUCT MOUNTED SMOKE DETECTOR - SHIPS LOOSE.
21. 20 TON MODULATING COOLING OPTION, 208/230V. R410A REFRIGERANT, VARIABLE SPEED COMPRESSOR, ECM CONDENSING FANS.
22. 20 TON MODULATING REHEAT OPTION - SPACE DEWPOINT CONTROL.
23. 5 YEAR ENTIRE UNIT PARTS WARRANTY, 10 YEAR ENTIRE UNIT PARTS WARRANTY WITH REMOTE MONITORING AND CAPTIVEAIRE SERVICE CONTRACT, 25 YEAR STAINLESS STEEL FURNACE PARTS WARRANTY (SEE ADDITIONAL DETAILS).

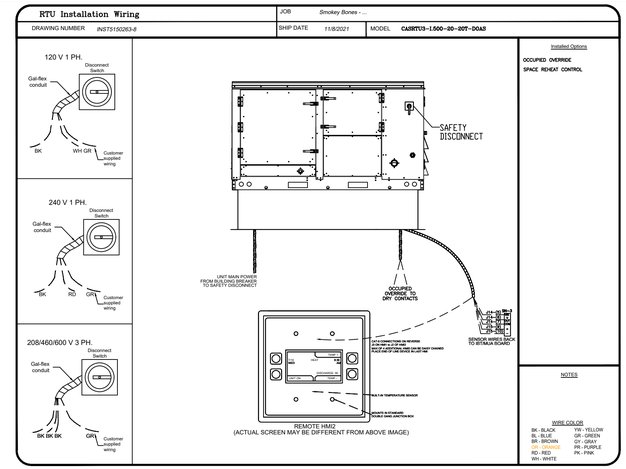

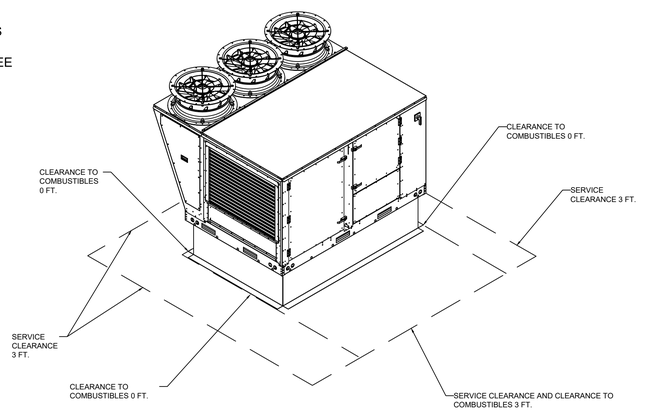

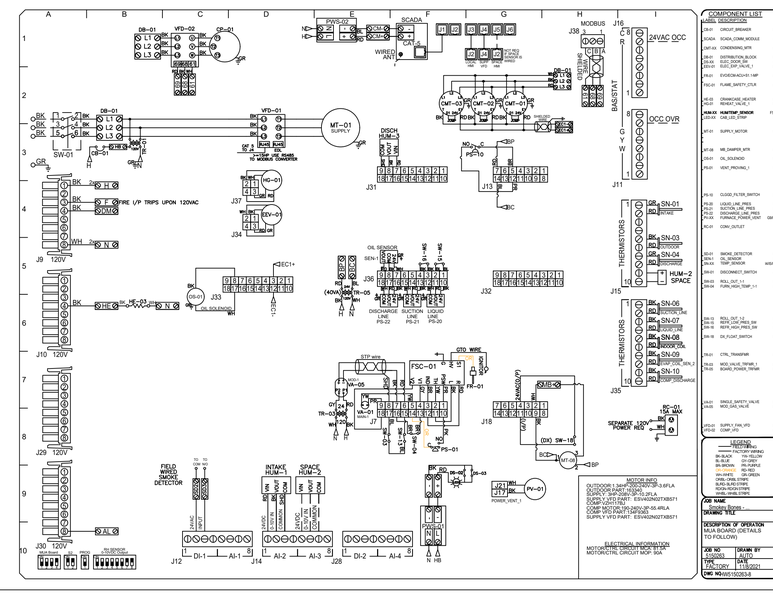

REVISIONS

	DESCRIPTION	DATE:
1	Added RTU-1&2 and restroom fan	11/8/21
2		
3		
4		

CAPTIVEAIRE
www.captiveaire.com
National Accounts – Tampa
4519 George Road, Suite 150, Tampa, FL 33634 PHONE: (813) 906-2112 EMAIL: reg840@captiveaire.com

Smokey Bones Rev1
45001 Schoenherr Rd,
Utica, MI, 48315

DATE: 10/22/2021
DWG.#: 5150263
DRAWN BY: Dan Luddy
SCALE: 1/2" = 1'-0"
MASTER DRAWING
SHEET NO. 4

iARCHITECTURE

SMOKEY BONES
UTICA, MI

CRUMB ENGINEERING
4609 Fairfield Street Metairie, La 70006
P-504.455.4450 crumbengineering.com

COPYRIGHT
THESE DOCUMENTS ARE PROTECTED BY UNITED STATES COPYRIGHT LAW. THEY HAVE BEEN PREPARED SPECIFICALLY FOR THE PROJECT IDENTIFIED AND ARE NOT SUITABLE FOR USE ON ANY OTHER PROJECT OR AT ANY OTHER LOCATION WITHOUT THE EXPRESS WRITTEN APPROVAL AND PARTICIPATION OF IARCHITECTURE. REPRODUCTION OF THESE DOCUMENTS MUST BE AUTHORIZED BY THE ARCHITECT. ALL RIGHTS ARE RESERVED TO IARCHITECTURE.

STATE OF MICHIGAN
JASON T. CRUMB
License No. 6201070180
LICENSED PROFESSIONAL ENGINEER

REVISIONS NO.	DATE

PROJECT NO: IA 2119
SHEET M4.3

DATE 11/10/2021

FAN #9 (RTU-1) - CASRTU3-I.400-24-15T-DOAS HEATER

NOTES:

1. DO NOT OBSTRUCT OUTSIDE AIR INLET, OUTSIDE AIR COIL OR OUTSIDE AIR FAN.
2. ( ) DENOTES CORNER WEIGHT.
3. ROOF OPENING MUST BE 2" SMALLER THAN CURB DIMENSIONS IN BOTH DIRECTIONS.

*NOTE: SUPPLY DUCT MUST BE INSTALLED TO MEET SMACNA STANDARDS. A MINIMUM STRAIGHT DUCT LENGTH MUST BE MAINTAINED DOWNSTREAM OF UNIT DISCHARGE AS OUTLINED IN AMCA PUBLICATION 201. WHEN USING RECTANGULAR DUCTWORK, ELBOWS MUST BE RADIUS THROAT, RADIUS BACK WITH TURNING VANES. FLEXIBLE DUCTWORK AND SQUARE THROAT/SQUARE BACK ELBOWS SHOULD NOT BE USED. ANY TRANSITION AND/OR TURNS IN THE DUCTWORK WILL CAUSE SYSTEM EFFECT. SYSTEM EFFECT WILL DRASTICALLY INCREASE STATIC PRESSURE AND REDUCE AIRFLOW. DO NOT RELY ON UNIT TO SUPPORT DUCT IN ANY WAY. FAILURE TO PROPERLY SIZE DUCTWORK MAY CAUSE SYSTEM EFFECTS AND REDUCE PERFORMANCE OF THE EQUIPMENT.
SUGGESTED STRAIGHT DUCT SIZE IS 21.5" x 39".

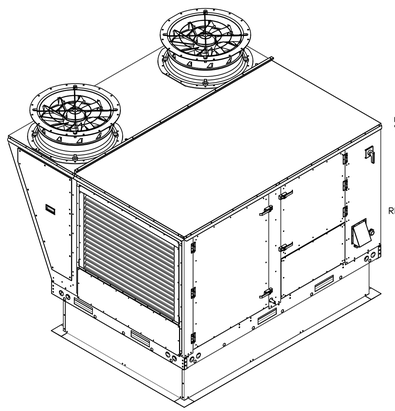

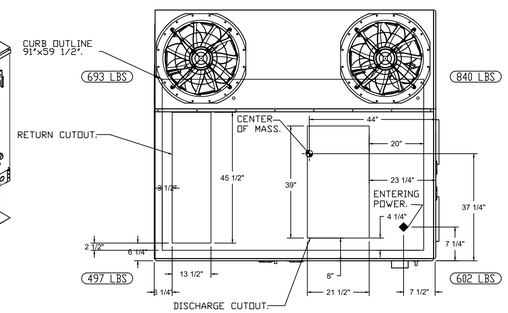

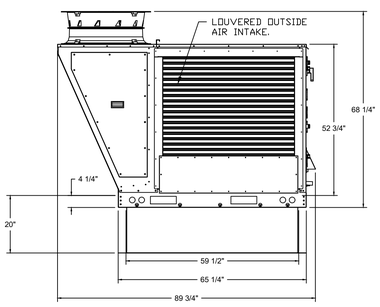

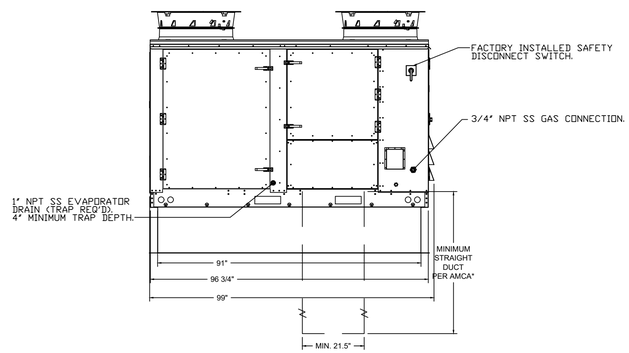

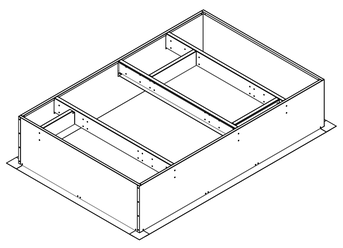

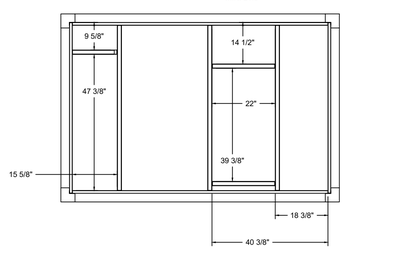

1 M4.3 CAPTIVEAIRE SCHEDULES AND DETAILS (OWNER FURNISHED - RECEIVED AND INSTALLED BY CONTRACTOR)
NO SCALE

OPTIONS
1. INLET PRESSURE GAUGE, 0-35".
2. MANIFOLD PRESSURE GAUGE, 0 TO 10" WC, 1 FURNACE.
3. RTU TOTAL CFM MONITORING.
4. SINGLE POINT ELECTRICAL CONNECTION FOR RTU. 750VA TRANSFORMER USED. IF A NON-DCV PREWIRE CONTROLS THIS UNIT, THE #28, #47, "MA", OR "E2" PREWIRE OPTION MUST BE SELECTED. DOES NOT PROVIDE SUPPLY STARTER IN PREWIRE.
5. CASLINK BUILDING MONITORING SYSTEM - INTERNET OR CELLULAR CONNECTION REQUIRED.
6. LOW AMBIENT COOLING OPERATION - DOWN TO 15F AMBIENT.
7. RTU3 DOWN DISCHARGE.
8. 2" MERV 13 FILTERS FOR RTU3 (QTY. 4).
9. 2" MERV 8 FILTERS FOR RTU3 (QTY. 4).
10. OVERHEAT STAT.
11. VFD FACTORY MOUNTED AND WIRED IN RTU COMMERCIAL CONTROL VESTIBULE.
12. FREEZESTAT.
13. OCCUPIED SCHEDULING.
14. RTU3 CURB DUCT HANGER.
15. RTU RETURN MOUNTED SMOKE DETECTOR AND SAMPLING TUBE - FACTORY INSTALLED.
16. CLOGGED FILTER SWITCH - NOTIFICATION ON HMI.
17. SUPPLY DUCT ADJUSTMENT.
18. RTU3 CONVENIENCE OUTLET (GFCI), 15 AMP - REQUIRES SEPARATE 120V CONNECTION. INCLUDES RECEPTACLE, COVER AND J-BOX.
19. 15 TON MODULATING COOLING OPTION, 208/230V. R410A REFRIGERANT, VARIABLE SPEED COMPRESSOR, ECM CONDENSING FANS.
20. 15 TON MODULATING REHEAT OPTION - SPACE DEWPOINT CONTROL.
21. RTU INTAKE/RETURN DAMPER - MANUAL CONTROL VIA HMI.
22. RTU3 DOWN RETURN.
23. VAV PACKAGE W/ MANUAL/DDC CONTROL (571 VFD INCLUDED).
24. 5 YEAR ENTIRE UNIT PARTS WARRANTY, 10 YEAR ENTIRE UNIT PARTS WARRANTY WITH REMOTE MONITORING AND CAPTIVEAIRE SERVICE CONTRACT, 25 YEAR STAINLESS STEEL FURNACE PARTS WARRANTY (SEE ADDITIONAL DETAILS).

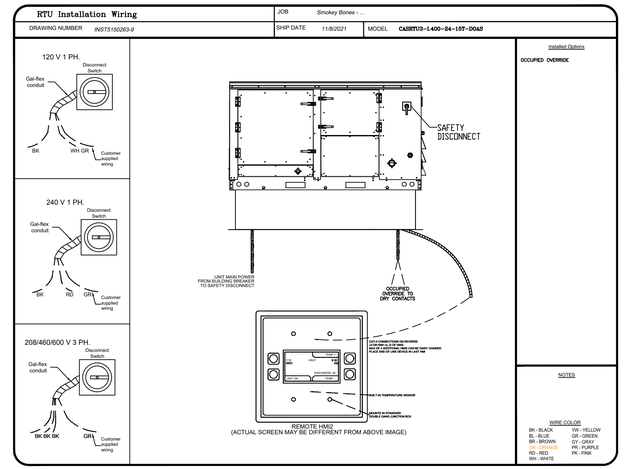

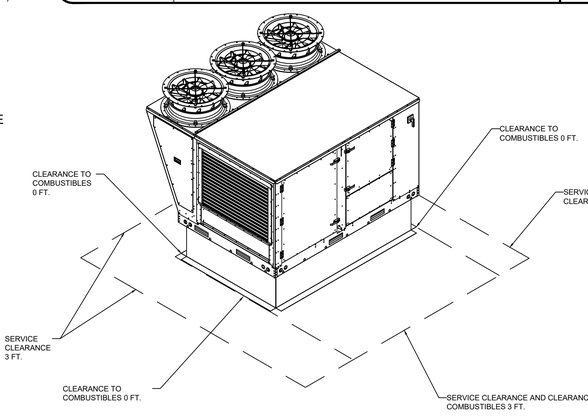

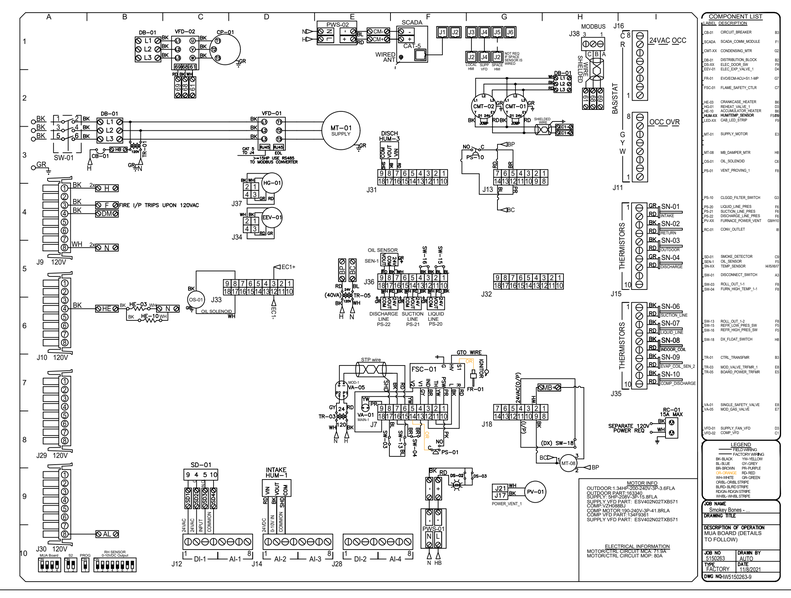

REVISIONS

	DESCRIPTION	DATE:
1	Added RTU-1&2 and restroom fan	11/8/21
2		
3		
4		

CAPTIVEAIRE
www.captiveaire.com
National Accounts – Tampa
4519 George Road, Suite 150, Tampa, FL 33634 PHONE: (813) 906-2112 EMAIL: reg840@captiveaire.com

Smokey Bones Rev1
45001 Schoenherr Rd,
Utica, MI, 48315

DATE: 10/22/2021
DWG.#: 5150263
DRAWN BY: Dan Luddy
SCALE: 1/2" = 1'-0"
MASTER DRAWING
SHEET NO. 5

iARCHITECTURE
SMOKEY BONES
UTICA, MI

CRUMB ENGINEERING
4609 Fairfield Street
P-504.455.4450
Metairie, La 70006
crumbengineering.com

COPYRIGHT
THESE DOCUMENTS ARE PROTECTED BY UNITED STATES COPYRIGHT LAW. THEY HAVE BEEN PREPARED SPECIFICALLY FOR THE PROJECT IDENTIFIED AND ARE NOT SUITABLE FOR USE ON ANY OTHER PROJECT OR AT ANY OTHER LOCATION WITHOUT THE EXPRESS WRITTEN APPROVAL AND PARTICIPATION OF IARCHITECTURE. REPRODUCTION OF THESE DOCUMENTS MUST BE AUTHORIZED BY THE ARCHITECT. ALL RIGHTS ARE RESERVED TO IARCHITECTURE.

STATE OF MICHIGAN
JASON T. CRUMB
License No. 6201070180
LICENSED PROFESSIONAL ENGINEER

REVISIONS NO.	DATE

PROJECT NO: IA 2119
SHEET M4.4

DATE 11/10/2021

FAN #10 (RTU-2) - CASRTU3-I.400-24-15T-DOAS HEATER

NOTES:

1. DO NOT OBSTRUCT OUTSIDE AIR INLET, OUTSIDE AIR COIL OR OUTSIDE AIR FAN.
2. ( ) DENOTES CORNER WEIGHT.
3. ROOF OPENING MUST BE 2" SMALLER THAN CURB DIMENSIONS IN BOTH DIRECTIONS.

*NOTE: SUPPLY DUCT MUST BE INSTALLED TO MEET SMACNA STANDARDS. A MINIMUM STRAIGHT DUCT LENGTH MUST BE MAINTAINED DOWNSTREAM OF UNIT DISCHARGE AS OUTLINED IN AMCA PUBLICATION 201. WHEN USING RECTANGULAR DUCTWORK, ELBOWS MUST BE RADIUS THROAT, RADIUS BACK WITH TURNING VANES. FLEXIBLE DUCTWORK AND SQUARE THROAT/SQUARE BACK ELBOWS SHOULD NOT BE USED. ANY TRANSITION AND/OR TURNS IN THE DUCTWORK WILL CAUSE SYSTEM EFFECT. SYSTEM EFFECT WILL DRASTICALLY INCREASE STATIC PRESSURE AND REDUCE AIRFLOW. DO NOT RELY ON UNIT TO SUPPORT DUCT IN ANY WAY. FAILURE TO PROPERLY SIZE DUCTWORK MAY CAUSE SYSTEM EFFECTS AND REDUCE PERFORMANCE OF THE EQUIPMENT.
SUGGESTED STRAIGHT DUCT SIZE IS 21.5" x 39".

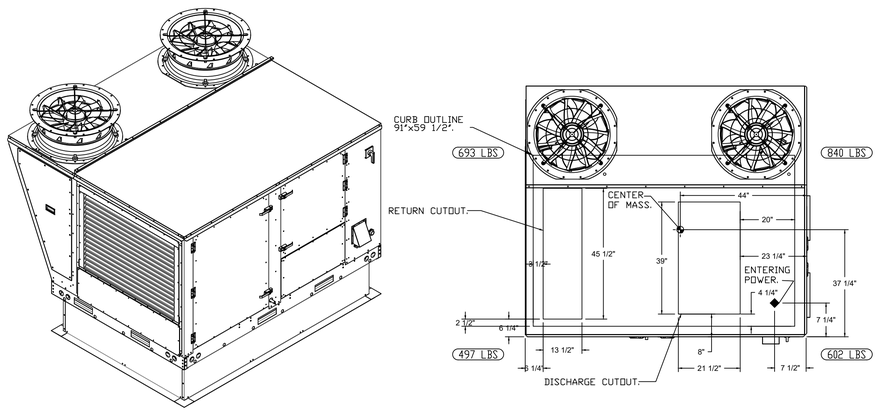

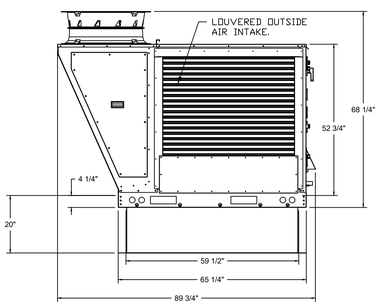

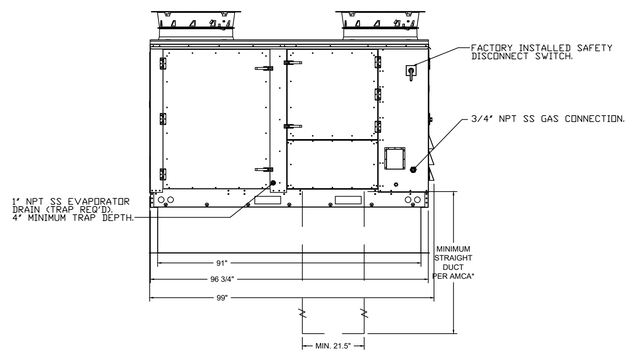

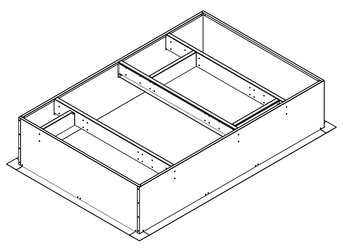

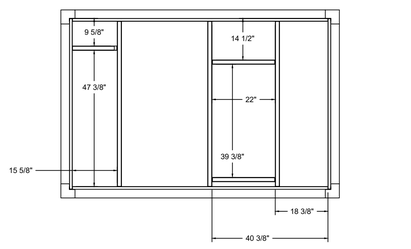

1 / M4.3 CAPTIVEAIRE SCHEDULES AND DETAILS (OWNER FURNISHED - RECEIVED AND INSTALLED BY CONTRACTOR)
NO SCALE

OPTIONS
1. INLET PRESSURE GAUGE, 0-35".
2. MANIFOLD PRESSURE GAUGE, 0 TO 10" WC, 1 FURNACE.
3. RTU TOTAL CFM MONITORING.
4. SINGLE POINT ELECTRICAL CONNECTION FOR RTU. 750VA TRANSFORMER USED. IF A NON-DCV PREWIRE CONTROLS THIS UNIT, THE #28, #47, "MA", OR "E2" PREWIRE OPTION MUST BE SELECTED. DOES NOT PROVIDE SUPPLY STARTER IN PREWIRE.
5. CASLINK BUILDING MONITORING SYSTEM - INTERNET OR CELLULAR CONNECTION REQUIRED.
6. LOW AMBIENT COOLING OPERATION - DOWN TO 15F AMBIENT.
7. RTU3 DOWN DISCHARGE.
8. 2" MERV 13 FILTERS FOR RTU3 (QTY. 4).
9. 2" MERV 8 FILTERS FOR RTU3 (QTY. 4).
10. OVERHEAT STAT.
11. VFD FACTORY MOUNTED AND WIRED IN RTU COMMERCIAL CONTROL VESTIBULE.
12. FREEZESTAT.
13. OCCUPIED SCHEDULING.
14. RTU3 CURB DUCT HANGER.
15. RTU RETURN MOUNTED SMOKE DETECTOR AND SAMPLING TUBE - FACTORY INSTALLED.
16. CLOGGED FILTER SWITCH - NOTIFICATION ON HMI.
17. SUPPLY DUCT ADJUSTMENT.
18. RTU3 CONVENIENCE OUTLET (GFCI), 15 AMP - REQUIRES SEPARATE 120V CONNECTION. INCLUDES RECEPTACLE, COVER AND J-BOX.
19. 15 TON MODULATING COOLING OPTION, 208/230V. R410A REFRIGERANT, VARIABLE SPEED COMPRESSOR, ECM CONDENSING FANS.
20. 15 TON MODULATING REHEAT OPTION - SPACE DEWPOINT CONTROL.
21. RTU INTAKE/RETURN DAMPER - MANUAL CONTROL VIA HMI.
22. RTU3 DOWN RETURN.
23. VAV PACKAGE W/ MANUAL/DDC CONTROL (571 VFD INCLUDED).
24. 5 YEAR ENTIRE UNIT PARTS WARRANTY, 10 YEAR ENTIRE UNIT PARTS WARRANTY WITH REMOTE MONITORING AND CAPTIVEAIRE SERVICE CONTRACT, 25 YEAR STAINLESS STEEL FURNACE PARTS WARRANTY (SEE ADDITIONAL DETAILS).

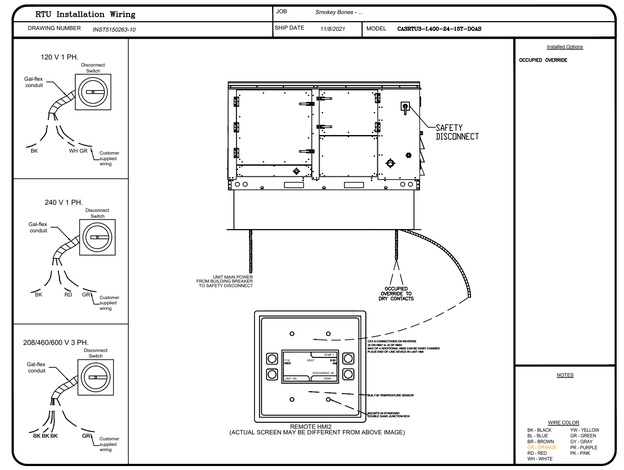

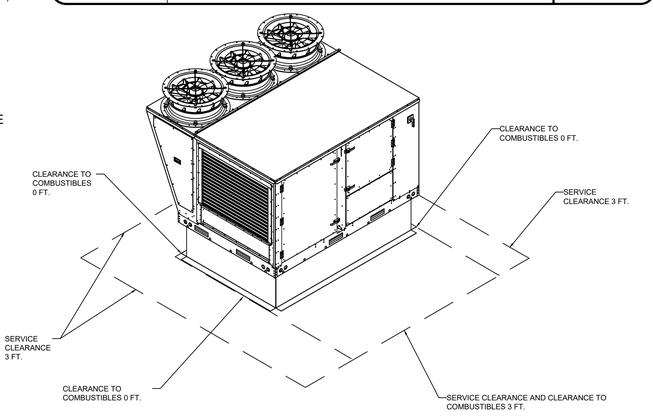

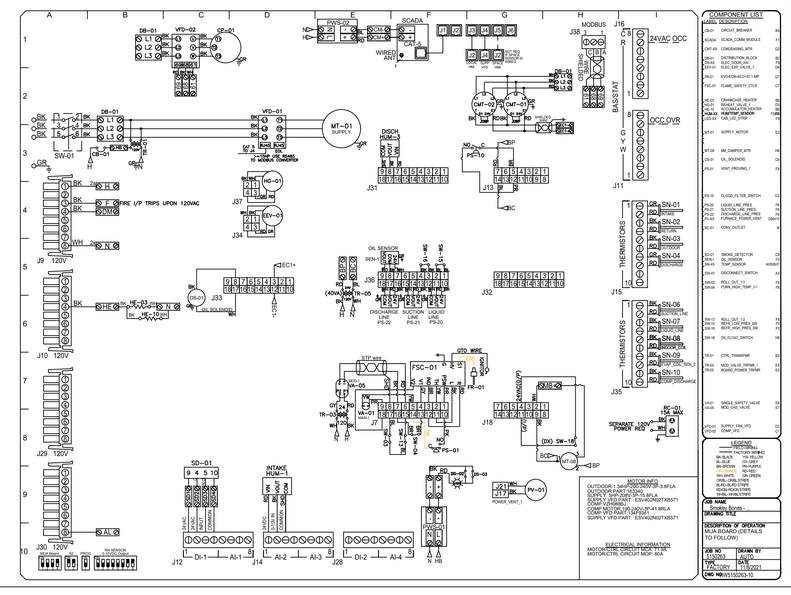

REVISIONS

	DESCRIPTION	DATE:
1	Added RTU-1&2 and restroom fan	11/8/21
2		
3		
4		

CAPTIVEAIRE
www.captiveaire.com
National Accounts – Tampa
4519 George Road, Suite 150, Tampa, FL, 33634 PHONE: (813) 906-2112 EMAIL: reg840@captiveaire.com

Smokey Bones Rev1
45001 Schoenherr Rd,
Utica, MI, 48315

DATE: 10/22/2021
DWG.#: 5150263
DRAWN BY: Dan Luddy
SCALE: 1/2" = 1'-0"
MASTER DRAWING
SHEET NO. 6

IA ARCHITECTURE

SMOKEY BONES
UTICA, MI

CRUMB ENGINEERING
4609 Fairfield Street
P-504.455.4450
Metairie, La 70006
crumbengineering.com

COPYRIGHT
THESE DOCUMENTS ARE PROTECTED BY UNITED STATES COPYRIGHT LAW. THEY HAVE BEEN PREPARED SPECIFICALLY FOR THE PROJECT IDENTIFIED AND ARE NOT SUITABLE FOR USE ON ANY OTHER PROJECT OR AT ANY OTHER LOCATION WITHOUT THE EXPRESS WRITTEN APPROVAL AND PARTICIPATION OF IARCHITECTURE. REPRODUCTION OF THESE DOCUMENTS MUST BE AUTHORIZED BY THE ARCHITECT. ALL RIGHTS ARE RESERVED TO IARCHITECTURE.

STATE OF MICHIGAN
JASON T. CRUMB
License No. 6201070180
LICENSED PROFESSIONAL ENGINEER

REVISIONS NO.	DATE

PROJECT NO: IA 2119
SHEET M4.5

DATE 11/10/2021

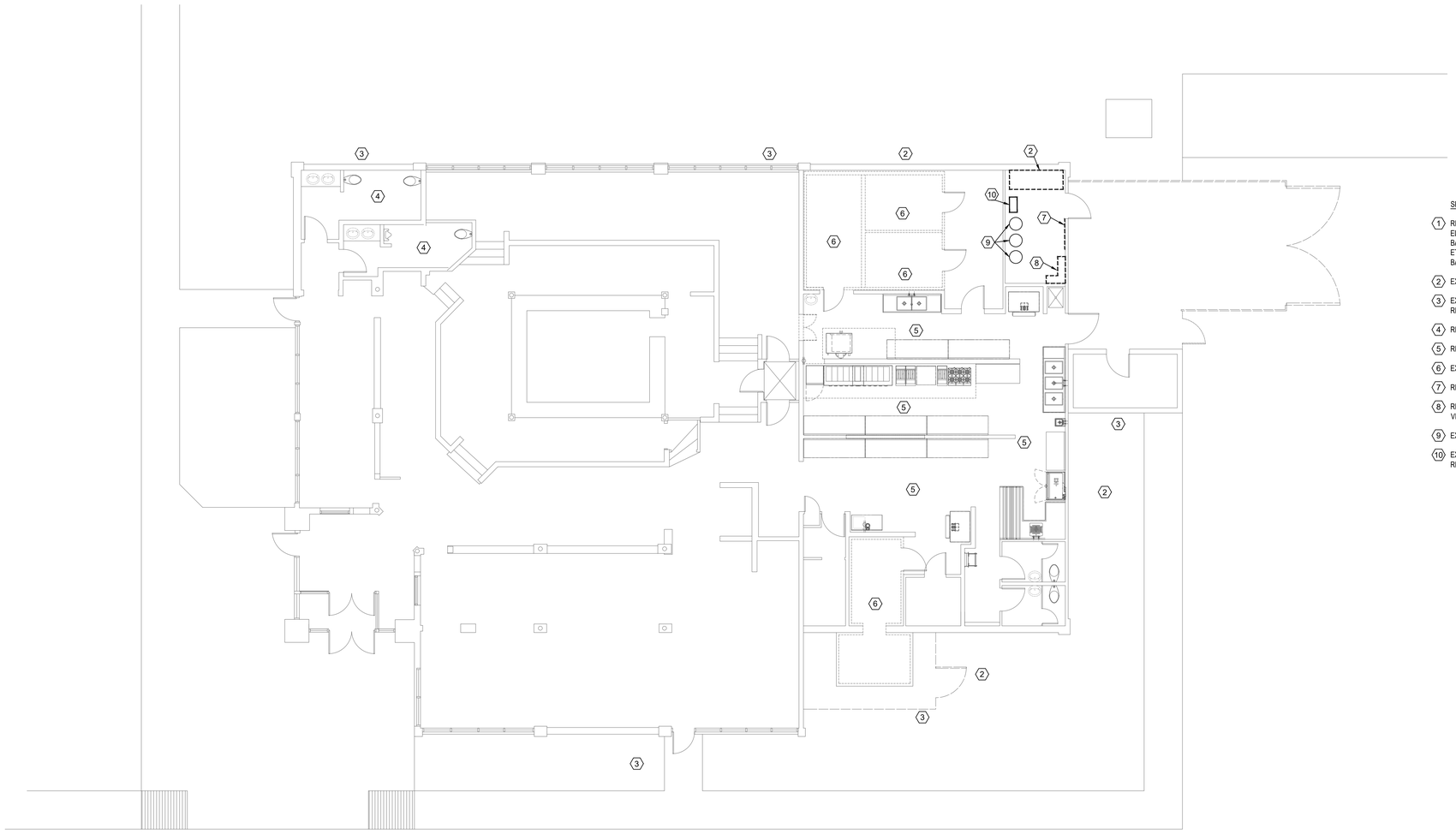

SPECIFIC NOTES THIS SHEET:

1. REMOVE ALL MEP ITEMS THROUGHOUT BUILDING UNLESS NOTED OTHERWISE. MAIN ELECTRICAL SERVICE, MAIN GAS SERVICE, SPRINKLER RISER, DOMESTIC WATER RISER AND BACKFLOW PREVENTER TO REMAIN. ALL DUCTWORK, PIPING, CONDUIT, WIRING, FIXTURES, ETC. TO BE REMOVED. VERIFY ON SITE. EXISTING FIRE AND DOMESTIC RISERS INCLUDING BACKFLOW DEVICES TO REMAIN.
2. EXISTING EXTERIOR LIGHTS AND RECEPTACLES TO REMAIN.
3. EXISTING HOSE BIBBS TO REMAIN. CONNECT TO NEW WATER PIPING. VERIFY EXACT REQUIREMENTS ON SITE.
4. REMOVE ALL TOILET ROOM FIXTURES AND PIPING.
5. REMOVE ALL KITCHEN EQUIPMENT PIPING AND POWER.
6. EXISTING COOLER TO REMAIN. CONNECT POWER TO NEW PANELS. VERIFY ON SITE.
7. REMOVE EXISTING I.T. MAIN INCOMING SERVICE TO REMAIN.
8. REMOVE EXISTING MAIN PANELS, ETC. REFEED EXISTING EXTERIOR LIGHTS TO PANEL "L". VERIFY ON SITE.
9. EXISTING WATER HEATERS AND WATER SOFTENER TO BE REMOVED.
10. EXISTING GAS UNIT HEATER TO REMAIN. CONNECT TO NEW GAS AND POWER PANELS. VERIFY REQUIREMENTS ON SITE.

1 MEP1.0 FLOOR PLAN - DEMOLITION
1/8" = 1'-0"

iARCHITECTURE

SMOKEY BONES
UTICA, MI

CRUMB ENGINEERING
4609 Fairfield Street
P-504.455.4450
Metairie, La 70006
crumbengineering.com

COPYRIGHT
THESE DOCUMENTS ARE PROTECTED BY UNITED STATES COPYRIGHT LAW. THEY HAVE BEEN PREPARED SPECIFICALLY FOR THE PROJECT IDENTIFIED AND ARE NOT SUITABLE FOR USE ON ANY OTHER PROJECT OR AT ANY OTHER LOCATION WITHOUT THE EXPRESS WRITTEN APPROVAL AND PARTICIPATION OF iARCHITECTURE. REPRODUCTION OF THESE DOCUMENTS MUST BE AUTHORIZED BY THE ARCHITECT. ALL RIGHTS ARE RESERVED TO iARCHITECTURE.

STATE OF MICHIGAN
JASON T. CRUMB
License No. 6201070180
LICENSED PROFESSIONAL ENGINEER

REVISIONS	
NO.	DATE

PROJECT NO: IA 2119

SHEET MEP1.0

DATE 11/10/2021

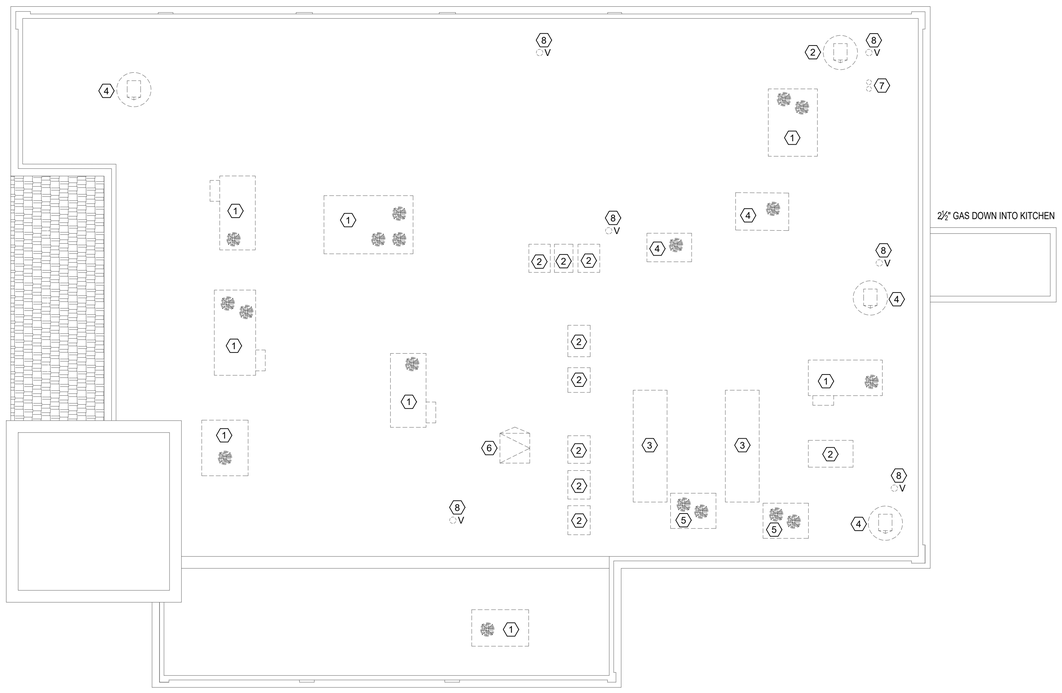

SPECIFIC NOTES THIS SHEET:

1. REMOVE EXISTING RTU, GAS PIPING, CONDENSATE DRAIN PIPING, ELECTRICAL BACK TO PANEL AND CONTROL WIRING.
2. EXISTING REFRIGERATION EQUIPMENT TO REMAIN IF SERVING COOLER/ FREEZER TO REMAIN INTEGRAL POWER AND RUN TO PANEL P. VERIFY ON SITE. REMOVE EQUIPMENT AND POWER CONNECTED TO ITEMS BEING DEMOLISHED.
3. MAKE-UP FAN TO BE REMOVED. REMOVE POWER, GAS PIPING AND CONTROLS.
4. REMOVE EXISTING FAN, POWER, CONTROLS AND DUCTWORK.
5. REMOVE EXISTING CONDENSING UNIT, POWER, PIPING AND CONTROLS.
6. REMOVE SATELLITE DISH.
7. REMOVE EXISTING WATER HEATER FLUES.
8. REMOVE EXISTING VENT PIPING. REMOVE AT CONTRACTOR'S OPTION.

1 / MEP1.1 ROOF PLAN - DEMOLITION
1/8" = 1'-0"

iARCHITECTURE

SMOKEY BONES
UTICA, MI

CRUMB ENGINEERING
4609 Fairfield Street
P-504.455.4450
Metairie, La 70006
crumbengineering.com

COPYRIGHT
THESE DOCUMENTS ARE PROTECTED BY UNITED STATES COPYRIGHT LAW. THEY HAVE BEEN PREPARED SPECIFICALLY FOR THE PROJECT IDENTIFIED AND ARE NOT SUITABLE FOR USE ON ANY OTHER PROJECT OR AT ANY OTHER LOCATION WITHOUT THE EXPRESS WRITTEN APPROVAL AND PARTICIPATION OF IARCHITECTURE. REPRODUCTION OF THESE DOCUMENTS MUST BE AUTHORIZED BY THE ARCHITECT. ALL RIGHTS ARE RESERVED TO IARCHITECTURE.

STATE OF MICHIGAN
JASON T. CRUMB
License No. 6201070140
LICENSED PROFESSIONAL ENGINEER

REVISIONS	
NO.	DATE

PROJECT NO: IA 2119

SHEET MEP1.1

DATE 11/10/2021

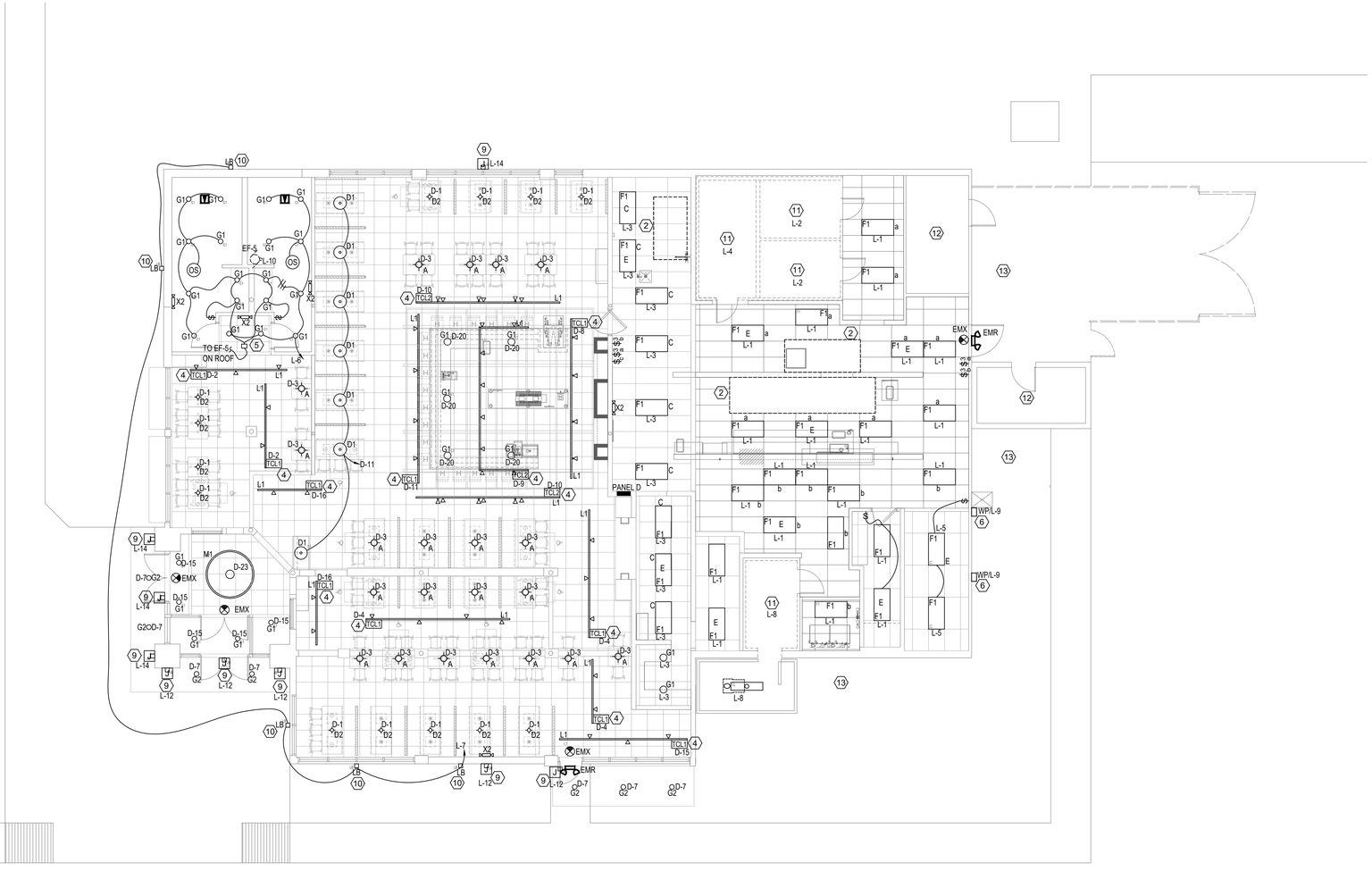

GENERAL NOTES THIS SHEET:

1. ALL FIXTURES SHALL BE INSTALLED LEVEL AND TRUE, CENTER FIXTURES WHERE APPLICABLE. REFER TO ARCHITECT'S REFLECTED CEILING PLAN AND ARCHITECT'S ELEVATIONS FOR FIXTURE LOCATIONS.
2. INSTALL FIXTURES IN ACCORDANCE WITH MANUFACTURER'S RECOMMENDATIONS. PROVIDE ALL NECESSARY WIRING, SWITCHES AND MOUNTING HARDWARE.
3. ALL CONDUIT SHALL BE 1/2" WITH 2-#12 AWG & 1-#12 GRD UNLESS NOTED OTHERWISE. WIRE MULTI-WAY SWITCHES AND LIGHTING CONTROLS IN ACCORDANCE WITH THE PRODUCT LITERATURE.
4. FOR CONDUIT RUNS EXCEEDING 75', INCREASE TO #10 AWG CONDUCTORS.
5. GROUNDING SHALL BE IN ACCORDANCE WITH NEC ART. 250.
6. PROVIDE LED EXIT FIXTURES AT ALL LOCATIONS AS SHOWN ON THE LIFE SAFETY PLAN.
7. PROVIDE UNSWITCHED HOT CONDUCTOR TO ALL EXIT AND EMERGENCY FIXTURES.
10. PROVIDE DIMMING SWITCHES COMPATIBLE WITH DIMMABLE FIXTURES. COORDINATE WIRING AND INSTALLATION WITH MANUFACTURER'S RECOMMENDATIONS.
11. LIGHT FIXTURES FOR EXHAUST HOODS SHALL BE SUPPLIED BY KITCHEN HOOD SUPPLIER.
12. ALL EXIT AND EMERGENCY FIXTURES (EMX, EMC, EMR) SHALL BE HOME RUN TO PANEL 'D' CIRCUIT D-25. CIRCUIT 25 IS CONSTANT ON, NON-DIMMING LOCKABLE BREAKER.
13. EXISTING EXTERIOR LIGHTING TO REMAIN. CAPTURE EXTERIOR LIGHTING CIRCUITS AND WIRE TO NEW PANELS AS INDICATED.
14. LIGHT FIXTURES WITH 'E' DESIGNATION SHALL BE PROVIDED WITH EMERGENCY BALLAST AND SHALL HAVE UNSWITCHED HOT CONDUCTOR FROM LIGHTING CIRCUIT RUN TO EMERGENCY BALLAST.

SPECIFIC NOTES THIS SHEET:

1. EXISTING LIGHT, SWITCHING, AND LIGHTING CIRCUIT TO REMAIN. LIGHTS WITH 'E' DESIGNATION HAVE EMERGENCY BATTERY.
2. KITCHEN HOOD.
3. DIMMER CONTROL PANEL.
4. TRACK CURRENT LIMITING DEVICE SUPPLIED BY OWNER, INSTALLED BY CONTRACTOR.
   - TCL1 - 120 WATTS
   - TCL2 - 240 WATTS
5. SINGLE POLE RELAY, 120V, 20A IN NEMA-1 ENCLOSURE ABOVE ACCESSIBLE CEILING. RELAY CONTROLLED BY TOILET LIGHTING (CIRCUIT L-6). LIGHTS "ON", FAN "ON".
6. MOUNT UNDER SHED ROOF.
7. POWER FOR WALL ART LIGHTING. PROVIDE JUNCTION BOX.
8. HOMERUN TO PANEL P. PROVIDE 20A, 1P BREAKER. VERIFY REQUIREMENTS ON SITE.
9. POWER FOR EXTERIOR SIGNAGE. VERIFY POWER REQUIREMENTS WITH VENDOR.
10. POWER FOR LIGHT BAND. VERIFY POWER REQUIREMENTS WITH VENDOR.
11. EXISTING COOLER/ FREEZER. INTERCEPT CIRCUIT AND WIRED TO INDICATED PANEL.
12. EXISTING EQUIPMENT ROOM. CAPTURE CIRCUIT AND WIRE TO L-5.
13. CAPTURE EXTERIOR LIGHTING CIRCUIT THIS AREA AND WIRE TO L-9. VERIFY ON SITE.

1 / E1.0 FLOOR PLAN - LIGHTING
1/8" = 1'-0"

REFLECTED CEILING PLAN SYMBOL LEGEND

A		PENDANT LIGHT FIXTURE MANUFACTURER: HI-LITE MFG. CO. MODEL #: H-VLSBPNT1 DIMENSIONS: 8 1/2"H x 12"Ø FINISH: OLD NICKEL LAMP: 11.5W LED A19 REMARKS:	MOUNT FIXTURES TO UNISTRUT SUPPORT ABOVE -PAINT UNISTRUT & THREADED RODS 'BLACK' P-7
G1		6"Ø RECESSED DOWNLIGHT MANUFACTURER: HALO COMMERCIAL HOUSING MODEL #: HALO HC6 6" CAN LAMP: HALO HM6-12-835 (6" LED MODULE, 1,000 LUMENS, 80 CRI, 3500K CCT)	PAINT TRIMS TO MATCH ADJACENT SURFACES
G2		6"Ø LED EXTERIOR CAN LIGHT MANUFACTURER: HALO COMMERCIAL HOUSING MODEL #: HALO HC6 6" CAN LAMP: HALO HM6-12-835 (6" LED MODULE, 1,000 LUMENS, 80 CRI, 3500K CCT)	UL WET RATED TRIM AND BAFFLES REQUIRED
M1		CUSTOM WHEEL LIGHT FIXTURE MANUFACTURER: HI-LITE MFG. CO. MODEL #: H-VLSMTRIV8-4 DIMENSIONS: 72"Ø X 12"H FINISH: 117-PAINTED STEEL REMARKS: MOUNTED ON STEM W/4 AIRCRAFT CABLES 120V	
S1	X	EXTERIOR GARDEN STRING LIGHTING MANUFACTURER: AMERICAN LIGHTING MODEL #: LS2-MS-24-48-BK DIMENSIONS: ~80'-0" TOTAL LENGTH FINISH: BLACK	
D1		PENDANT LIGHT FIXTURE MANUFACTURER: Hi-LITE MFG. CO. MODEL #: H-VLSBBMP-3 DIMENSIONS: 12"H x 19"Ø FINISH: BK01 BLACK (EXT), 156 RED/ORANGE (INT), 91 BLACK (CANOPY) LAMP: 200W	
D2		PENDANT LIGHT FIXTURE MANUFACTURER: CONTECH LIGHTING MODEL #: OFG308 DIMENSIONS: 10 1/8"H x 4 3/4"Ø FINISH: RED LAMP: TBD	
F1		2x4 LED LIGHT FIXTURE MANUFACTURER: METALUX MODEL #: 24CGT4532C REMARKS: 2X4 LED LAY-IN	
L1		MONOPOINT/TRACK LIGHTING MANUFACTURER: JUNO MODEL #: R600L-G2-30K-80CRI-PDIM-FL-BL / T8BL / T4BL / T38BL / T23BL FINISH: BLACK LAMP: 10W LED REMARKS: -SEE GENERAL NOTES & INTERIOR ELEVATIONS FOR MOUNTING INFORMATION -PROVIDE 24" INCREMENTS IN LENGTH (F.V.) -B/O TRACK @ 11'-0" A.F.F. (TYP.)	
JB	J	JUNCTION BOX SIGN POWER PROVIDE POWER FOR ILLUMINATED SIGNAGE COORDINATE WITH SIGNAGE COMPANY	
LB		JUNCTION BOX LIGHTBAND POWER PROVIDE POWER FOR ILLUMINATED LIGHTBAND COORDINATE WITH SIGNAGE COMPANY	
X2		EMERGENCY FIXTURE MANUFACTURER: COOPER MODEL #: SURE LITES CUI SERIES FINISH: FRONT OF HOUSE - BLACK, BACK OF HOUSE - WHITE LAMP: TBD	
CL		COOLER LIGHT BY COOLER MANUFACTURER	
WP		HID WALL PACK MANUFACTURER: TECHLIGHT MODEL #: MWPB6A-MT W/ BUTTON PHOTOCELL FINISH: ALUM. HOUSING, GASKETED, DARK BRONZE FINISH LAMP: (1) 150W LU150	
EMX		EXIT SIGN MANUFACTURER: LIGHTALARMS MODEL #: (W) UXQELC LAMP: LED'S FINISH: WHITE, STENCIL FACE RED LETTERS REMARKS: SINGLE OR TWIN FACE PER PLAN	
EMR		EXTERIOR EMERGENCY SIGN MANUFACTURER: DAYBRITE MODEL #: SUC132-D-120-CO LAMP: 6V, 120V REMARKS: REMOTE BATTERY PACK FOR EXTERIOR EGRESS LIGHT W/ TWO HEADS. SEALED BEAM LIGHTS, MAINTENANCE FREE BATTERY	

R.C.P. GENERAL NOTES

1. ALL FRONT OF HOUSE LIGHT FIXTURES TO BE DIMMABLE.
2. PREP & PAINT EXPOSED ACCESSORIES & ELECTRICAL CONDUIT.
3. ALL PENETRATIONS SHALL BE FIRE SAFED AND ACOUSTICALLY SEALED TO MAINTAIN BASE BUILDING RATINGS AS APPLICABLE.
4. G.C. SHALL PROVIDE BLOCKING, LIGHT GAUGE, OR MTL. FRAMING/UNISTRUT TO SUPPORT ALL CEILING FIXTURES INDEPENDENTLY OF ROOF DECK.
5. SPRINKLER SYSTEM, FIRE ALARM, & FIRE EXTINGUISHER TYPES & LOCATIONS ARE DESIGN/PERMIT/BUILD BY G.C. AT G.C. EXPENSE. G.C. TO VERIFY W/ LANDLORD DESIGNATED CONTRACTORS.
6. VERIFY HEIGHTS AND LOCATIONS OF ALL LIGHTING FIXTURES AND MECHANICAL REGISTERS IN FIELD W/ ARCHITECT AND OWNER. FINISH OF EXPOSED DUCTWORK AND REGISTERS SHALL BE INDICATED ON PLANS & FINISH SCHEDULE.
7. COORDINATE FIRE ALARM DEVICES TO AVOID CONFLICTS WITH FINISHES. SEE INTERIOR ELEVATIONS & DETAILS.
8. ALL LIGHT FIXTURES TO BE U.L. LISTED THROUGHOUT AND SHIELDED AT FOOD PREPARATION AREAS.
9. LIGHTING AT WORK AREAS AND BARS TO BE MIN. 50 FOOTCANDLES (INCLUDING SHIELDED LIGHTING). LIGHTING AT HAND SINK AREAS TO BE MIN. 50 FOOTCANDLES. LIGHTING AT WALK-IN FOOD COOLER AND WALK-IN BEER COOLER TO BE MIN. 20 FOOTCANDLES.
10. CONTRACTOR TO PROVIDE ELECTRICAL AS REQUIRED TO SIGNAGE (INTERIOR & EXTERIOR) -VERIFY LOCATION/HEIGHT AND POWER REQUIREMENTS IN FIELD WITH OWNER.
11. G.C. SHALL PROVIDE PRE-FABRICATED RECESSED METAL ACCESS PANELS IN GYP. BOARD CEILINGS AS REQUIRED FOR THE PROPER MAINTENANCE OF ELECTRICAL EQUIPMENT. G.C. TO COORDINATE SIZES AND LOCATIONS IN FIELD WITH ARCHITECT AND OWNER. PAINT PANELS TO MATCH ADJACENT CEILING FINISH.
12. DECORATIVE PENDANTS: VERIFY HEIGHT IN FIELD WITH ARCHITECT AND OWNER PRIOR TO INSTALLATION. G.C. SHALL NOTIFY ARCHITECT IMMEDIATELY OF ANY DISCREPANCIES NOTED.
13. G.C. TO PROVIDE 10% EXTRA TRACK HEADS.
14. FIXTURES WITH 'E' DESIGNATION SHALL HAVE EMERGENCY BALLAST.
15. ALL EXPOSED LOW-VOLTAGE WIRE (EXCEPT FIRE ALARM WIRING) SHALL BE 'BLACK' OR WRAPPED IN 'BLACK' PVC SHEATH (TYP.)
16. G.C. TO PROVIDE & INSTALL CAGE/SHIELD OVER EMERGENCY ELECTRICAL SHUTOFF SWITCH
17. PAINT ALL RECEPTACLE COVERS & EXPOSED CONDUIT / J-BOXES TO MATCH ADJACENT FINISHES. (TYPICAL, ALL LOCATIONS)
18. MOUNT ALL FIXTURES OVER MOVABLE TABLES ON UNISTRUT OR LIGHTING TRACK AS APPROPRIATE FOR FIXTURE WEIGHT.
19. PAINT ALL UNISTRUTS & THREADED ROD SUPPORTS 'BLACK' (TYPICAL, ALL LOCATIONS)
20. G.C. SHALL PROVIDE BLKG. / UNISTRUT ATTACHED TO ROOF JOISTS AS REQ'D TO MOUNT FIXTURES INDEPENDENT OF ROOF DECK.
21. ALL WIFI, SECURITY, & SPEAKER LOCATIONS TO BE VERIFIED IN FIELD W/ ARCHITECT PRIOR TO INSTALLATION.

VERIFY FIXTURE HEIGHTS IN FIELD W/ ARCHITECT & OWNER PRIOR TO STEM TRIMMING

iA ARCHITECTURE

SMOKEY BONES
UTICA, MI

CRUMB ENGINEERING
4609 Fairfield Street
P-504.455.4450
Metairie, La 70006
crumbengineering.com

COPYRIGHT
THESE DOCUMENTS ARE PROTECTED BY UNITED STATES COPYRIGHT LAW. THEY HAVE BEEN PREPARED SPECIFICALLY FOR THE PROJECT IDENTIFIED AND ARE NOT SUITABLE FOR USE ON ANY OTHER PROJECT OR AT ANY OTHER LOCATION WITHOUT THE EXPRESS WRITTEN APPROVAL AND PARTICIPATION OF ARCHITECTURE. REPRODUCTION OF THESE DOCUMENTS MUST BE AUTHORIZED BY THE ARCHITECT. ALL RIGHTS ARE RESERVED TO iARCHITECTURE.

STATE OF MICHIGAN
JASON T. CRUMB
License No. 6201070180
LICENSED PROFESSIONAL ENGINEER

REVISIONS	
NO.	DATE

PROJECT NO: IA 2119

SHEET E1.0

DATE 11/10/2021

GENERAL NOTES THIS SHEET:

1. REFER TO ARCHITECT'S FLOOR PLANS AND ARCHITECT'S ELEVATIONS FOR RECEPTACLE AND OUTLET LOCATIONS. PROVIDE ADDITIONAL RECEPTACLES AS REQUIRED.
2. PROVIDE DEDICATED NEUTRAL FOR EACH CIRCUIT. DO NOT SHARE NEUTRAL CONDUCTORS.
3. ALL CONDUIT SHALL BE 1/2" WITH 2-#12 AWG & 1-#12 GRD UNLESS NOTED OTHERWISE. FOR CONDUIT RUNS LONGER THAN 75', UPSIZE CONDUCTORS TO #10 AWG.
4. GROUNDING SHALL BE IN ACCORDANCE WITH NEC ART. 250.
5. PROVIDE POWER FOR ALL EQUIPMENT SHOWN ON MECHANICAL AND ARCHITECTURAL FLOOR PLANS. COORDINATE EXACT REQUIREMENTS WITH SUBMITTALS.
6. ALL WORK SHALL BE IN ACCORDANCE WITH THE NEC.
7. ALL TOILET ROOM, KITCHEN, EQUIPMENT ROOM AND RECEPTACLES WITHIN 6' OF A PLUMBING FIXTURE SHALL BE GFCI TYPE. EXTERIOR RECEPTACLES SHALL WEATHERPROOF GFCI.
8. PROVIDE RECEPTACLES NEAR AC EQUIPMENT FOR SERVICING AS REQUIRED BY THE NEC.
9. REFER TO KITCHEN EQUIPMENT PLAN GENERAL NOTES FOR ADDITIONAL INFORMATION.
10. NEW PANELS ARE SHOWN. CONTRACTOR MAY REUSE EXISTING PANELS AND GEAR SUBJECT TO THE FOLLOWING: OWNER APPROVAL, ENGINEER APPROVAL, IR SCAN OF EXISTING GEAR, CLEANING OF EXISTING GEAR.
11. ALL AV, IT, AND SPECIAL SYSTEMS PROVIDED BY OWNER. COORDINATE POWER REQUIREMENTS WITH OWNER.
12. VERIFY EXISTING EXTERIOR RECEPTACLE AND POWER CIRCUITS ON SITE. INTERCEPT CIRCUITS AND ROUTE TO NEW PANEL 'P'. VERIFY ON SITE.

SPECIFIC NOTES THIS SHEET:

(1) VERIFY LOCATION AND CIRCUITING OF EXISTING EXTERIOR RECEPTACLES AND POWER. CAPTURE EXTERIOR CIRCUITS AND RUN TO PANEL P.

(2) CAPTURE EXISTING COOLER/ FREEZER POWER AND RUN TO PANEL P. VERIFY EXACT REQUIREMENTS ON SITE. (1) 30A, 3 POLE CIRCUIT (3 # 10 AWG & 1 # 10 GRD) FOR CONDENSER AND (1) 20A CIRCUIT FOR LIGHTS, EVAPORATOR AND DOOR HEATER.

(3) 120V POWER TO HOOD CONTROL PANEL. REFER TO MECHANICAL HOOD PLANS.

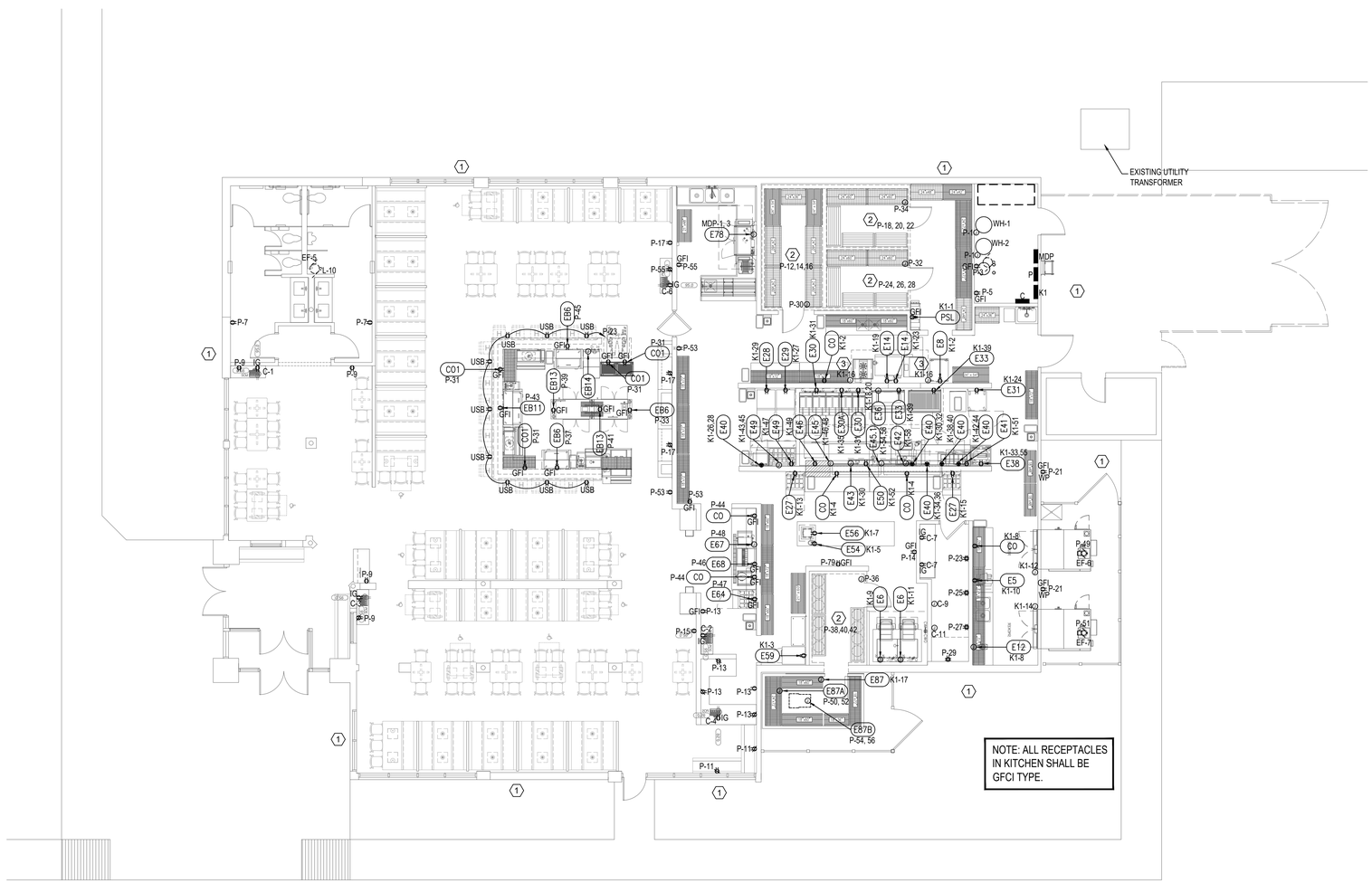

1 FLOOR PLAN - POWER
E2.0 1/8" = 1'-0"

KITCHEN EQUIPMENT ELECTRICAL ROUGH-IN NOTES:

CO 120V-1PH 16 AMP DUPLEX RECP. @ (+48" A.F.F.) FOR "CONVENIENCE OUTLET".

CO1 120V-1PH 16 AMP DUPLEX RECP. @ (+40" A.F.F.) UNDER BAR TOP FOR "CONVENIENCE OUTLET".

ESL 120V-1PH 16 AMP DUPLEX RECP. @ (+72" A.F.F.) FOR SODA SYSTEM.

E5 120V-1PH 1/3 H.P. 4.8 AMP RECP. @ (+48" A.F.F.) FOR SLICER (ITEM #5).

E6 (2 LOCATIONS) 120V-1PH SERVICE @ (+72" A.F.F.) E.C. TO EXTEND TO ICE MAKER (ITEM #6). (SEE KITCHHEN GENERAL NOTES 11,12,13,14 & 15).

E6A 208V-3PH 12.5 AMP SERVICE (VERIFY LOCATION) E.C. TO EXTEND TO ICE MAKER COMPRESSOR (ITEM #6A). (SEE GENERAL NOTES 11,12,13,14 & 15).

E8 120V-1PH 2.0KW 16.7 AMP RECP. @ (+18" A.F.F.) FOR HEATED PROOFING CABINET (ITEM #8).

E12 120V-1PH 1 H.P. 7 AMP RECP. @ (+48" A.F.F.) FOR FOOD PROCESSOR (ITEM #12).

E14 (2 LOCATIONS) 12OV-1PH 7.7 AMP RECP. @ (+18" & +36" A.F.F.) FOR DOUBLE DECK CONVECTION OVEN (ITEM #14).

E15 120V-1PH 12 AMP RECP. @ (+18" A.F.F) FOR RETHERMALIZER (ITEM #15).

E27 120V-1PH 1/5 H.P. 2.46 AMP RECP. @ (+18" A.F.F.) FOR REFRIGERATED PREP TABLE (ITEM #27).

E28 120V-1PH 1/4 H.P. 5.2 AMP RECP. @ (+18" A.F.F.) FOR REFRIGERATOR (ITEM #28).

E29 120V-1PH 1/3 H.P. 6.3 AMP RECP. @ (+18" A.F.F.) FOR FREEZER (ITEM #29).

E30 (2 LOCATIONS) 120V-1PH 1.7 AMP SERVICE @ (+18" A.F.F.) E.C. TO EXTEND TO FRYER BATTERY (ITEM #30). (SEE KITCHEN GENERAL NOTES 11,12,13,14 & 15).

E30A 120V-1PH 1/3 H.P. 7 AMP SERVICE @ (+18" A.F.F.) E.C. TO EXTEND TO FRYER FILTER (ITEM #30). (SEE KITCHEN GENERAL NOTES 11,12,13,14 & 15).

E31 120V-1PH 2.192 KW 18.3 AMP RECP. @ (+18" A.F.F.) FOR HEATED CABINET (ITEM #31).½"C, 2 # 10AWG & 1 # 10 GRD.

E33 (2 LOCATIONS) 120V-1PH 1/5 H.P. 2.5 AMP RECP. @ (+18" A.F.F.) FOR REFRIGERATED EQUIPMENT (ITEM #33).

E36 208V-1PH 3.6 KW SERVICE @ (+66" A.F.F.) E.C. TO EXTEND TO CHEESEMELTER (ITEM #36). (SEE KITCHEN GENERAL NOTES 11,12,13,14 & 15).

E38 208V-1PH 2.6 KW 12.5 AMP SERVICE @ (+48" A.F.F.) E.C. TO EXTEND TO CONVEYOR TOASTER (ITEM #38). (SEE KITCHEN GENERAL NOTES 11,12,13,14 & 15).

E40 (5 LOCATIONS) 208V-1PH 3 KW 20 AMP RECP. @ (+72" A.F.F.) FOR MICROWAVE OVEN (ITEM #40).

E41 120V-1PH 1/3 H.P. 6.1 AMP RECP. @ (+18" A.F.F.) FOR REFRIGERATED PREP TABLE (ITEM #41).

E42 120V-1PH 1.65 KW 13.75 AMP SERVICE @ (+24" A.F.F.) E.C. TO EXTEND TO HOT FOOD WELL (ITEM #42). (SEE KITCHEN GENERAL NOTES 11,12,13,14 & 15).

E43 (2 LOCATIONS) 120V-1PH .35 KW SERVICE @ (+72" A.F.F.) E.C. TO EXTEND TO OVERHEAD HEAT LAMP (ITEM #43). (SEE KITCHEN GENERAL NOTES 11,12,13,14 & 15).

E44 120V-1PH 1.692 KW 14.1 AMP RECP. @ (+18" A.F.F.) FOR WARMING CABINET (ITEM #44).

E45 120/208V-1PH 4.52 KW SERVICE @ (+72" A.F.F.) E.C. TO EXTEND TO OVERHEAD HEAT LAMP (ITEM #45). (SEE KITCHEN GENERAL NOTES 11,12,13,14 & 15).½"C, 3 # 10 AWG & 1 # 10 GRD.

E45.1 120/208V-1PH 3.81 KW SERVICE @ (+72" A.F.F.) E.C. TO EXTEND TO OVERHEAD HEAT LAMP (ITEM #45). (SEE KITCHEN GENERAL NOTES 11,12,13,14 & 15).½"C, 3 # 10 AWG & 1 # 10 GRD..

E46 120V-1PH .95 KW 8 AMP RECP. @ (+24" A.F.F.) FOR WARMING DRAWER (ITEM #46).

E49 208V-1PH 3.6 KW SERVICE @ (+66" A.F.F.) E.C. TO EXTEND TO CHEESEMELTER (ITEM #49). (SEE KITCHEN GENERAL NOTES 11,12,13,14 & 15).

E50 120V-1PH 1/3 H.P. 6.1 AMP RECP. @ (+18" A.F.F.) FOR REFRIGERATED PREP TABLE (ITEM #50).

E54 (STUB-UP) 120V-1PH .1 KW 1 AMP FLUSH MOUNTED RECP. FOR DIPPER WELL (ITEM #54).

E56 (STUB-UP) 120V-1PH 1/4 H.P. 3.5 AMP FLUSH MOUNTED RECP. FOR ICE CREAM DIPPING CABINET (ITEM #56).

E59 120V-1PH 1/4 H.P. 5.2 AMP RECP. @ (+18" A.F.F.) FOR REFRIGERATOR (ITEM #59).

E64 120V-1PH 1/5 H.P. 2.46 AMP RECP. @ (+18" A.F.F.) FOR REFRIGERATED PREP TABLE (ITEM #64).

E67 120V-1PH 1.67 KW 14 AMP SERVICE @ (+48" A.F.F.) E.C. TO EXTEND TO COFFEE MAKER (ITEM #67). (SEE KITCHEN GENERAL NOTES 11, 12, 13 , 14 & 15). ROUGH-IN SHOWN ARE FOR COORDINATION PURPOSES ONLY.

E68 120V-1PH 15 AMP RECP. @ (+48" A.F.F.) FOR SODA DISPENSER (ITEM #68). ROUGH-IN SHOWN ARE FOR COORDINATION PURPOSES ONLY.

E78 208V-1PH 2 HP 5 KW 43 AMP SERVICE @ (+60" A.F.F.) E.C. TO EXTEND TO DISHMACHINE (ITEM #78) TANK HEAT & MOTOR CONNECT. (SEE KITCHEN GENERAL NOTES 11,12,13,14 & 15). ROUGH-IN SHOWN ARE FOR COORDINATION PURPOSES ONLY. ¾"C, 2 # 6 AWG & 1 # 10 GRD.

E87 (DROP FROM ABOVE) 120V-1PH 16 AMP SERVICE TO (+106" A.F.F.) E.C. TO CONNECT TO JUNCTION BOX ON TOP OF WALK-IN COOLER (ITEM #87). E.C. TO EXTEND FROM JUNCTION BOX TO K.E.C. FURNISHED LIGHTS AS REQUIRED. LOCATION AND QUANTITY OF LIGHTS TO BE VERIFIED WITH MANUFACTURER'S SHOP DRAWINGS. E.C. TO WIRE PERIMETER DOOR HEATER (SEE GENERAL NOTES 20 & 21). E.C. TO PROVIDE AND EXTEND ALL FINAL ELECTRICAL HOOK-UPS AND DISCONNECTS. ALL WIRING AND CONDUIT SHALL BE INSTALLED ABOVE AND ON THE OUTSIDE OF THE UNIT CEILING. ALL PENETRATIONS THRU WALLS AND CEILING ARE TO BE EQUIPPED WITH "SEAL-OFFS" AND SEALED WITH SILICONE AT EACH JUNCTION BOX. K.E.C. SHALL PROVIDE E.C. WITH A SUFFICIENT NUMBER OF LIGHT FIXTURES TO PROVIDE A MINIMUM OF SEVENTY (70) FOOT CANDLES OF LIGHT INTENSITY MEASURED AT 30" A.F.F. AT ANY POINT IN THE COMPARTMENT. APPROXIMATELY ONE (1) 100 WATT LIGHT FIXTURE PER FIFTY (50) SQUARE FEET (NOT INCLUDING LIGHT FIXTURE ABOVE DOOR).

E87A (DROP FROM ABOVE) 208V-1PH 4.9 AMP SERVICE TO (+96" A.F.F.) WALK-IN COOLER COIL (ITEM #87A). E.C. TO RUN CONTROL WIRES FROM COOLER COIL (ITEM #87A) TO THERMOSTAT ON COOLER COMPRESSORS (ITEM #87B). E.C. TO FIELD VERIFY LOCATION. (SEE KITCHEN GENERAL NOTES 20 & 21). PROVIDE TOGGLE DS.

E87B 208V-1PH 1/2 H.P. 5.7 AMP SERVICE TO WALK-IN COOLER COMPRESSOR (ITEM #87B). E.C. TO EXTEND TO K.E.C. FURNISHED FUSED DISCONNECT SWITCH. E.C. TO FIELD VERIFY LOCATION. (SEE KITCHEN GENERAL NOTES 20 & 21). PROVIDE TOGGLE DS.

BAR EQUIPMENT ELECTRICAL ROUGH-IN NOTES:

EB6 (3 LOCATIONS) 120V-1PH 1/5 H.P. 5.4 AMP RECP. @ (+18" A.F.F.) FOR BOTTLE COOLER (ITEM #B6).

EB11 120V-1PH 1/3 H.P. 8 AMP RECP. @ (+18" A.F.F.) FOR BOTTLE COOLER (ITEM #B11).

EB13 (2 LOCATIONS) (STUB-UP) 120V-1PH 1/4 H.P. 3.7 AMP FLUSH MOUNTED RECP. FOR BACK BAR COOLER (ITEM #B13).

EB14 120V-1PH 1 H.P. 12 AMP RECP. @ (+24" A.,F.F.) FOR GLASS WASHER (ITEM #B14).

95.0 120V-1PH, 20A, ISOLATED GROUND RECEPTACLE FOR POS.

iA ARCHITECTURE

SMOKEY BONES
UTICA, MI

CRUMB ENGINEERING
4659 Fairfield Street Metairie, La 70006
P-504.455.4450 crumbengineering.com

COPYRIGHT
THESE DOCUMENTS ARE PROTECTED BY UNITED STATES COPYRIGHT LAW. THEY HAVE BEEN PREPARED SPECIFICALLY FOR THE PROJECT IDENTIFIED AND ARE NOT SUITABLE FOR USE ON ANY OTHER PROJECT OR AT ANY OTHER LOCATION WITHOUT THE EXPRESS WRITTEN APPROVAL AND PARTICIPATION OF iARCHITECTURE. REPRODUCTION OF THESE DOCUMENTS MUST BE AUTHORIZED BY THE ARCHITECT. ALL RIGHTS ARE RESERVED TO iARCHITECTURE.

STATE OF MICHIGAN
JASON T. CRUMB
License No. 6201070180
LICENSED PROFESSIONAL ENGINEER

REVISIONS	
NO.	DATE

PROJECT NO: IA 2119

SHEET E2.0

DATE 11/10/2021

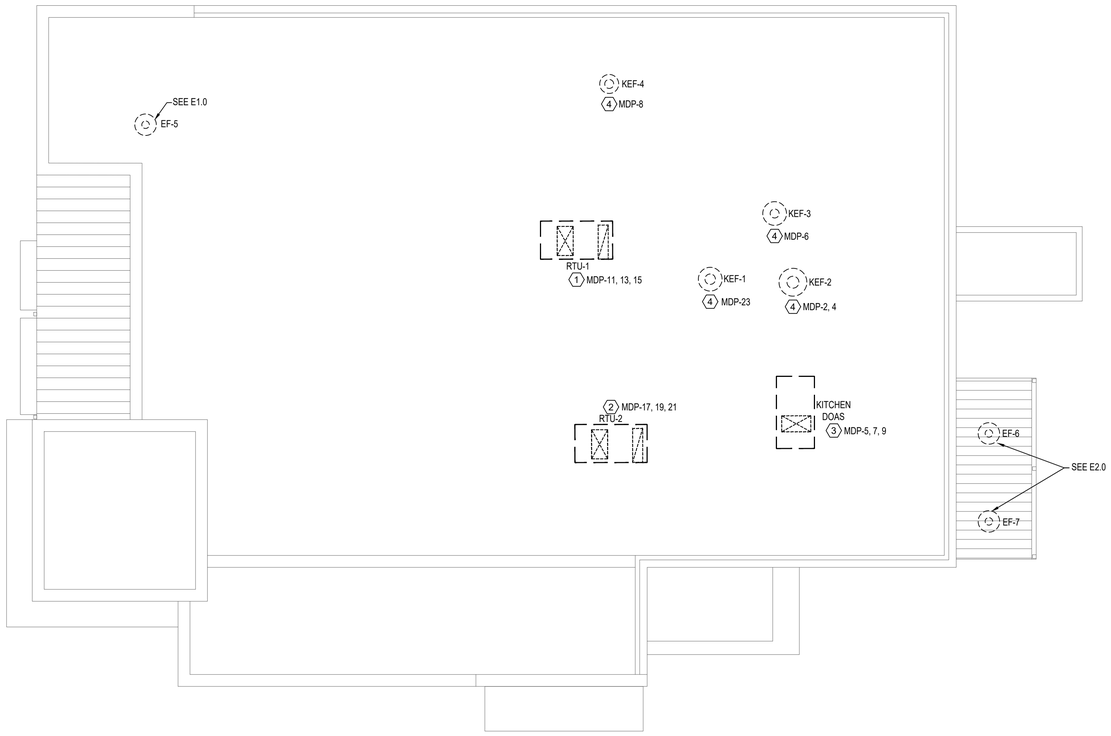

1 / E2.1 ROOF PLAN - ELECTRICAL

1/8" = 1'-0"

GENERAL NOTES THIS SHEET:

1. REFER TO ARCHITECT'S FLOOR PLANS AND ARCHITECT'S ELEVATIONS FOR RECEPTACLE AND OUTLET LOCATIONS. PROVIDE ADDITIONAL RECEPTACLES AS REQUIRED.
2. PROVIDE DEDICATED NEUTRAL FOR EACH CIRCUIT. DO NOT SHARE NEUTRAL CONDUCTORS.
3. ALL CONDUIT SHALL BE 1/2" WITH 2-#12 AWG & 1-#12 GRD UNLESS NOTED OTHERWISE. FOR CONDUIT RUNS LONGER THAN 75', UPSIZE CONDUCTORS TO #10 AWG.
4. GROUNDING SHALL BE IN ACCORDANCE WITH NEC ART. 250.
5. PROVIDE POWER FOR ALL EQUIPMENT SHOWN ON MECHANICAL AND ARCHITECTURAL FLOOR PLANS. COORDINATE EXACT REQUIREMENTS WITH SUBMITTALS.
6. ALL WORK SHALL BE IN ACCORDANCE WITH THE NEC.
7. ALL TOILET ROOM, KITCHEN, EQUIPMENT ROOM AND RECEPTACLES WITHIN 6' OF A PLUMBING FIXTURE SHALL BE GFCI TYPE. EXTERIOR RECEPTACLES SHALL WEATHERPROOF GFCI.
8. PROVIDE RECEPTACLES NEAR AC EQUIPMENT FOR SERVICING AS REQUIRED BY THE NEC.
9. SEE KITCHEN HOOD PLANS FOR WIRING DETAILS.
10. RTU'S HAVE CONVENIENCE OUTLETS.

SPECIFIC NOTES THIS SHEET:

1. RTU-1, 71.9 MCA, 80A MDP. 1" C, 3 #4 AWG & 1 #GRD.
2. RTU-2, 71.9 MCA, 80A MDP. 1" C, 3 #4 AWG & 1 #GRD.
3. DOAS, 81.5 MCA, 90 A MDP. 1¼" C, 3 #3 AWG & 1 #8 GRD.
4. KITCHEN EXHAUST FAN WITH DISCONNECT SWITCH.

iA ARCHITECTURE

SMOKEY BONES
UTICA, MI

CRUMB ENGINEERING
4609 Fairfield Street
P-504.455.4450
Metairie, La 70006
crumbengineering.com

COPYRIGHT
THESE DOCUMENTS ARE PROTECTED BY UNITED STATES COPYRIGHT LAW. THEY HAVE BEEN PREPARED SPECIFICALLY FOR THE PROJECT IDENTIFIED AND ARE NOT SUITABLE FOR USE ON ANY OTHER PROJECT OR AT ANY OTHER LOCATION WITHOUT THE EXPRESS WRITTEN APPROVAL AND PARTICIPATION OF iARCHITECTURE. REPRODUCTION OF THESE DOCUMENTS MUST BE AUTHORIZED BY THE ARCHITECT. ALL RIGHTS ARE RESERVED TO iARCHITECTURE.

STATE OF MICHIGAN
JASON T. CRUMB
License No. 6201070180
LICENSED PROFESSIONAL ENGINEER

REVISIONS	
NO.	DATE

PROJECT NO: IA 2119

SHEET E2.1

DATE 11/10/2021

ELECTRICAL LEGEND

SYMBOL	DESCRIPTION		SYMBOL	DESCRIPTION
$ a	SINGLE POLE SWITCH	LETTER DENOTES FIXTURE CONTROL		DUPLEX RECEPTACLE MTD. 18" ABOVE FLOOR
$ 3 a	THREE WAY SWITCH			DUPLEX RECEPT.MTD. ABOVE WORK SURFACE
$ F	COBINATION CEILING FAN/LIGHT SWITCH		WP	DUPLEX RECEPTACLE, WEATHERPROOF
$ D	DIMMER SWITCH			FLOOR OUTLET
	HOME RUN TO PANEL	CROSS LINES DENOTE NO. OF CONDUCTORS WHEN MORE THAN TWO		SPECIAL OUTLET
	CONCEALED WIRING		GFI	DUPLEX RECEPT. W/GROUND FAULT INTERRUPTER
	DISCONNECT SWITCH W/VISIBLE BLADES			QUADRAPLEX RECEPTACLE MTD. 18" ABOVE FLOOR
	ELECTRICAL HEATING ELEMENT		J	JUNCTION BOX
M	ELECTRIC METER		S	ELECT .MOTOR W/APPROVED DISC. SWITCH
	STARTER/ DISCONNECT			TELEPHONE OUTLET (WALL)
SW	DUPLEX OUTLET WITH TOP WIRED TO SWITCH			TELEPHONE OUTLET (FLOOR)
V	VIDEO OUTLET			DATA/CABLE OUTLET
$ HVL	HEAT VENT LIGHT COMBINATION SWITCH		USB	DUPLEX RECEPT. W/USB CHARGERS
SK	SOUND SYSTEM SPEAKER		RS	CLASSROOM LIGHTING CONTROL SYSTEM
ISP	INTERCOM SPEAKER		CK	CLOCK
TF	THEATRICAL LIGHT FIXTURE		F	LIGHTING FIXTURE

PANEL D — CABINET SURFACE MOUNTED — TYPE DIMMER
VOLTAGE 208Y/120V,3Ø,4W — FEEDER TOP — MAINS 125AMP MLO

CKT.	CH.	NOTE	DESCRIPTION	DIMMER	CKT. BREAKER	ØA	ØB	ØC
1	1		DINING TABLES - FRONT/LEFT	2.4 KW	20/1	1320		
2	2		DINING TABLES - TRACK FRONT	2.4 KW	20/1		900	
3	3		DINING TABLES - BAR	2.4 KW	20/1			700
4	4		DINING TABLES - TRACK	2.4 KW	20/1	800		
5	5		NOT USED	2.4 KW	20/1		1550	
6	6		NOT USED	2.4 KW	20/1			1500
7	7		EXTERIOR LIGHTS	2.4 KW	20/1	1200		
8	8		BAR - GLASS RACK	2.4 KW	20/1		320	
9	9		BAR - TOP	2.4 KW	20/1			720
10	10		BAR - WORK	2.4 KW	20/1	1600		
11	11		BOOTHS	2.4 KW	20/1		920	
12	12		NOT USED	2.4 KW	20/1			1000
13	12		NOT USED	2.4 KW	20/1	1000		
14	13		NOT USED	2.4 KW	20/1		1500	
15	14		LOBBY/ENTRY	2.4 KW	20/1			1200
16	15		ACCENT/ENTRY	2.4 KW	20/1	750		
17	16		NOT USED	2.4 KW	20/1		1000	
18	16		NOT USED	2.4 KW	20/1			1000
19	16		NOT USED	2.4 KW	20/1	1200		
20	17		BAR	2.4 KW	20/1		1600	
21	18		NOT USED	2.4 KW	20/1			800
22	19		NOT USED	2.4 KW	20/1	1320		
23	20		ENTRY	2.4 KW	20/1			
24	21		NOT USED	2.4 KW	20/1			
25	-	L	EMERGENCY/EXIT LIGHTS	-	20/1	1320		
INTEGRATED EQUIPMENT RATING: 22,000 AIC					KVA PHASE TOTAL:	9.2	7.8	6.9
					KVA PANELBOARD LOAD TOTAL:	23.9		

NOTES:
L= LOCK-ON DEVICE ON CIRCUIT BREAKER HANDLE.

1 / E3.0 ELECTRICAL SCHEDULES AND DETAILS
NO SCALE

ELECTRICAL SPECIFICATIONS

16100 - ELECTRICAL

1.1 General

A. Provide all labor, materials, equipment, fees, and electrical permits and all necessary items to install a complete electrical system.

B. It is the intent of this specification and of the plans to provide a complete system, regardless of whether each individual component is mentioned or not.

C. The work shall comply with the standards in the latest editions of the following listed codes and ordinances:

1. NFPA NO. 70 "National Electric Code" latest edition.
2. NECA "Standard of Installation."
3. Electric utility company service standards.
4. Telephone utility company service standards.
5. Cable TV utility company service standards.
6. Underwriter's Laboratory standards.
7. Other local codes, ordinances and laws applicable to the place of work.

1.2 Materials and workmanship

A. The contractor shall be responsible for the timely placement of all conduits, outlet boxes, cabinets, and other wiring devices in the walls, ceilings, etc, as the construction progresses.

B. The contractor shall furnish and install all materials for electrical installation. All materials shall have UL Labels. All work shall be installed in a neat and workmanlike fashion.

C. Conduit shall be emt for branch circuit wiring. Set screw or crimp fittings are not allowed. Metal clad cable (MC) may be used where Allowed by code. MC cable shall not be used where exposed areas. MC cable shall be used in wiring channels in bottom of wood members. Exposed conduits below 8'-0" AFF shall be rigid galvanized steel. PVC (SCH 40) shall be used below grade only. PVC conduit shall transition to rigid galvanized steel below grade, prior to stub-up. Flexible conduit shall be used to make final connection to electrical equipment where required, 60" max. Liquid tight shall be used for exterior applications, 60" max. Minimum conduit size shall be 3/4", all conductors shall be thhn, 600V copper building wire. Minimum wire size shall be #12 AWG unless noted otherwise. Conductors shall be color coded as follows:

Phase A - Back
Phase B - Red
Phase C - Blue

D. The contractor shall verify all dimensions and clearances prior to installation of equipment and raceways.

E. Outlet boxes shall be located as follows:
1. Wall switches - 4'-0" above finished floor.
2. Convenience outlets - 18" aff unless noted otherwise. Convenience outlets placed in the facing shall be placed so that they do not interfere with the trim.

F. Convenience receptacles shall be 20 amp, 125 volt NEMA 5-20R, unless noted otherwise. Cover plates shall match adjacent surface. cover plates in kitchen shall be stainless steel.

G. Wall switches shall be 20 amp, 120/277 V AC, single pole, unless noted otherwise. Cover plates shall match adjacent surface. cover plates in kitchen shall be stainless steel.

H. Wiring device plates shall be plastic, painted to match wall, in dining rooms, stainless steel in kitchen and bar areas and ivory plastic in office, liquor storage room and toilets. Provide blank cover plates for all unused outlets (data, telephone, etc.).

I. Panelboards are scheduled on the drawings. General Electric, Square D, or Cutler-Hammer. All terminals shall be rated for 75 degrees C minimum. All panelboards shall have solid copper busses. Short circuit rating shall be as listed on panel schedules. Panelboards shall be furnished in a single UL Listed electrical enclosure (unitized switchboard). Contractor shall verify all dimensions and proper clearances are maintained prior to installing the main electrical enclosure. Unit shall be purchased from:
Carolina Products, Inc.
1132 Pro Am Drive
Charlotte, NC 28211
Phone: 1-800-736-4455

J. Grounding the electrical system shall be in accordance with Article 250 of the National Eectrical Code and with local requirements. code and with local requirements. Ground service to building steel, driven ground rod, and cold water pipe.

K. Make final connections to kitchen and bar equipment set in place by others. Make electrical connections to all items shown as part of the general contract which require electricity. This shall include all electrical wiring for the walk-in coolers and freezers, including lights and control wiring. Wire and install equipment shipped loose.

L. The contractor shall furnish and install equipment disconnects as indicated or required. Fuses in all disconnect switches and other fusible device shall be dual element current limiting type. Furnish with 3 spare fuses of each type and size used on the job. Switches and fuses shall be size to suit the actual equipment being served.

M. Connect motor starters, relays, switches, and related items which are provided under the mechanical work.

N. Install a new underground electrical service from the utility company's exterior power facilities. Contractor shall coordinate with utility company prior to work and make all modifications as required. The new service shall include the underground conduit and conductors shown on the plans and provisions for metering and associated hardware. Coordinate the location and installation of the utility company's transformer. Contractor shall review the unitized switch board shop drawings prior to rough-in of service to verify proper stub-up locations for feeders. Contractor shall coordinate with utility company for primary conduit installation (if required). The contractor shall be responsible for all fees associated with the new service.

O. Provide raceways and boxes for cash register point of sale (pos), data cables fprovided, installed and connected by owner, including connectors and coverplates.This system does require conduit except in wall and under floors. Final connection of cables to equipment is by owner.

P. Install lighting control and dimmer system as noted on plans, including all interface requirements. System provided by owner.

Q. Ductwork takes precedence over electrical conduit. Coordinate conduit runs to allow ductwork to be installed as drawn. Light fixtures take procedence over ductwork.

R. All interior lights shall be controlled from wall switches and dimmer system. lights shall not be switched from panels alone.

S. Install an underground telephone conduit for the new service. Provide and install a pvc conduit from the point of origin of the service to the mechanical room. Install a pull chord for use by others. Size conduit per telephone company requirements.

T. All exterior lighting circuits shall be routed to terminals in vented switchboard. Circuits routed internall via contactors. Contactors shall be controlled by lighting control system as indicated on plans.

U. Install an underground cable TV conduit for the new service. Provide and install a pvc conduit from the point of origin of the service to the mechanical room. Install a pull chord for use by others. Size conduit per television company requirements.

V. All enclosures shall be of the NEMA type which is suitable for the application.

W. All work shall have proper labeling. All circuits shall be labeled at panels and boxes as indicated. All panels and disconnects are to be permanently marked with name or equipment served utilizing engraved nameplates, laminated phenolic black with white letters, 3/8" min. All panels are to be approved with type written panel schedules.

X. All breakers shall be HACR rated.

Y. Provide and install conduit and junction boxes for exterior signs (disconnects per nec-600-6) and interior lighting as indicated on the Drawings.

Z. Fire alarm and security system shall be installed by adt, owner's system and contractor.

Contractor shall install all boxes and conduit as required by ADT. All boxes for fire alarm system shall be installed At the proper height to meet ADA requirements (80" AFF for strobes and 48" for pull stations).

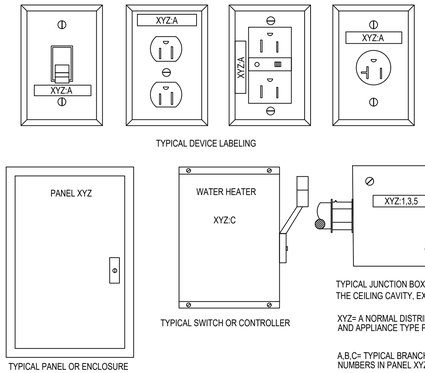

TYPICAL DEVICE LABELING

TYPICAL PANEL OR ENCLOSURE

TYPICAL SWITCH OR CONTROLLER

TYPICAL JUNCTION BOX OR PULL BOX, IN THE CEILING CAVITY, EXPOSED, ETC.

XYZ= A NORMAL DISTRIBUTION OR LIGHTING AND APPLIANCE TYPE PANELBOARD.

A,B,C= TYPICAL BRANCH CIRCUIT OR POLE NUMBERS IN PANEL XYZ.

DEVICE AND EQUIPMENT LABELING DETAIL
NO SCALE

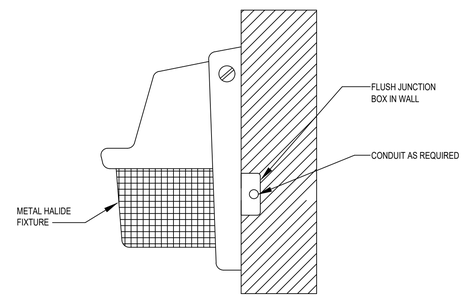

1 / E3.0 EXTERIOR LIGHTING FIXTURE MOUNTING DETAIL
N.T.S.

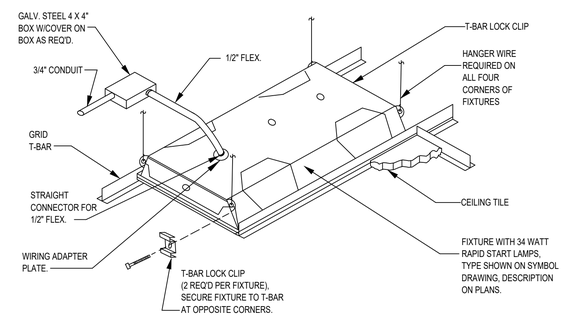

2 / E3.0 TYPICAL RECESSED FLUORESCENT FIXTURE MOUNTING
N.T.S.

iARCHITECTURE

SMOKEY BONES
UTICA, MI

CRUMB ENGINEERING
4609 Fairfield Street
P-504.455.4450
Metairie, La 70006
crumbengineering.com

COPYRIGHT
THESE DOCUMENTS ARE PROTECTED BY UNITED STATES COPYRIGHT LAW. THEY HAVE BEEN PREPARED SPECIFICALLY FOR THE PROJECT IDENTIFIED AND ARE NOT SUITABLE FOR USE ON ANY OTHER PROJECT OR AT ANY OTHER LOCATION WITHOUT THE EXPRESS WRITTEN APPROVAL AND PARTICIPATION OF IARCHITECTURE. REPRODUCTION OF THESE DOCUMENTS MUST BE AUTHORIZED BY THE ARCHITECT. ALL RIGHTS ARE RESERVED TO IARCHITECTURE.

STATE OF MICHIGAN
JASON T. CRUMB
License No. 6201070180
LICENSED PROFESSIONAL ENGINEER

REVISIONS	
NO.	DATE

PROJECT NO: IA 2119
SHEET E3.0
DATE 11/10/2021

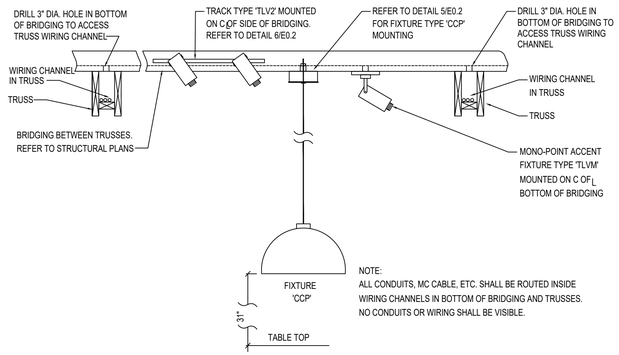

NOTE:
ALL CONDUITS, MC CABLE, ETC. SHALL BE ROUTED INSIDE WIRING CHANNELS IN BOTTOM OF BRIDGING AND TRUSSES. NO CONDUITS OR WIRING SHALL BE VISIBLE.

1 / E3.1 LIGHT FIXTURE SUPPORT DETAILS @ BRIDGING
N.T.S.

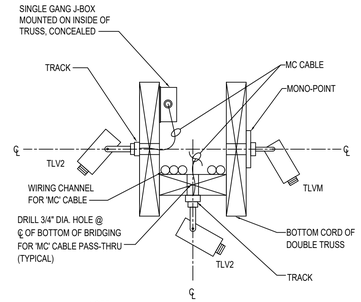

NOTE:
ALL CONDUITS, MC CABLE, ETC. SHALL BE ROUTED INSIDE WIRING CHANNELS IN BOTTOM OF BRIDGING AND TRUSSES. NO CONDUITS OR WIRING SHALL BE VISIBLE.

2 / E3.1 TYPICAL TRACK MOUNTING DETAIL @ TRUSS
N.T.S.

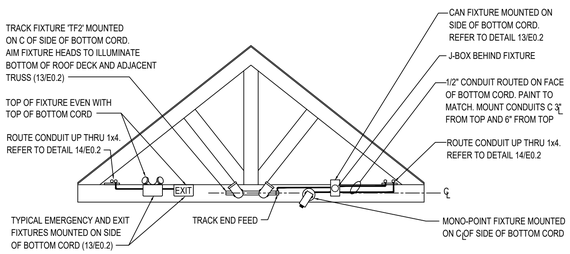

NOTES:
1. ALL FIXTURES SHOWN ON SAME SIDE OF TRUSS FOR CLARITY. REFER TO PLAN FOR ACTUAL LOCATION.
2. CONDUITS ROUTED ON FACE OF SINGLE TRUSS ARE THE ONLY CONDUITS THAT ARE ALLOWED TO BE EXPOSED TO VIEW.
3. CONTRACTOR MAY COMBINE CIRCUITS INTO CONDUITS AS REQUIRED FOR SHORT RUNS ACROSS FACE OF BOTTOM CORD. EMERGENCY CIRCUITS SHALL ALWAYS BE IN A SEPERATE CONDUIT. TWO CONDUITS MAXIMUM MAY BE INSTALLED ON FACE OF CORD. CIRCUITS SHALL BE SEPERATED ONCE ABOVE CONCEALMENT BOARDS.

3 / E3.1 ELEVATION OF SINGLE TRUSS, TYPICAL FIXTURE MOUNTING
N.T.S.

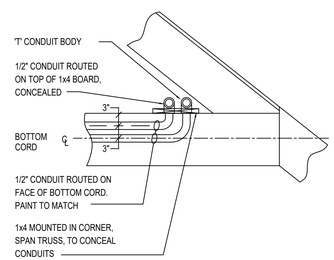

4 / E3.1 CONDUIT CONCEALMENT DETAIL
N.T.S.

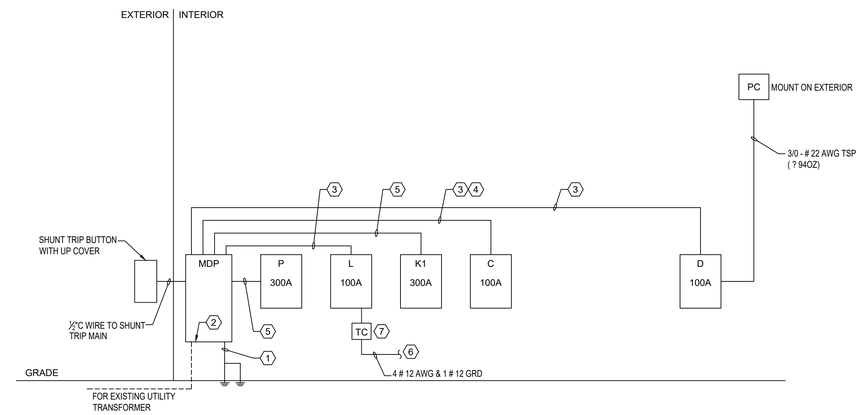

FEEDER DIAGRAM NOTES:

1. #⅙ GRD TO 2 x ¾"Øx 10' COPPER BONDED DRIVEN GROUND RODS.
2. CONNECT EXISTING FEEDERS TO MAIN BREAKER.
3. 1 ½"c, 4 # 3 AWG & 1 # 8 GRD.
4. PROVIDE # 8 ISOLATED GRD TO MDR.
5. 3"C, 4 350 KCMIL & 1 # 4 GRD.
6. CAPTURE EXISTING EXTERIOR LIGHT CIRCUITS.
7. 2-POLE DIGITAL TIME CLOCK.

1 / E3.1 ELECTRICAL SCHEDULES AND DETAILS
NO SCALE

iA ARCHITECTURE

SMOKEY BONES
UTICA, MI

CRUMB ENGINEERING
4609 Fairfield Street
P-504.455.4450
Metairie, La 70006
crumbengineering.com

COPYRIGHT
THESE DOCUMENTS ARE PROTECTED BY UNITED STATES COPYRIGHT LAW. THEY HAVE BEEN PREPARED SPECIFICALLY FOR THE PROJECT IDENTIFIED AND ARE NOT SUITABLE FOR USE ON ANY OTHER PROJECT OR AT ANY OTHER LOCATION WITHOUT THE EXPRESS WRITTEN APPROVAL AND PARTICIPATION OF iARCHITECTURE. REPRODUCTION OF THESE DOCUMENTS MUST BE AUTHORIZED BY THE ARCHITECT. ALL RIGHTS ARE RESERVED TO iARCHITECTURE.

STATE OF MICHIGAN
JASON T. CRUMB
License No. 6201070180
LICENSED PROFESSIONAL ENGINEER

REVISIONS	
NO.	DATE

PROJECT NO: IA 2119

SHEET E3.1

DATE 11/10/2021

PROJECT NAME: Smokey Bones Utica
DATE: 11/10/2021
CE JOB #:
PANEL: C
LOCATION 178
MOUNTING: SURFACE MOUNT
VOLTAGE: 120/208
PHASE: 3, 4 WIRE
BUS AMPS: 100
MAIN OVERCURRENT DEVICE TYPE: CB
MAIN OVERCURRENT AMPS: 100

E= HVAC EQUIP. LOAD COOLING
L= LIGHTING LOAD
R= RECEPTACLE LOAD
W= WATER HEATER
K= KITCHEN EQ.
M= MISC EQ.
S= SPARES
H = HVAC EQUIP LOAD HEATING

REMARKS: WITH GROUND BUS, 10000 AIC, TUSS, ISOLATED GROUND BUS

CKT NO.	CIRCUIT NAME	BREAKER AMP	BREAKER POLE	LOAD VA	USE	PH	USE	LOAD VA	BREAKER AMP	BREAKER POLE	CIRCUIT NAME	CKT NO.
1	POS	20	1	500	R	A	R	500	20	1	POS	2
3	POS	20	1	500	R	B	R	500	20	1	POS	4
5	POS	20	1	500	R	C	R	500	20	1	POS	6
7	OFFICE	20	1	400	R	A	S	200	20	1	SPARE	8
9	OFFICE	20	1	400	R	B	S	200	20	1	SPARE	10
11	OFFICE	20	1	400	R	C	S	200	20	1	SPARE	12
13	SPARE	20	1	200	S	A	S	200	20	1	SPARE	14
15	SPARE	20	1	200	S	B	S	200	20	1	SPARE	16
17	SPARE	20	1	200	S	C	S	200	20	1	SPARE	18
19	SPARE	20	1	200	S	A	S	200	20	1	SPARE	20
21	SPARE	20	1	200	S	B	S	200	20	1	SPARE	22
23	SPARE	20	1	200	S	C	S	200	20	1	SPARE	24
25	SPARE	20	1	200	S	A	S	200	20	1	SPARE	26
27	SPARE	20	1	200	S	B	S	200	20	1	SPARE	28
29	SPARE	20	1	200	S	C	S	200	20	1	SPARE	30
31	SPARE	20	1	200	S	A	S	200	20	1	SPARE	32
33	SPARE	30	1	200	S	B	S	200	20	1	SPARE	34
35	SPARE		1	200	S	C	S	200	20	1	SPARE	36
37	SPARE	20	1	200	S	A	S	200	20	1	SPARE	38
39	SPARE	20	1	200	S	B	S	200	20	1	SPARE	40
41	SPARE	20	1	200	S	C	S	200	20	1	SPARE	42

	PHASE A	PHASE B	PHASE C	OT CONN	DEMAND	DEM .LOAD
HVAC COOLING LOAD (VA)	0	0	0	0	1	0
LIGHTING LOAD (VA)	0	0	0	0	1	0
RECEPTACLE LOAD (VA)	1400	1400	1400	4200	1	4200
WATER HEATER LOAD (VA)	0	0	0	0	1	0
KITCHEN EQ. LOAD (VA)	0	0	0	0	1	0
MISC EQ. LOAD (VA)	0	0	0	0	1	0
SPARES (VA)	2200	2200	2200	6600	1	6600
HVAC HEATING LOAD (VA)	0	0	0	0	1	0
TOTAL LOAD (VA)	3600	3600	3600	10800		10800

TOTAL CONNECTED LOAD KW 10.8 TOTAL DEMAND LOAD KW 10.8

PHASE A CONNECTED AMPS 17.31
PHASE B CONNECTED AMPS 17.31
PHASE C CONNECTED AMPS 17.31

PHASE A DEMAND AMPS 17
PHASE B DEMAND AMPS 17.3
PHASE C DEMAND AMPS 17.3

PROJECT NAME: Smokey Bones Utica
DATE: 11/10/2021
CE JOB #:
PANEL: K1
LOCATION ELEC
MOUNTING: SURFACE MOUNT
VOLTAGE: 120/208
PHASE: 3, 4 WIRE
BUS AMPS: 400
MAIN OVERCURRENT DEVICE TYPE: CB
MAIN OVERCURRENT AMPS: 300

E= HVAC EQUIP. LOAD COOLING
L= LIGHTING LOAD
R= RECEPTACLE LOAD
W= WATER HEATER
K= KITCHEN EQ.
M= MISC EQ.
S= SPARES
H = HVAC EQUIP LOAD HEATING

REMARKS: WITH GROUND BUS, 10000 AIC

CKT NO.	CIRCUIT NAME	BREAKER AMP	BREAKER POLE	LOAD VA	USE	PH	USE	LOAD VA	BREAKER AMP	BREAKER POLE	CIRCUIT NAME	CKT NO.
1	SODA	20	1	1000	K	A	K	400	20	1	RECEPTACLE	2
3	REFRIGERATOR	20	1	600	K	B	K	400	20	1	RECEPTACLE	4
5	DIPPER WELL	20	1	150	K	C	K	200	20	1	SPARE	6
7	DIPPER CABINET	20	1	500	K	A	K	400	20	1	RECEPTACLE	8
9	ICE MAKER	20	1	1500	K	B	K	600	20	1	SLICER	10
11	ICE MAKER	20	1	1500	K	C	K	500	20	1	SMOKER	12
13	PREP TABLE	20	1	400	K	A	K	500	20	1	SMOKER	14
15	PREP TABLE	20	1	400	K	B	K	1000	20	1	HOOD POWER/ LIGHTS	16
17	COOLER LIGHTS/POWER	20	1	1600	K	C	K	1800	30	2	CHEESEMELTER*	18
19	CONVECTION OVEN*	20	1	900	K	A	K	1800				20
21	SPACE FOR SHUNT TRIP			0	S	B	S	0			SPACE FOR SHUNT TRIP	22
23	CONVECTION OVEN*	20	1	900	K	C	K	2200	20	1	HEATED CABINET	24
25	SPACE FOR SHUNT TRIP			0	S	A	K	1500	20	2	MICROWAVE	26
27	FREEEZER	20	1	750	K	B	K	1500				28
29	REFRIGERATOR	20	1	650	K	C	K	1500	20	2	MICROWAVE	30
31	FRYER*	20	1	500	K	A	K	1500				32
33	SPACE FOR SHUNT TRIP			0	S	B	K	1500	20	2	MICROWAVE	34
35	FRYER FILTER*	20	1	800	K	C	K	1500				36
37	SPACE FOR SHUNT TRIP			0	S	A	K	1500	20	2	MICROWAVE	38
39	REFRIGERATED CUP*	20	1	600	K	B	K	1500				40
41	SPACE FOR SHUNT TRIP			0	S	C	K	1500	20	2	MICROWAVE	42
43	CHEESEMELTER*	30	2	1800	K	A	K	1500				44
45				1800	K	B	K	2250	30	2	HEAT LAMP	46
47	PREP TABLE	20	1	700	K	C	K	2250				48
49	WARMING DRAWER	20	1	1000	K	A	K	350	20	1	HEAT LAMP	50
51	PREP TABLE	20	1	720	K	B	K	720	20	1	PREP TABLE	52
53	TOASTER	20	2	1300	K	C	K	1600	30	2	HEAT LAMP	54
55				1300	K	A	K	1600				56
57	SPARE	20	1	200	S	B	K	1700	20	1	HOT WELL	58
59	SPARE	20	1	200	S	C	S	200	20	1	SPARE	60
61	SPARE	20	1	200	S	A	S	200	20	1	SPARE	62
63	SPARE	20	1	200	S	B	S	200	20	1	SPARE	64
65	SPARE	20	1	200	S	C	S	200	20	1	SPARE	66
67	SPARE	20	1	200	S	A	S	200	20	1	SPARE	68
69	SPARE	20	1	200	S	B	S	200	20	1	SPARE	70
71	SPARE	20	1	200	S	C	S	200	20	1	SPARE	72
73	SPARE	20	1	200	S	A	S	200	20	1	SPARE	74
75	SPARE	20	1	200	S	B	S	200	20	1	SPARE	76
77	SPARE	20	1	200	S	C	S	200	20	1	SPARE	78
79	SPARE	20	1	200	S	A	S	200	20	1	SPARE	80
81	SPARE	20	1	200	S	B	S	200	20	1	SPARE	82
83	SPARE	20	1	200	S	C	S	200	20	1	SPARE	84

*SHUNT TRIP BREAKER, WIRE TO HOOD CONTROLS

	PHASE A	PHASE B	PHASE C	TOTAL
TOTAL LOAD (VA)	20050	19,340	23050	62440

TOTAL CONNECTED LOAD KW 62.44

PHASE A CONNECTED AMPS 96.39
PHASE B CONNECTED AMPS 92.98
PHASE C CONNECTED AMPS 110.82

PROJECT NAME: Smokey Bones Utica
DATE: 11/10/2021
CE JOB #:
PANEL: P
LOCATION ELEC
MOUNTING: SURFACE MOUNT
VOLTAGE: 120/208
PHASE: 3, 4 WIRE
BUS AMPS: 400
MAIN OVERCURRENT DEVICE TYPE: CB
MAIN OVERCURRENT AMPS: 300

E= HVAC EQUIP. LOAD COOLING
L= LIGHTING LOAD
R= RECEPTACLE LOAD
W= WATER HEATER
K= KITCHEN EQ.
M= MISC EQ.
S= SPARES
H = HVAC EQUIP LOAD HEATING

REMARKS: WITH GROUND BUS, 10000 AIC

CKT NO.	CIRCUIT NAME	BREAKER AMP	BREAKER POLE	LOAD VA	USE	PH	USE	LOAD VA	BREAKER AMP	BREAKER POLE	CIRCUIT NAME	CKT NO.
1	WATER HEATER	20	1	500	R	A	R	500	20	1	EXISTING CIRCUIT*	2
3	CIRC PUMP	20	1	150	R	B	R	500	20	1	EXISTING CIRCUIT*	4
5	WATER SOFT	20	1	250	R	C	R	500	20	1	EXISTING CIRCUIT*	6
7	TOILET ROOM	20	1	180	R	A	R	500	20	1	EXISTING CIRCUIT*	8
9	RECEPTACLES	20	1	800	R	B	R	500	20	1	EXISTING CIRCUIT*	10
11	RECEPTACLES	20	1	400	R	C	K	2000	30	3	EXISTING COOLER/	12
13	RECEPTACLES	20	1	800	R	A	K	2000			FREEZER	14
15	RECEPTACLES	20	1	400	R	B	K	2000				16
17	RECEPTACLES	20	1	600	R	C	K	2000	30	3	EXISTING COOLER/	18
19	RECEPTACLES	20	1	400	R	A	K	2000			FREEZER	20
21	RECEPTACLES	20	1	400	R	B	K	2000				22
23	BAR RECETPACLES	20	1	1800	R	C	K	2000	30	3	EXISTING COOLER/	24
25	OFFICE	20	1	400	R	A	K	2000			FREEZER	26
27	OFFICE	20	1	400	R	B	K	2000				28
29	OFFICE	20	1	400	R	C	K	800	20	1	EXT. BTLE COOLER/FRE	30
31	BAR RECETPACLES	20	1	800	R	A	K	800	20	1	EXT. BTLE COOLER/FRE	32
33	BOTTLE COOLER	20	1	600	K	B	K	800	20	1	EXT. BTLE COOLER/FRE	34
35	BOTTLE COOLER	20	1	600	K	C	K	200	20	1	EXT. BTLE COOLER/FRE	36
37	BOTTLE COOLER	20	1	600	K	A	K	2000	30	3	EXISTING COOLER/	38
39	BAR COOLER	20	1	450	K	B	K	2000			FREEZER	40
41	BAR COOLER	20	1	450	K	C	K	2000				42
43	BOTTLE COOLER	20	1	1000	K	A	K	400	20	1	RECEPTACLES	44
45	GLASS WASHER	20	1	1300	K	B	K	1670	20	1	COFFEE	46
47	PREP TABLE	20	1	400	K	C	K	500	20	1	SODA	48
49	EF-6*	20	1	400	M	A	K	300	20	2	COOLER	50
51	EF-7	20	1	400	M	B	K	300				52
53	RECEPTACLES	20	1	600	R	C	K	400	20	2	COOLER	54
55	RECEPTACLES	20	1	600	R	A	K	400				56
57	SPARE	20	1	200	S	B	S	200	20	1	SPARE	58
59	SPARE	20	1	200	S	C	S	200	20	1	SPARE	60
61	SPARE	20	1	200	S	A	S	200	20	1	SPARE	62
63	SPARE	20	1	200	S	B	S	200	20	1	SPARE	64
65	SPARE	20	1	200	S	C	S	200	20	1	SPARE	66
67	SPARE	20	1	200	S	A	S	200	20	1	SPARE	68
69	SPARE	20	1	200	S	B	S	200	20	1	SPARE	70
71	SPARE	20	1	200	S	C	S	200	20	1	SPARE	72
73	SPARE	20	1	200	S	A	S	200	20	1	SPARE	74
75	SPARE	20	1	200	S	B	S	200	20	1	SPARE	76
77	SPARE	20	1	200	S	C	S	200	20	1	SPARE	78
79	SPARE	20	1	200	S	A	S	200	20	1	SPARE	80
81	SPARE	20	1	200	S	B	S	200	20	1	SPARE	82
83	SPARE	20	1	200	S	C	S	200	20	1	SPARE	84

* VERIFY EXISTING CIRCUITS TO BE CAPTURED ON SITE

	PHASE A	PHASE B	PHASE C	TOTAL
TOTAL LOAD (VA)	18180	18,670	18300	55150

TOTAL CONNECTED LOAD KW 55.15

PHASE A CONNECTED AMPS 87.40
PHASE B CONNECTED AMPS 89.76
PHASE C CONNECTED AMPS 87.98

PROJECT NAME: Smokey Bones Utica
DATE: 11/10/2021
CE JOB #:
PANEL: L
LOCATION 178
MOUNTING: SURFACE MOUNT
VOLTAGE: 120/208
PHASE: 3, 4 WIRE
BUS AMPS: 200
MAIN OVERCURRENT DEVICE TYPE: CB
MAIN OVERCURRENT AMPS: 100

E= HVAC EQUIP. LOAD COOLING
L= LIGHTING LOAD
R= RECEPTACLE LOAD
W= WATER HEATER
K= KITCHEN EQ.
M= MISC EQ.
S= SPARES
H = HVAC EQUIP LOAD HEATING

REMARKS: WITH GROUND BUS, 10000 AIC

CKT NO.	CIRCUIT NAME	BREAKER AMP	BREAKER POLE	LOAD VA	USE	PH	USE	LOAD VA	BREAKER AMP	BREAKER POLE	CIRCUIT NAME	CKT NO.
1	KITCHEN LTS	20	1	1200	L	A	L	800	20	1	COOLER LTS	2
3	KITCHEN LTS	20	1	500	L	B	L	800	20	1	COOLER LTS	4
5	KITCHEN LTS	20	1	800	L	C	L	400	20	1	TOILET LTS	6
7	LIGHT BAND	20	1	1800	L	A	E	200	20	1	EF-5	8
9	EXT LTS	20	1	300	L	B	M	1,600	20	1	SIGN	10
11	SPARE	20	1	200	S	C	M	1,600	20	1	SIGN	12
13	EXT LTS	20	1	1500	L	A	S	200	20	1	SPARE	14
15	SPARE	20	1	200	S	B	S	200	20	1	SPARE	16
17	SPARE	20	1	200	S	C	S	200	20	1	SPARE	18
19	SPARE	20	1	200	S	A	S	200	20	1	SPARE	20
21	SPARE	20	1	200	S	B	S	200	20	1	SPARE	22
23	SPARE	20	1	200	S	C	S	200	20	1	SPARE	24
25	SPARE	20	1	200	S	A	S	200	20	1	SPARE	26
27	SPARE	20	1	200	S	B	S	200	20	1	SPARE	28
29	SPARE	20	1	200	S	C	S	200	20	1	SPARE	30
31	SPARE	20	1	200	S	A	S	200	20	1	SPARE	32
33	SPARE	20	1	200	S	B	S	200	20	1	SPARE	34
35	SPARE	20	1	200	S	C	S	200	20	1	SPARE	36
37	SPARE	20	1	200	S	A	S	200	20	1	SPARE	38
39	SPARE	20	1	200	S	B	S	200	20	1	SPARE	40
41	SPARE	20	1	200	S	C	S	200	20	1	SPARE	42

	PHASE A	PHASE B	PHASE C	OT CONN	DEMAND	DEM .LOAD
HVAC COOLING LOAD (VA)	200	0	0	200	1	200
LIGHTING LOAD (VA)	5300	1600	1200	8100	1	8100
RECEPTACLE LOAD (VA)	0	0	0	0	1	0
WATER HEATER LOAD (VA)	0	0	0	0	1	0
KITCHEN EQ. LOAD (VA)	0	0	0	0	1	0
MISC EQ. LOAD (VA)	0	1600	1600	3200	1	3200
SPARES (VA)	1800	2000	2200	6000	1	6000
HVAC HEATING LOAD (VA)	0	0	0	0	1	0
TOTAL LOAD (VA)	7300	5200	5000	17500		17500

TOTAL CONNECTED LOAD KW 17.5 TOTAL DEMAND LOAD KW 17.5

PHASE A CONNECTED AMPS 35.10
PHASE B CONNECTED AMPS 25.00
PHASE C CONNECTED AMPS 24.04

PHASE A DEMAND AMPS 35
PHASE B DEMAND AMPS 25.0
PHASE C DEMAND AMPS 24.0

PROJECT NAME: Smokey Bones Utica
DATE: 11/10/2021
PANEL: MDP
LOCATION ELEC
MOUNTING: SURFACE
VOLTAGE: 120/208
PHASE: 3, 4W
BUS AMPS: 1200
MAIN OVERCURRENT DEVICE TYPE: CB
MAIN OVERCURRENT AMPS: 1200

E= HVAC EQUIP. LOAD COOLING
L= LIGHTING LOAD
R= RECEPTACLE LOAD
W= WATER HEATER
K= KITCHEN EQ.
M= MISC EQ.
S= SPARES
H = HVAC EQUIP LOAD HEATING

REMARKS: TVSS, GROUND BUS, 22000 AIC, SHUNT TRIP MAIN

CKT NO.	CIRCUIT NAME	BREAKER AMP	BREAKER POLE	LOAD VA	USE	PH	USE	LOAD VA	BREAKER AMP	BREAKER POLE	CIRCUIT NAME	CKT NO.
1	DISHMACHINE	60	2	3250	K	A	E	750	20	2	KEF-2	2
3				3250	K	B	E	750				4
5	KITCHEN DOAS	90	3	8000	E	C	E	1000	20	1	KEF-3	6
7				8000	E	A	E	500	20	1	KEF-4	8
9				8000	E	B	M	16670	300	3	PANEL P	10
11	RTU-1	80	3	8350	E	C	M	15900				12
13				8350	E	A	M	16580				14
15				8350	E	B	M	17540	300	3	PANEL K1	16
17	RTU-2	80	3	8350	E	C	M	20650				18
19				8350	E	A	M	18450				20
21				8350	E	B	M	3600	100	3	PANEL C	22
23	KEF-1	20	1	1000	M	C	M	3600				24
25	SPARE	20	1	200	S	A	M	3600				26
27	SPARE	20	1	200	S	B	M	9000	100	3	PANEL D	28
29	SPARE	20	1	200	S	C	M	8000				30
31	SPARE	20	1	200	S	A	M	7000				32
33	SPARE	20	1	200	S	B	M	5200	100	3	PANEL L	34
35	SPARE	20	1	200	S	C	M	5000				36
37	SPARE	20	1	200	S	A	M	7300				38
39	SPARE	20	1	200	S	B	S	200	20	1	SPARE	40
41	SPARE	20	1	200	S	C	S	200	20	1	SPARE	42
43	SPARE	20	1	200	S	A	S	200	20	1	SPARE	44
45	SPARE	20	1	200	S	B	S	200	20	1	SPARE	46
47	SPARE	20	1	200	S	C	S	200	20	1	SPARE	48
49	SPARE	20	1	200	S	A	S	200	20	1	SPARE	50
51	SPARE	20	1	200	S	B	S	200	20	1	SPARE	52
53	SPARE	20	1	200	S	C	S	200	20	1	SPARE	54
55	SPARE	20	1	200	S	A	S	200	20	1	SPARE	56
57	SPARE	20	1	200	S	B	S	200	20	1	SPARE	58
59	SPARE	20	1	200	S	C	S	200	20	1	SPARE	60

	PHASE A	PHASE B	PHASE C	TOTAL	DEMAND
TOTAL LOAD (VA)	83930	82710	81850	248490	198792

TOTAL CONNECTED LOAD KW 248.49 TOTAL DEMAND LOAD KW 198.8

PHASE A CONNECTED AMPS 403.51
PHASE B CONNECTED AMPS 397.64
PHASE C CONNECTED AMPS 393.51

PANEL FUSING SIZE 863.20

1 / E3.2 ELECTRICAL SCHEDULES AND DETAILS
NO SCALE

iARCHITECTURE

SMOKEY BONES
UTICA, MI

CRUMB ENGINEERING
4609 Fairfield Street
P-504.455.4450
Metairie, La 70006
crumbengineering.com

COPYRIGHT
THESE DOCUMENTS ARE PROTECTED BY UNITED STATES COPYRIGHT LAW. THEY HAVE BEEN PREPARED SPECIFICALLY FOR THE PROJECT IDENTIFIED AND ARE NOT SUITABLE FOR USE ON ANY OTHER PROJECT OR AT ANY OTHER LOCATION WITHOUT THE EXPRESS WRITTEN APPROVAL AND PARTICIPATION OF iARCHITECTURE. REPRODUCTION OF THESE DOCUMENTS MUST BE AUTHORIZED BY THE ARCHITECT. ALL RIGHTS ARE RESERVED TO iARCHITECTURE.

STATE OF MICHIGAN
JASON T. CRUMB
License No. 6201070140
LICENSED PROFESSIONAL ENGINEER

REVISIONS	
NO.	DATE

PROJECT NO: IA 2119
SHEET E3.2
DATE 11/10/2021

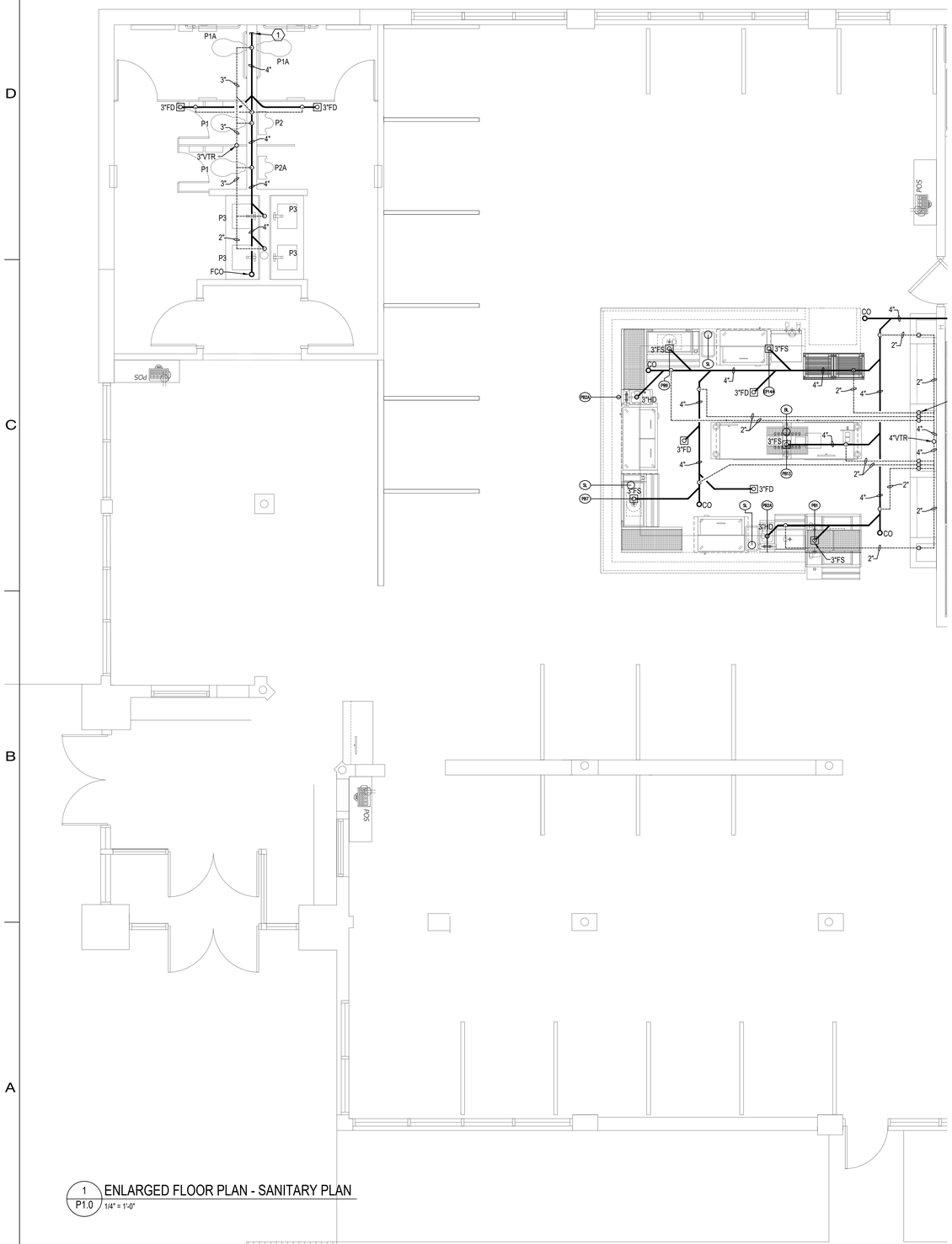

1 P1.0 ENLARGED FLOOR PLAN - SANITARY PLAN

1/4" = 1'-0"

K1 P.C. TO INSTALL K.E.C. FURNISHED MECHANICAL GAS SHUT-OFF VALVE IN MAIN GAS SUPPLY LINE IN ACCESSIBLE LOCATION PRIOR TO BRANCHING GAS SERVICE TO EQUIPMENT. P.C. TO VERIFY GAS LINE SIZE PER VALVE.

KITCHEN EQUIPMENT PLUMBING ROUGH-IN NOTES:

G14 3/4" NPT 100,000 BTU SERVICE @ (24" A.F.F.) P.C. TO EXTEND TO DOUBLE DECK CONVECTION OVEN MANIFOLD (ITEM #14). THRU F.F.E.C. FURNISHED QUICK DISCONNECT.

G15 3/4" NPT 50,000 BTU SERVICE @ (24" A.F.F.) P.C. TO EXTEND TO RETHERMALIZER (ITEM #15). THRU F.F.E.C. FURNISHED QUICK DISCONNECT.

G16 3/4" NPT 52,000 BTU SERVICE @ (24" A.F.F.) P.C. TO EXTEND TO HOT PLATE (ITEM #16). THRU F.F.E.C. FURNISHED QUICK DISCONNECT.

G30 1-1/4" NPT MANIFOLD 525,000 BTU SERVICE @ (24" A.F.F.) P.C. TO EXTEND TO FRYERbBATTERY (ITEM #30).

G34 3/4" NPT 136,000 BTU SERVICE @ (24" A.F.F.) P.C. TO EXTEND TO CHARBROILER (ITEM #34). THRU F.F.E.C. FURNISHED QUICK DISCONNECT.

G35 3/4" NPT 100,000 BTU SERVICE @ (24" A.F.F.) P.C. TO EXTEND TO GRIDDLE (ITEM #36). THRU F.F.E.C. FURNISHED QUICK DISCONNECT.

PSL 1/2" COLD WATER @ (+60" A.F.F.) FOR SODA SYSTEM. ROUGH-IN SHOWN ARE FOR COORDINATION PURPOSES ONLY. THIS ITEM IS TO BE PROVIDED AND INSTALLED BY OTHERS. VERIFY LOCATION WITH PROVIDER.

PSLA FLOOR DRAIN FOR SODA SYSTEM. ROUGH-IN SHOWN ARE FOR COORDINATION PURPOSES ONLY. THIS ITEM IS TO BE PROVIDED AND INSTALLED BY OTHERS. VERIFY LOCATION WITH PROVIDER.

P1 (4 LOCATIONS) 1/2" 120 DEG. HOT AND COLD WATER @ (+18" A.F.F.). P.C. TO EXTEND TO FAUCET MOUNTED ON HAND SINK (ITEM #1).

P1A (4 LOCATIONS) 1-1/2" WASTE @ (+15" A.F.F.) P.C. TO EXTEND DRAIN FROM HAND SINK (ITEM #1) TO THIS POINT.

P6 1/2" COLD WATER @ (+66" A.F.F.) P.C. TO EXTEND TO ICE MACHINE (ITEM #6). THRU F.F.E.C. FURNISHED WATER FILTER.

P6A 12" X 12" X 8" DEEP FLOOR SINK WITH HALF GRATE. P.C. TO EXTEND DRAIN LINE FROM ICE BIN (ITEM #6) TO THIS POINT. (SEE GENERAL NOTE 4).

P7 1/2" HOT AND COLD WATER @ (+18" A.F.F.) P.C. TO EXTEND TO FAUCET MOUNTED ON PREP TABLE (ITEM #7).

P7A 12" X 12" X 8" DEEP FLOOR SINK WITH HALF GRATE. P.C. TO MANIFOLD DRAIN LINES FROM 2 COMPARTMENT SINK (ITEM #7) AND EXTEND TO THIS POINT. (SEE GENERAL NOTE 4).

P11 1/2" HOT AND COLD WATER @ (+36" A.F.F.) P.C. TO EXTEND TO WALL MOUNTED FAUCET FOR MOP SINK (ITEM #11)

P11A (STUB-UP) 3" WASTE TRAPPED BELOW FLOOR. P.C. TO EXTEND TO DRAIN IN MOP SINK.

P15 1/2" COLD WATER @ (+12" A.F.F.) P.C. TO EXTEND TO RETHERMALIZER (ITEM #15).

P15A 12" X 12" X 8" DEEP FLOOR SINK WITH HALF GRATE. P.C. TO EXTEND DRAIN LINE FROM RETHERMALIZER (ITEM #15) TO THIS POINT. (SEE GENERAL NOTE 4).

P42 12" X 12" X 8" DEEP FLOOR SINK WITH HALF GRATE. P.C. TO EXTEND DRAIN LINE FROM HOT FOOD WELL (ITEM #42) TO THIS POINT. (SEE GENERAL NOTE 4).

P56 12" X 12" X 8" DEEP FLOOR SINK WITH HALF GRATE. P.C. TO EXTEND DRAIN LINE FROM ICE CREAM DIPPING CABINET (ITEM #56) TO THIS POINT. (SEE GENERAL NOTE 4).

P68 1/2" COLD WATER @ (+48" A.F.F.) P.C. TO EXTEND TO SODA DISPENSER (ITEM #68). ROUGH-IN SHOWN ARE FOR COORDINATION PURPOSES THIS ITEM IS TO BE PROVIDED AND INSTALL BY OTHERS. VERIFY LOCATION WITH PROVIDER.

P68A 12" X 12" X 8" DEEP FLOOR SINK WITH HALF GRATE. P.C. TO EXTEND DRAIN LINE FROM SODA DISPENSER (ITEM #68) TO THIS POINT. ROUGH-IN SHOWN ARE FOR COORDINATION PURPOSES THIS ITEM IS TO BE PROVIDED AND INSTALL BY OTHERS. VERIFY LOCATION WITH PROVIDER. P.C. TO EXTEND DRAIN LINE FROM TROUGH DRAIN BEVERAGE TABLE (ITEM #65) TO THIS POINT. (SEE GENERAL NOTE 4).

P67 1/2" COLD WATER @ (+48" A.F.F.) P.C. TO EXTEND TO COFFEE BREWER (ITEM #67). ROUGH-IN SHOWN ARE FOR COORDINATION PURPOSES THIS ITEM IS TO BE PROVIDED AND INSTALL BY OTHERS. VERIFY LOCATION WITH PROVIDER.

P73 1/2" HOT AND COLD WATER @ (+12" A.F.F.). P.C. TO EXTEND TO FAUCET MOUNTED ON PREP TABLE SINK (ITEM #73).

P73A 12" X 12" X 8" DEEP FLOOR SINK WITH HALF GRATE. P.C. TO MANIFOLD (2) DRAIN LINES FROM PREP TABLE SINK (ITEM #73) AND EXTEND TO THIS POINT. (SEE GENERAL NOTE 4).

P76 1/2" HOT AND COLD WATER @ (+18" A.F.F.) P.C. TO EXTEND TO FAUCET MOUNTED ON SOILED DISHTABLE (ITEM #76).

P76A 12" X 12" X 8" DEEP FLOOR SINK WITH HALF GRATE. P.C. TO EXTEND DRAIN LINE FROM SOILED DISHTABLE (ITEM #76). TO THIS POINT. (SEE GENERAL NOTE 4).

P78 1/2" HOT WATER @ (+50" A.F.F.) P.C. TO EXTEND TO DISHWASHER (ITEM #20).

P78A 12" X 12" X 8" DEEP FLOOR SINK WITH HALF GRATE. P.C. TO EXTEND DRAIN LINE FROM SOILED DISHTABLE (ITEM #76). P.C. TO EXTEND DRAIN FROM DISHMACHINE (ITEM #78) TO THIS POINT. (SEE GENERAL NOTE 4).

P80 12" X 12" X 8" DEEP FLOOR SINK WITH HALF GRATE. P.C. TO MANIFOLD (3) DRAIN LINES FROM POT AND PAN SINK (ITEM #81) AND EXTEND TO THIS POINT. (SEE GENERAL NOTE 4).

P81 1/2" HOT AND COLD WATER @ (+12" A.F.F.). P.C. TO EXTEND TO FAUCET MOUNTED ON POT AND PAN SINK (ITEM #81).

P82 (STUB-UP) 1/2" COLD WATER. P.C. TO EXTEND TO SOAK SINK FAUCET (ITEM #82) MOUNTED ON SOILED DISHTABLE (ITEM #76).

BAR EQUIPMENT PLUMBING ROUGH-IN NOTES:

SL (2 LOCATIONS) (STUB-UP) 6" PVC CHASE FOR SODA LINES. ROUGH-IN SHOWN ARE FOR COORDINATION PURPOSES THIS ITEM IS TO BE PROVIDED AND INSTALL BY OTHERS. VERIFY LOCATION WITH PROVIDER.

BL (STUB-UP) 6" PVC CHASE FOR BEER LINES. ROUGH-IN SHOWN ARE FOR COORDINATION PURPOSES THIS ITEM IS TO BE PROVIDED AND INSTALL BY OTHERS. VERIFY LOCATION WITH PROVIDER.

PB1 12" X 12" X 8" DEEP FLOOR SINK WITH HALF GRATE. P.C. TO EXTEND DRAIN LINE FROM PASS-THRU COCKTAIL STATION (ITEM #B1) AND UNDERBAR ICE BIN (ITEM #B4) TO THIS POINT. (SEE GENERAL NOTE 4).

PB2 (2 LOCATIONS) 1/2" 120 DEG. HOT AND COLD WATER @ (+12" A.F.F.) P.C. TO EXTEND TO UNDERBAR HAND SINK (ITEM #2)

PB2A (2 LOCATIONS) 1-1/2" WASTE @ (+10" A.F.F.) P.C. TO EXTEND TO UNDERBAR HAND SINK (ITEM #2)

PB7 12" X 12" X 8" DEEP FLOOR SINK WITH HALF GRATE. P.C. TO EXTEND DRAIN LINE FROM UNDERBAR ICE BIN (ITEM #B7) AND DRAIN BOARD (ITEM #B12) TO THIS POINT. (SEE GENERAL NOTE 4).

PB9 12" X 12" X 8" DEEP FLOOR SINK WITH HALF GRATE. P.C. TO EXTEND DRAIN LINE FROM UNDERBAR ICE BIN (ITEM #B9) AND DRAIN BOARD (ITEM #B10) TO THIS POINT. (SEE GENERAL NOTE 4).

PB13 12" X 12" X 8" DEEP FLOOR SINK WITH HALF GRATE. P.C. TO EXTEND DRAIN LINE FROM BEER TROUGH MOUNTED ON BACK BAR COOLER (ITEM #B13) TO THIS POINT. (SEE GENERAL NOTE 4).

PB14 1/2" HOT WATER @ (+15" A.F.F.) P.C. TO EXTEND TO GLASS WASHER (ITEM #14). ROUGH-IN SHOWN ARE FOR COORDINATION PURPOSES ONLY. THIS ITEM IS TO BE PROVIDED AND INSTALLED BY OTHERS. VERIFY LOCATION WITH PROVIDER.

PB14A 12" X 12" X 8" DEEP FLOOR SINK WITH HALF GRATE. P.C. TO EXTEND DRAIN LINE FROM GLASS WASHER (ITEM #B14) TO THIS POINT. (SEE GENERAL NOTE 4). ROUGH-IN SHOWN ARE FOR COORDINATION PURPOSES ONLY. THIS ITEM IS TO BE PROVIDED AND INSTALLED BY OTHERS. VERIFY LOCATION WITH PROVIDER.

GENERAL NOTES THIS SHEET:

1. ALL SEWER AND STORM DRAIN PIPING SHALL BE RUN BELOW SLAB UNLESS NOTED OTHERWISE. HANG FROM SLAB PER DETAIL.
2. VENT PIPING SHALL BE RUN ABOVE CEILING OR TIGHT TO STRUCTURE.
3. PROVIDE TRAP PRIMERS ON ALL FLOOR DRAINS.
4. INSULATE HORIZONTAL RUN OF ALL WASTE PIPING RECEIVING A/C CONDENSATE.
5. INSULATE ROOF DRAINS AND HORIZONTAL STORM DRAIN PIPING RUNS ABOVE GRADE.
6. ALL COLD WATER, HOT WATER AND HOT WATER RE-CIRCULATING PIPING SHALL BE RUN ABOVE CEILING OR TIGHT TO STRUCTURE. STORM DRAIN PIPING ABOVE GRADE SHALL BE RUN ABOVE CEILING OR TIGHT TO STRUCTURE.
7. ALL WATER PIPING SHALL BE 3/4" UNLESS NOTED OTHERWISE.
8. PROVIDE AIR CHAMBERS ON ALL DOMESTIC WATER BRANCH PIPING SERVING FIXTURES.
9. PROVIDE ISOLATION VALVES IN THE HOT AND COLD WATER PIPING TO ALL FIXTURE GROUPS.
10. MINIMUM VENT THRU ROOF SHALL BE 3". (1)
11. ALL FIXTURES SHALL BE INSTALLED LEVEL AND TRUE, CENTER FIXTURES WHERE APPLICABLE, FOR INSTANCE WATER CLOSETS IN NON-ADA STALLS.
12. ALL ADA FIXTURES SHALL BE INSTALLED PER ADA GUIDELINES.
13. FLOOR DRAINS IN TOILET ROOMS SHALL BE COORDINATED AND LOCATED PER ARCHITECTURAL FLOOR PLANS.
14. FLOOR DRAINS USED FOR AIR UNITS SHALL BE LOCATED AS CLOSE TO EDGE OF UNIT AS POSSIBLE. COORDINATE LOCATION WITH SUBMITTED UNIT DIMENSIONAL DATA.
15. PLUMBING SHALL CONFORM TO THE 2015 MICHIGAN PLUMBING CODE. (1)
16. ALL LAVATORIES, HANDWASH SINKS AND KITCHEN SINKS SHALL BE PROVIDED WITH A THERMOSTATIC MIXING VALVE LOCATED ABOVE THE CEILING WITH THE HW PIPED TO THE LAVATORY FIXTURE GROUP HW INLET(S). FOR 1 TO 6 LAVATORIES, USE LEONARD MODEL LF-370 OR LAWLER MODEL 570 WITH 3/4" FITTINGS. 3-COMPARTMENT SINK AND DISHWASHER DO NOT NEED MIXING VALVES.
17. PLUMBING DRAWINGS ARE SCHEMATIC IN NATURE. COORDINATE PIPE ROUTING WITH STRUCTURE AND UNDERGROUND SUPPORTS. ADJUST LOCATION AS REQUIRED.
18. REFER TO KITCHEN EQUIPMENT PLAN FOR KITCHEN EQUIPMENT GENERAL NOTES.
19. SEE SHEETS P3.0 - P3.2 FOR PLUMBING DETAILS.

SPECIFIC NOTES THIS SHEET:

(1) CONNECT TO EXISTING SEWER. VERIFY EXACT LOCATION ON SITE.

iA ARCHITECTURE

SMOKEY BONES
UTICA, MI

CRUMB ENGINEERING
4609 Fairfield Street
P-504.455.4450
Metairie, La 70006
crumbengineering.com

COPYRIGHT
THESE DOCUMENTS ARE PROTECTED BY UNITED STATES COPYRIGHT LAW. THEY HAVE BEEN PREPARED SPECIFICALLY FOR THE PROJECT IDENTIFIED AND ARE NOT SUITABLE FOR USE ON ANY OTHER PROJECT OR AT ANY OTHER LOCATION WITHOUT THE EXPRESS WRITTEN APPROVAL AND PARTICIPATION OF iARCHITECTURE. REPRODUCTION OF THESE DOCUMENTS MUST BE AUTHORIZED BY THE ARCHITECT. ALL RIGHTS ARE RESERVED TO iARCHITECTURE.

STATE OF MICHIGAN
JASON T. CRUMB
License No. 6201070180
LICENSED PROFESSIONAL ENGINEER

REVISIONS	
NO.	DATE
1	1-4-22

PROJECT NO: IA 2119

SHEET P1.0

DATE 11/10/2021

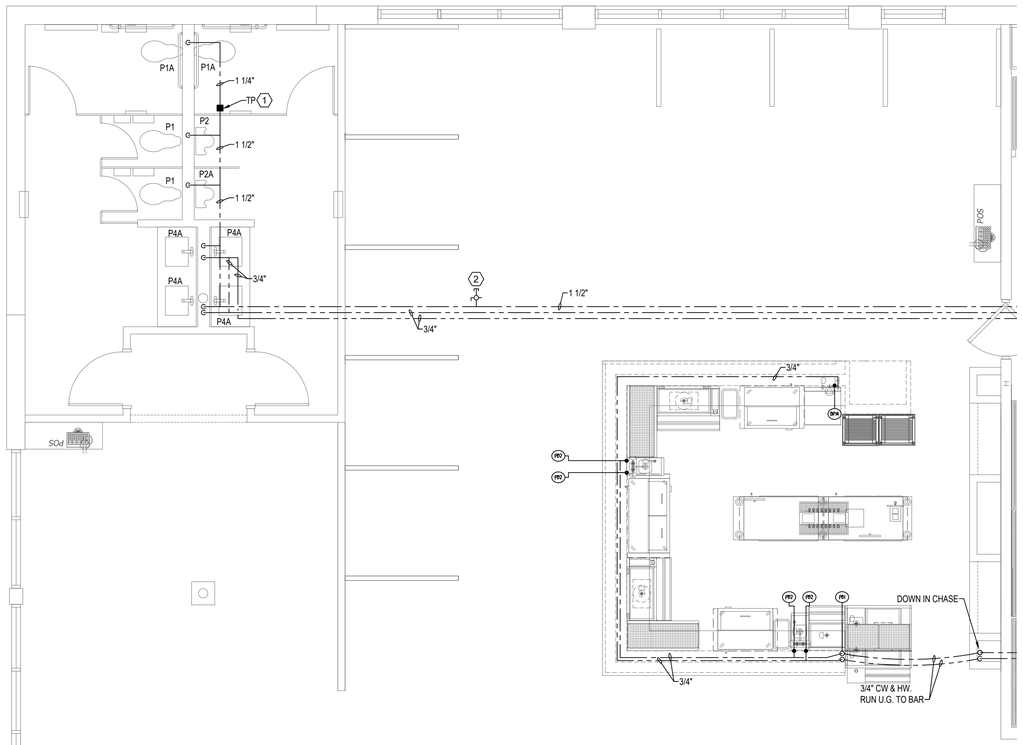

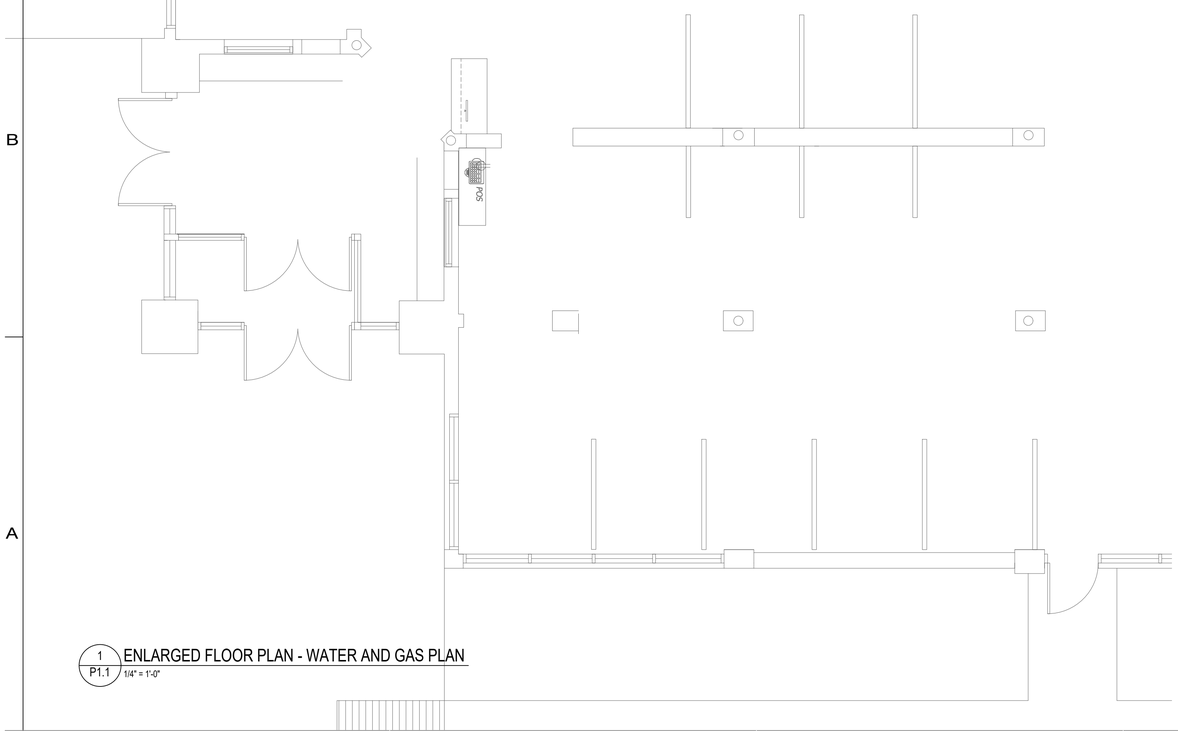

1 / P1.1 ENLARGED FLOOR PLAN - WATER AND GAS PLAN

1/4" = 1'-0"

K1 P.C. TO INSTALL K.E.C. FURNISHED MECHANICAL GAS SHUT-OFF VALVE IN MAIN GAS SUPPLY LINE IN ACCESSIBLE LOCATION PRIOR TO BRANCHING GAS SERVICE TO EQUIPMENT. P.C. TO VERIFY GAS LINE SIZE PER VALVE.

KITCHEN EQUIPMENT PLUMBING ROUGH-IN NOTES:

G14 3/4" NPT 100,000 BTU SERVICE @ (24" A.F.F.) P.C. TO EXTEND TO DOUBLE DECK CONVECTION OVEN MANIFOLD (ITEM #14). THRU F.F.E.C. FURNISHED QUICK DISCONNECT.

G15 3/4" NPT 50,000 BTU SERVICE @ (24" A.F.F.) P.C. TO EXTEND TO RETHERMALIZER (ITEM #15). THRU F.F.E.C. FURNISHED QUICK DISCONNECT.

G16 3/4" NPT 52,000 BTU SERVICE @ (24" A.F.F.) P.C. TO EXTEND TO HOT PLATE (ITEM #16). THRU F.F.E.C. FURNISHED QUICK DISCONNECT.

G30 1-1/4" NPT MANIFOLD 525,000 BTU SERVICE @ (24" A.F.F.) P.C. TO EXTEND TO FRYERrBATTERY (ITEM #30).

G34 3/4" NPT 136,000 BTU SERVICE @ (24" A.F.F.) P.C. TO EXTEND TO CHARBROILER (ITEM #34). THRU F.F.E.C. FURNISHED QUICK DISCONNECT.

G35 3/4" NPT 100,000 BTU SERVICE @ (24" A.F.F.) P.C. TO EXTEND TO GRIDDLE (ITEM #36). THRU F.F.E.C. FURNISHED QUICK DISCONNECT.

PSL 1/2" COLD WATER @ (+60" A.F.F.) FOR SODA SYSTEM. ROUGH-IN SHOWN ARE FOR COORDINATION PURPOSES ONLY. THIS ITEM IS TO BE PROVIDED AND INSTALLED BY OTHERS. VERIFY LOCATION WITH PROVIDER.

PSLA FLOOR DRAIN FOR SODA SYSTEM. ROUGH-IN SHOWN ARE FOR COORDINATION PURPOSES ONLY. THIS ITEM IS TO BE PROVIDED AND INSTALLED BY OTHERS. VERIFY LOCATION WITH PROVIDER.

P1 (4 LOCATIONS) 1/2" 120 DEG. HOT AND COLD WATER @ (+18" A.F.F.). P.C. TO EXTEND TO FAUCET MOUNTED ON HAND SINK (ITEM #1).

P1A (4 LOCATIONS) 1-1/2" WASTE @ (+15" A.F.F.) P.C. TO EXTEND DRAIN FROM HAND SINK (ITEM #1) TO THIS POINT.

P6 1/2" COLD WATER @ (+66" A.F.F.) P.C. TO EXTEND TO ICE MACHINE (ITEM #6). THRU F.F.E.C. FURNISHED WATER FILTER.

P6A 12" X 12" X 8" DEEP FLOOR SINK WITH HALF GRATE. P.C. TO EXTEND DRAIN LINE FROM ICE BIN (ITEM #6) TO THIS POINT. (SEE GENERAL NOTE 4).

P7 1/2" HOT AND COLD WATER @ (+18" A.F.F.) P.C. TO EXTEND TO FAUCET MOUNTED ON PREP TABLE (ITEM #7).

P7A 12" X 12" X 8" DEEP FLOOR SINK WITH HALF GRATE. P.C. TO MANIFOLD DRAIN LINES FROM 2 COMPARTMENT SINK (ITEM #7) AND EXTEND TO THIS POINT. (SEE GENERAL NOTE 4).

P11 1/2" HOT AND COLD WATER @ (+36" A.F.F.) P.C. TO EXTEND TO WALL MOUNTED FAUCET FOR MOP SINK (ITEM #11)

P11A (STUB-UP) 3" WASTE TRAPPED BELOW FLOOR. P.C. TO EXTEND TO DRAIN IN MOP SINK.

P15 1/2" COLD WATER @ (+12" A.F.F.) P.C. TO EXTEND TO RETHERMALIZER (ITEM #15).

P15A 12" X 12" X 8" DEEP FLOOR SINK WITH HALF GRATE. P.C. TO EXTEND DRAIN LINE FROM RETHERMALIZER (ITEM #15) TO THIS POINT. (SEE GENERAL NOTE 4).

P42 12" X 12" X 8" DEEP FLOOR SINK WITH HALF GRATE. P.C. TO EXTEND DRAIN LINE FROM HOT FOOD WELL (ITEM #42) TO THIS POINT. (SEE GENERAL NOTE 4).

P56 12" X 12" X 8" DEEP FLOOR SINK WITH HALF GRATE. P.C. TO EXTEND DRAIN LINE FROM ICE CREAM DIPPING CABINET (ITEM #56) TO THIS POINT. (SEE GENERAL NOTE 4).

P68 1/2" COLD WATER @ (+48" A.F.F.) P.C. TO EXTEND TO SODA DISPENSER (ITEM #68). ROUGH-IN SHOWN ARE FOR COORDINATION PURPOSES THIS ITEM IS TO BE PROVIDED AND INSTALL BY OTHERS. VERIFY LOCATION WITH PROVIDER.

P68A 12" X 12" X 8" DEEP FLOOR SINK WITH HALF GRATE. P.C. TO EXTEND DRAIN LINE FROM SODA DISPENSER (ITEM #68) TO THIS POINT. ROUGH-IN SHOWN ARE FOR COORDINATION PURPOSES THIS ITEM IS TO BE PROVIDED AND INSTALL BY OTHERS. VERIFY LOCATION WITH PROVIDER. P.C. TO EXTEND DRAIN LINE FROM TROUGH DRAIN BEVERAGE TABLE (ITEM #65) TO THIS POINT. (SEE GENERAL NOTE 4).

P67 1/2" COLD WATER @ (+48" A.F.F.) P.C. TO EXTEND TO COFFEE BREWER (ITEM #67). ROUGH-IN SHOWN ARE FOR COORDINATION PURPOSES THIS ITEM IS TO BE PROVIDED AND INSTALL BY OTHERS. VERIFY LOCATION WITH PROVIDER.

P73 1/2" HOT AND COLD WATER @ (+12" A.F.F.). P.C. TO EXTEND TO FAUCET MOUNTED ON PREP TABLE SINK (ITEM #73).

P73A 12" X 12" X 8" DEEP FLOOR SINK WITH HALF GRATE. P.C. TO MANIFOLD (2) DRAIN LINES FROM PREP TABLE SINK (ITEM #73) AND EXTEND TO THIS POINT. (SEE GENERAL NOTE 4).

P76 1/2" HOT AND COLD WATER @ (+18" A.F.F.) P.C. TO EXTEND TO FAUCET MOUNTED ON SOILED DISHTABLE (ITEM #76).

P76A 12" X 12" X 8" DEEP FLOOR SINK WITH HALF GRATE. P.C. TO EXTEND DRAIN LINE FROM SOILED DISHTABLE (ITEM #76). TO THIS POINT. (SEE GENERAL NOTE 4).

P78 1/2" HOT WATER @ (+50" A.F.F.) P.C. TO EXTEND TO DISHWASHER (ITEM #20).

P78A 12" X 12" X 8" DEEP FLOOR SINK WITH HALF GRATE. P.C. TO EXTEND DRAIN LINE FROM SOILED DISHTABLE (ITEM #76). P.C. TO EXTEND DRAIN FROM DISHMACHINE (ITEM #78) TO THIS POINT. (SEE GENERAL NOTE 4).

P80 12" X 12" X 8" DEEP FLOOR SINK WITH HALF GRATE. P.C. TO MANIFOLD (3) DRAIN LINES FROM POT AND PAN SINK (ITEM #81) AND EXTEND TO THIS POINT. (SEE GENERAL NOTE 4).

P81 1/2" HOT AND COLD WATER @ (+12" A.F.F.). P.C. TO EXTEND TO FAUCET MOUNTED ON POT AND PAN SINK (ITEM #81).

P82 (STUB-UP) 1/2" COLD WATER. P.C. TO EXTEND TO SOAK SINK FAUCET (ITEM #82) MOUNTED ON SOILED DISHTABLE (ITEM #76).

BAR EQUIPMENT PLUMBING ROUGH-IN NOTES:

SL (2 LOCATIONS) (STUB-UP) 6" PVC CHASE FOR SODA LINES. ROUGH-IN SHOWN ARE FOR COORDINATION PURPOSES THIS ITEM IS TO BE PROVIDED AND INSTALL BY OTHERS. VERIFY LOCATION WITH PROVIDER.

BL (STUB-UP) 6" PVC CHASE FOR BEER LINES. ROUGH-IN SHOWN ARE FOR COORDINATION PURPOSES THIS ITEM IS TO BE PROVIDED AND INSTALL BY OTHERS. VERIFY LOCATION WITH PROVIDER.

PB1 12" X 12" X 8" DEEP FLOOR SINK WITH HALF GRATE. P.C. TO EXTEND DRAIN LINE FROM PASS-THRU COCKTAIL STATION (ITEM #B1) AND UNDERBAR ICE BIN (ITEM #B4) TO THIS POINT. (SEE GENERAL NOTE 4).

PB2 (2 LOCATIONS) 1/2" 120 DEG. HOT AND COLD WATER @ (+12" A.F.F.) P.C. TO EXTEND TO UNDERBAR HAND SINK (ITEM #2)

PB2A (2 LOCATIONS) 1-1/2" WASTE @ (+10" A.F.F.) P.C. TO EXTEND TO UNDERBAR HAND SINK (ITEM #2)

PB7 12" X 12" X 8" DEEP FLOOR SINK WITH HALF GRATE. P.C. TO EXTEND DRAIN LINE FROM UNDERBAR ICE BIN (ITEM #B7) AND DRAIN BOARD (ITEM #B12) TO THIS POINT. (SEE GENERAL NOTE 4).

PB9 12" X 12" X 8" DEEP FLOOR SINK WITH HALF GRATE. P.C. TO EXTEND DRAIN LINE FROM UNDERBAR ICE BIN (ITEM #B9) AND DRAIN BOARD (ITEM #B10) TO THIS POINT. (SEE GENERAL NOTE 4).

PB13 12" X 12" X 8" DEEP FLOOR SINK WITH HALF GRATE. P.C. TO EXTEND DRAIN LINE FROM BEER TROUGH MOUNTED ON BACK BAR COOLER (ITEM #B13) TO THIS POINT. (SEE GENERAL NOTE 4).

PB14 1/2" HOT WATER @ (+15" A.F.F.) P.C. TO EXTEND TO GLASS WASHER (ITEM #14). ROUGH-IN SHOWN ARE FOR COORDINATION PURPOSES ONLY. THIS ITEM IS TO BE PROVIDED AND INSTALLED BY OTHERS. VERIFY LOCATION WITH PROVIDER.

PB14A 12" X 12" X 8" DEEP FLOOR SINK WITH HALF GRATE. P.C. TO EXTEND DRAIN LINE FROM GLASS WASHER (ITEM #B14) TO THIS POINT. (SEE GENERAL NOTE 4). ROUGH-IN SHOWN ARE FOR COORDINATION PURPOSES ONLY. THIS ITEM IS TO BE PROVIDED AND INSTALLED BY OTHERS. VERIFY LOCATION WITH PROVIDER.

GENERAL NOTES THIS SHEET:

1. ALL SEWER AND STORM DRAIN PIPING SHALL BE RUN BELOW SLAB UNLESS NOTED OTHERWISE. HANG FROM SLAB PER DETAIL.
2. VENT PIPING SHALL BE RUN ABOVE CEILING OR TIGHT TO STRUCTURE.
3. PROVIDE TRAP PRIMERS ON ALL FLOOR DRAINS.
4. INSULATE HORIZONTAL RUN OF ALL WASTE PIPING RECEIVING A/C CONDENSATE.
5. INSULATE ROOF DRAINS AND HORIZONTAL STORM DRAIN PIPING RUNS ABOVE GRADE.
6. ALL COLD WATER, HOT WATER AND HOT WATER RE-CIRCULATING PIPING SHALL BE RUN ABOVE CEILING OR TIGHT TO STRUCTURE. STORM DRAIN PIPING ABOVE GRADE SHALL BE RUN ABOVE CEILING OR TIGHT TO STRUCTURE.
7. ALL WATER PIPING SHALL BE 3/4" UNLESS NOTED OTHERWISE.
8. PROVIDE AIR CHAMBERS ON ALL DOMESTIC WATER BRANCH PIPING SERVING FIXTURES.
9. PROVIDE ISOLATION VALVES IN THE HOT AND COLD WATER PIPING TO ALL FIXTURE GROUPS.
10. MINIMUM VENT THRU ROOF SHALL BE 2".
11. ALL FIXTURES SHALL BE INSTALLED LEVEL AND TRUE, CENTER FIXTURES WHERE APPLICABLE, FOR INSTANCE WATER CLOSETS IN NON-ADA STALLS.
12. ALL ADA FIXTURES SHALL BE INSTALLED PER ADA GUIDELINES.
13. FLOOR DRAINS IN TOILET ROOMS SHALL BE COORDINATED AND LOCATED PER ARCHITECTURAL FLOOR PLANS.
14. FLOOR DRAINS USED FOR AIR UNITS SHALL BE LOCATED AS CLOSE TO EDGE OF UNIT AS POSSIBLE. COORDINATE LOCATION WITH SUBMITTED UNIT DIMENSIONAL DATA.
15. PLUMBING SHALL CONFORM TO THE INTERNATIONAL PLUMBING CODE.
16. ALL LAVATORIES, HANDWASH SINKS AND KITCHEN SINKS SHALL BE PROVIDED WITH A THERMOSTATIC MIXING VALVE LOCATED ABOVE THE CEILING WITH THE HW PIPED TO THE LAVATORY FIXTURE GROUP HW INLET(S). FOR 1 TO 6 LAVATORIES, USE LEONARD MODEL LF-370 OR LAWLER MODEL 570 WITH 3/4" FITTINGS. 3-COMPARTMENT SINK AND DISHWASHER DO NOT NEED MIXING VALVES.
17. PLUMBING DRAWINGS ARE SCHEMATIC IN NATURE. COORDINATE PIPE ROUTING WITH STRUCTURE AND UNDERGROUND SUPPORTS. ADJUST LOCATION AS REQUIRED.
18. REFER TO KITCHEN EQUIPMENT PLAN FOR KITCHEN EQUIPMENT GENERAL NOTES.
19. SEE SHEETS P3.0 - P3.2 FOR PLUMBING DETAILS.

SPECIFIC NOTES THIS SHEET:

1 TRAP PRIMER ABOVE CEILING. RUN 1/2" TRAP PRIMER LINE DOWN WALL UNDERGROUND TO FLOOR DRAINS.

2 RUN 3/4" CW LINE TO EXISTING HOSE BIBBS. VERIFY ON SITE.

ARCHITECTURE

CRUMB ENGINEERING
4609 Fairfield Street
P-504.455.4450
Metairie, La 70006
crumbengineering.com

SMOKEY BONES
UTICA, MI

COPYRIGHT
THESE DOCUMENTS ARE PROTECTED BY UNITED STATES COPYRIGHT LAW. THEY HAVE BEEN PREPARED SPECIFICALLY FOR THE PROJECT IDENTIFIED AND ARE NOT SUITABLE FOR USE ON ANY OTHER PROJECT OR AT ANY OTHER LOCATION WITHOUT THE EXPRESS WRITTEN APPROVAL AND PARTICIPATION OF ARCHITECTURE. REPRODUCTION OF THESE DOCUMENTS MUST BE AUTHORIZED BY THE ARCHITECT. ALL RIGHTS ARE RESERVED TO iARCHITECTURE.

STATE OF MICHIGAN
JASON T. CRUMB
License No. 6201070180
LICENSED PROFESSIONAL ENGINEER

REVISIONS	
NO.	DATE

PROJECT NO: IA 2119

SHEET P1.1

DATE 11/10/2021

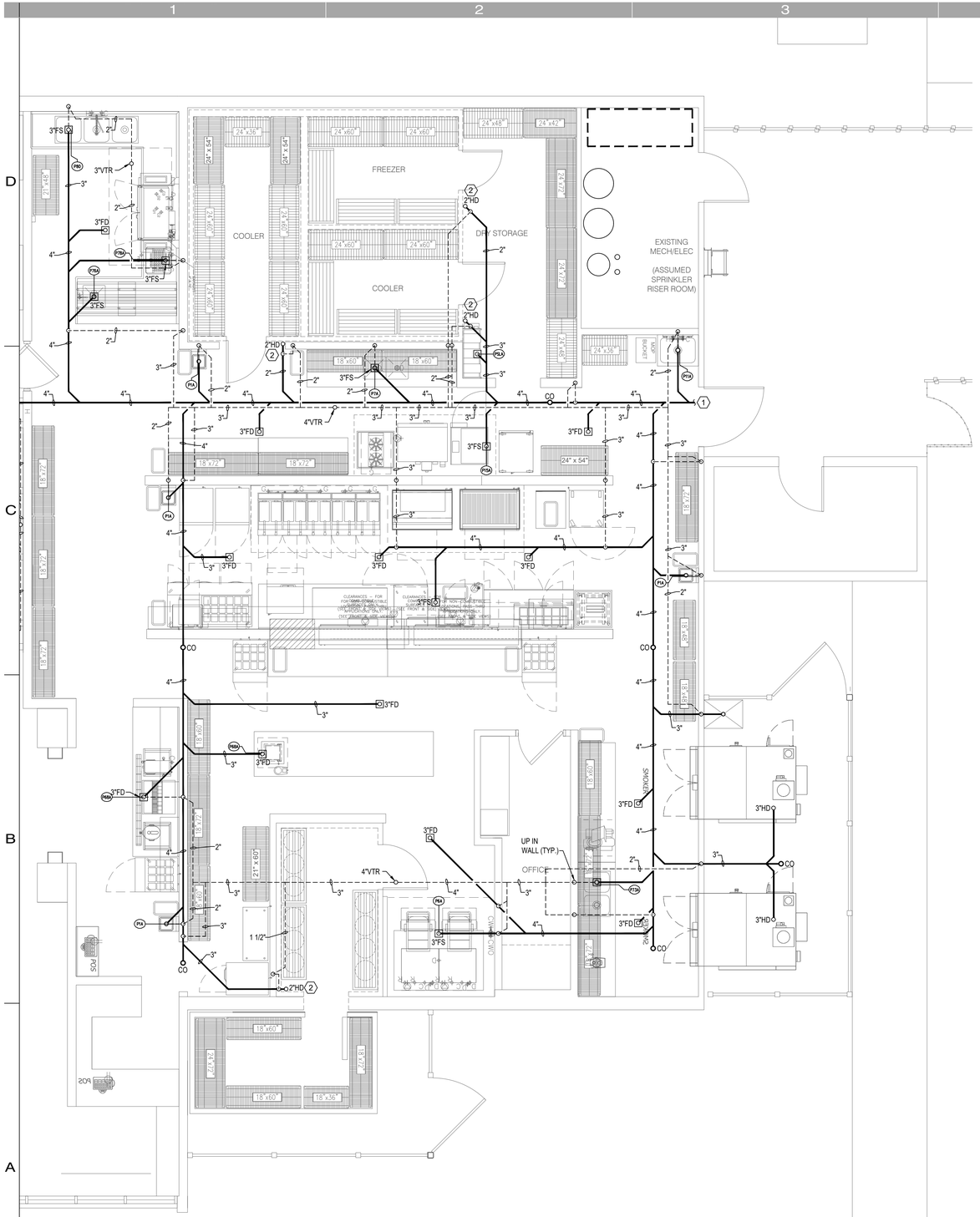

1 P2.0 ENLARGED PLAN - SANITARY PLAN
1/4" = 1'-0"

K1 P.C. TO INSTALL K.E.C. FURNISHED MECHANICAL GAS SHUT-OFF VALVE IN MAIN GAS SUPPLY LINE IN ACCESSIBLE LOCATION PRIOR TO BRANCHING GAS SERVICE TO EQUIPMENT. P.C. TO VERIFY GAS LINE SIZE PER VALVE.

KITCHEN EQUIPMENT PLUMBING ROUGH-IN NOTES:

G14 3/4" NPT 100,000 BTU SERVICE @ (24" A.F.F.) P.C. TO EXTEND TO DOUBLE DECK CONVECTION OVEN MANIFOLD (ITEM #14). THRU F.F.E.C. FURNISHED QUICK DISCONNECT.

G15 3/4" NPT 50,000 BTU SERVICE @ (24" A.F.F.) P.C. TO EXTEND TO RETHERMALIZER (ITEM #15). THRU F.F.E.C. FURNISHED QUICK DISCONNECT.

G16 3/4" NPT 52,000 BTU SERVICE @ (24" A.F.F.) P.C. TO EXTEND TO HOT PLATE (ITEM #16). THRU F.F.E.C. FURNISHED QUICK DISCONNECT.

G30 1-1/4" NPT MANIFOLD 525,000 BTU SERVICE @ (24" A.F.F.) P.C. TO EXTEND TO FRYERbBATTERY (ITEM #30).

G34 3/4" NPT 136,000 BTU SERVICE @ (24" A.F.F.) P.C. TO EXTEND TO CHARBROILER (ITEM #34). THRU F.F.E.C. FURNISHED QUICK DISCONNECT.

G35 3/4" NPT 100,000 BTU SERVICE @ (24" A.F.F.) P.C. TO EXTEND TO GRIDDLE (ITEM #36). THRU F.F.E.C. FURNISHED QUICK DISCONNECT.

PSL 1/2" COLD WATER @ (+60" A.F.F.) FOR SODA SYSTEM. ROUGH-IN SHOWN ARE FOR COORDINATION PURPOSES ONLY. THIS ITEM IS TO BE PROVIDED AND INSTALLED BY OTHERS. VERIFY LOCATION WITH PROVIDER.

PSLA FLOOR DRAIN FOR SODA SYSTEM. ROUGH-IN SHOWN ARE FOR COORDINATION PURPOSES ONLY. THIS ITEM IS TO BE PROVIDED AND INSTALLED BY OTHERS. VERIFY LOCATION WITH PROVIDER.

P1 (4 LOCATIONS) 1/2" 120 DEG. HOT AND COLD WATER @ (+18" A.F.F.). P.C. TO EXTEND TO FAUCET MOUNTED ON HAND SINK (ITEM #1).

P1A (4 LOCATIONS) 1-1/2" WASTE @ (+15" A.F.F.) P.C. TO EXTEND DRAIN FROM HAND SINK (ITEM #1) TO THIS POINT.

P6 1/2" COLD WATER @ (+66" A.F.F.) P.C. TO EXTEND TO ICE MACHINE (ITEM #6). THRU F.F.E.C. FURNISHED WATER FILTER.

P6A 12" X 12" X 8" DEEP FLOOR SINK WITH HALF GRATE. P.C. TO EXTEND DRAIN LINE FROM ICE BIN (ITEM #6) TO THIS POINT. (SEE GENERAL NOTE 4).

P7 1/2" HOT AND COLD WATER @ (+18" A.F.F.) P.C. TO EXTEND TO FAUCET MOUNTED ON PREP TABLE (ITEM #7).

P7A 12" X 12" X 8" DEEP FLOOR SINK WITH HALF GRATE. P.C. TO MANIFOLD DRAIN LINES FROM 2 COMPARTMENT SINK (ITEM #7) AND EXTEND TO THIS POINT. (SEE GENERAL NOTE 4).

P11 1/2" HOT AND COLD WATER @ (+36" A.F.F.) P.C. TO EXTEND TO WALL MOUNTED FAUCET FOR MOP SINK (ITEM #11)

P11A (STUB-UP) 3" WASTE TRAPPED BELOW FLOOR. P.C. TO EXTEND TO DRAIN IN MOP SINK.

P15 1/2" COLD WATER @ (+12" A.F.F.) P.C. TO EXTEND TO RETHERMALIZER (ITEM #15).

P15A 12" X 12" X 8" DEEP FLOOR SINK WITH HALF GRATE. P.C. TO EXTEND DRAIN LINE FROM RETHERMALIZER (ITEM #15) TO THIS POINT. (SEE GENERAL NOTE 4).

P42 12" X 12" X 8" DEEP FLOOR SINK WITH HALF GRATE. P.C. TO EXTEND DRAIN LINE FROM HOT FOOD WELL (ITEM #42) TO THIS POINT. (SEE GENERAL NOTE 4).

P56 12" X 12" X 8" DEEP FLOOR SINK WITH HALF GRATE. P.C. TO EXTEND DRAIN LINE FROM ICE CREAM DIPPING CABINET (ITEM #56) TO THIS POINT. (SEE GENERAL NOTE 4).

P68 1/2" COLD WATER @ (+46" A.F.F.) P.C. TO EXTEND TO SODA DISPENSER (ITEM #68). ROUGH-IN SHOWN ARE FOR COORDINATION PURPOSES THIS ITEM IS TO BE PROVIDED AND INSTALL BY OTHERS. VERIFY LOCATION WITH PROVIDER.

P68A 12" X 12" X 8" DEEP FLOOR SINK WITH HALF GRATE. P.C. TO EXTEND DRAIN LINE FROM SODA DISPENSER (ITEM #68) TO THIS POINT. ROUGH-IN SHOWN ARE FOR COORDINATION PURPOSES THIS ITEM IS TO BE PROVIDED AND INSTALL BY OTHERS. VERIFY LOCATION WITH PROVIDER. P.C. TO EXTEND DRAIN LINE FROM TROUGH DRAIN BEVERAGE TABLE (ITEM #65) TO THIS POINT. (SEE GENERAL NOTE 4).

P67 1/2" COLD WATER @ (+48" A.F.F.) P.C. TO EXTEND TO COFFEE BREWER (ITEM #67). ROUGH-IN SHOWN ARE FOR COORDINATION PURPOSES THIS ITEM IS TO BE PROVIDED AND INSTALL BY OTHERS. VERIFY LOCATION WITH PROVIDER.

P73 1/2" HOT AND COLD WATER @ (+12" A.F.F.). P.C. TO EXTEND TO FAUCET MOUNTED ON PREP TABLE SINK (ITEM #73).

P73A 12" X 12" X 8" DEEP FLOOR SINK WITH HALF GRATE. P.C. TO MANIFOLD (2) DRAIN LINES FROM PREP TABLE SINK (ITEM #73) AND EXTEND TO THIS POINT. (SEE GENERAL NOTE 4).

P76 1/2" HOT AND COLD WATER @ (+18" A.F.F.) P.C. TO EXTEND TO FAUCET MOUNTED ON SOILED DISHTABLE (ITEM #76).

P76A 12" X 12" X 8" DEEP FLOOR SINK WITH HALF GRATE. P.C. TO EXTEND DRAIN LINE FROM SOILED DISHTABLE (ITEM #76). TO THIS POINT. (SEE GENERAL NOTE 4).

P78 1/2" HOT WATER @ (+50" A.F.F.) P.C. TO EXTEND TO DISHWASHER (ITEM #20).

P78A 12" X 12" X 8" DEEP FLOOR SINK WITH HALF GRATE. P.C. TO EXTEND DRAIN LINE FROM SOILED DISHTABLE (ITEM #76). P.C. TO EXTEND DRAIN FROM DISHMACHINE (ITEM #78) TO THIS POINT. (SEE GENERAL NOTE 4).

P80 12" X 12" X 8" DEEP FLOOR SINK WITH HALF GRATE. P.C. TO MANIFOLD (3) DRAIN LINES FROM POT AND PAN SINK (ITEM #81) AND EXTEND TO THIS POINT. (SEE GENERAL NOTE 4).

P81 1/2" HOT AND COLD WATER @ (+12" A.F.F.). P.C. TO EXTEND TO FAUCET MOUNTED ON POT AND PAN SINK (ITEM #81).

P82 (STUB-UP) 1/2" COLD WATER. P.C. TO EXTEND TO SOAK SINK FAUCET (ITEM #82) MOUNTED ON SOILED DISHTABLE (ITEM #76).

BAR EQUIPMENT PLUMBING ROUGH-IN NOTES:

SL (2 LOCATIONS) (STUB-UP) 6" PVC CHASE FOR SODA LINES. ROUGH-IN SHOWN ARE FOR COORDINATION PURPOSES THIS ITEM IS TO BE PROVIDED AND INSTALL BY OTHERS. VERIFY LOCATION WITH PROVIDER.

BL (STUB-UP) 6" PVC CHASE FOR BEER LINES. ROUGH-IN SHOWN ARE FOR COORDINATION PURPOSES THIS ITEM IS TO BE PROVIDED AND INSTALL BY OTHERS. VERIFY LOCATION WITH PROVIDER.

PB1 12" X 12" X 8" DEEP FLOOR SINK WITH HALF GRATE. P.C. TO EXTEND DRAIN LINE FROM PASS-THRU COCKTAIL STATION (ITEM #B1) AND UNDERBAR ICE BIN (ITEM #B4) TO THIS POINT. (SEE GENERAL NOTE 4).

PB2 (2 LOCATIONS) 1/2" 120 DEG. HOT AND COLD WATER @ (+12" A.F.F.) P.C. TO EXTEND TO UNDERBAR HAND SINK (ITEM #2)

PB2A (2 LOCATIONS) 1-1/2" WASTE @ (+10" A.F.F.) P.C. TO EXTEND TO UNDERBAR HAND SINK (ITEM #2)

PB7 12" X 12" X 8" DEEP FLOOR SINK WITH HALF GRATE. P.C. TO EXTEND DRAIN LINE FROM UNDERBAR ICE BIN (ITEM #B7) AND DRAIN BOARD (ITEM #B12) TO THIS POINT. (SEE GENERAL NOTE 4).

PB9 12" X 12" X 8" DEEP FLOOR SINK WITH HALF GRATE. P.C. TO EXTEND DRAIN LINE FROM UNDERBAR ICE BIN (ITEM #B9) AND DRAIN BOARD (ITEM #B10) TO THIS POINT. (SEE GENERAL NOTE 4).

PB13 12" X 12" X 8" DEEP FLOOR SINK WITH HALF GRATE. P.C. TO EXTEND DRAIN LINE FROM BEER TROUGH MOUNTED ON BACK BAR COOLER (ITEM #B13) TO THIS POINT. (SEE GENERAL NOTE 4).

PB14 1/2" HOT WATER @ (+15" A.F.F.) P.C. TO EXTEND TO GLASS WASHER (ITEM #14). ROUGH-IN SHOWN ARE FOR COORDINATION PURPOSES ONLY. THIS ITEM IS TO BE PROVIDED AND INSTALLED BY OTHERS. VERIFY LOCATION WITH PROVIDER.

PB14A 12" X 12" X 8" DEEP FLOOR SINK WITH HALF GRATE. P.C. TO EXTEND DRAIN LINE FROM GLASS WASHER (ITEM #B14) TO THIS POINT. (SEE GENERAL NOTE 4). ROUGH-IN SHOWN ARE FOR COORDINATION PURPOSES ONLY. THIS ITEM IS TO BE PROVIDED AND INSTALLED BY OTHERS. VERIFY LOCATION WITH PROVIDER.

GENERAL NOTES THIS SHEET:

1. ALL SEWER AND STORM DRAIN PIPING SHALL BE RUN BELOW SLAB UNLESS NOTED OTHERWISE. HANG FROM SLAB PER DETAIL.
2. VENT PIPING SHALL BE RUN ABOVE CEILING OR TIGHT TO STRUCTURE.
3. PROVIDE TRAP PRIMERS ON ALL FLOOR DRAINS.
4. INSULATE HORIZONTAL RUN OF ALL WASTE PIPING RECEIVING A/C CONDENSATE.
5. INSULATE ROOF DRAINS AND HORIZONTAL STORM DRAIN PIPING RUNS ABOVE GRADE.
6. ALL COLD WATER, HOT WATER AND HOT WATER RE-CIRCULATING PIPING SHALL BE RUN ABOVE CEILING OR TIGHT TO STRUCTURE. STORM DRAIN PIPING ABOVE GRADE SHALL BE RUN ABOVE CEILING OR TIGHT TO STRUCTURE.
7. ALL WATER PIPING SHALL BE 3/4" UNLESS NOTED OTHERWISE.
8. PROVIDE AIR CHAMBERS ON ALL DOMESTIC WATER BRANCH PIPING SERVING FIXTURES.
9. PROVIDE ISOLATION VALVES IN THE HOT AND COLD WATER PIPING TO ALL FIXTURE GROUPS.
10. MINIMUM VENT THRU ROOF SHALL BE 3". (1)
11. ALL FIXTURES SHALL BE INSTALLED LEVEL AND TRUE, CENTER FIXTURES WHERE APPLICABLE, FOR INSTANCE WATER CLOSETS IN NON-ADA STALLS.
12. ALL ADA FIXTURES SHALL BE INSTALLED PER ADA GUIDELINES.
13. FLOOR DRAINS IN TOILET ROOMS SHALL BE COORDINATED AND LOCATED PER ARCHITECTURAL FLOOR PLANS.
14. FLOOR DRAINS USED FOR AIR UNITS SHALL BE LOCATED AS CLOSE TO EDGE OF UNIT AS POSSIBLE. COORDINATE LOCATION WITH SUBMITTED UNIT DIMENSIONAL DATA.
15. PLUMBING SHALL CONFORM TO THE 2015 MICHIGAN PLUMBING CODE. (1)
16. ALL LAVATORIES, HANDWASH SINKS AND KITCHEN SINKS SHALL BE PROVIDED WITH A THERMOSTATIC MIXING VALVE LOCATED ABOVE THE CEILING WITH THE HW PIPED TO THE LAVATORY FIXTURE GROUP HW INLET(S). FOR 1 TO 6 LAVATORIES, USE LEONARD MODEL LF-370 OR LAWLER MODEL 570 WITH 3/4" FITTINGS. 3-COMPARTMENT SINK AND DISHWASHER DO NOT NEED MIXING VALVES.
17. PLUMBING DRAWINGS ARE SCHEMATIC IN NATURE. COORDINATE PIPE ROUTING WITH STRUCTURE AND UNDERGROUND SUPPORTS. ADJUST LOCATION AS REQUIRED.
18. REFER TO KITCHEN EQUIPMENT PLAN FOR KITCHEN EQUIPMENT GENERAL NOTES.
19. SEE SHEETS P3.0 - P3.2 FOR PLUMBING DETAILS.

SPECIFIC NOTES THIS SHEET:

(1) CONNECT TO EXISTING GREASE WASTE. VERIFY EXACT LOCATION ON SITE.

(2) RUN EXISTING COOLER/ FREEZER CONDENSATE PIPING TO HUB DRAIN. VERIFY EXACT LOCATION ON SITE.

iARCHITECTURE

SMOKEY BONES
UTICA, MI

CRUMB ENGINEERING
4609 Fairfield Street
P-504.455.4450
Metairie, La 70006
crumbengineering.com

COPYRIGHT
THESE DOCUMENTS ARE PROTECTED BY UNITED STATES COPYRIGHT LAW. THEY HAVE BEEN PREPARED SPECIFICALLY FOR THE PROJECT IDENTIFIED AND ARE NOT SUITABLE FOR USE ON ANY OTHER PROJECT OR AT ANY OTHER LOCATION WITHOUT THE EXPRESS WRITTEN APPROVAL AND PARTICIPATION OF iARCHITECTURE. REPRODUCTION OF THESE DOCUMENTS MUST BE AUTHORIZED BY THE ARCHITECT. ALL RIGHTS ARE RESERVED TO iARCHITECTURE.

STATE OF MICHIGAN
JASON T. CRUMB
License No. 6201070180
LICENSED PROFESSIONAL ENGINEER

REVISIONS	
NO.	DATE
1	1-4-22

PROJECT NO: IA 2119

SHEET P2.0

DATE 11/10/2021

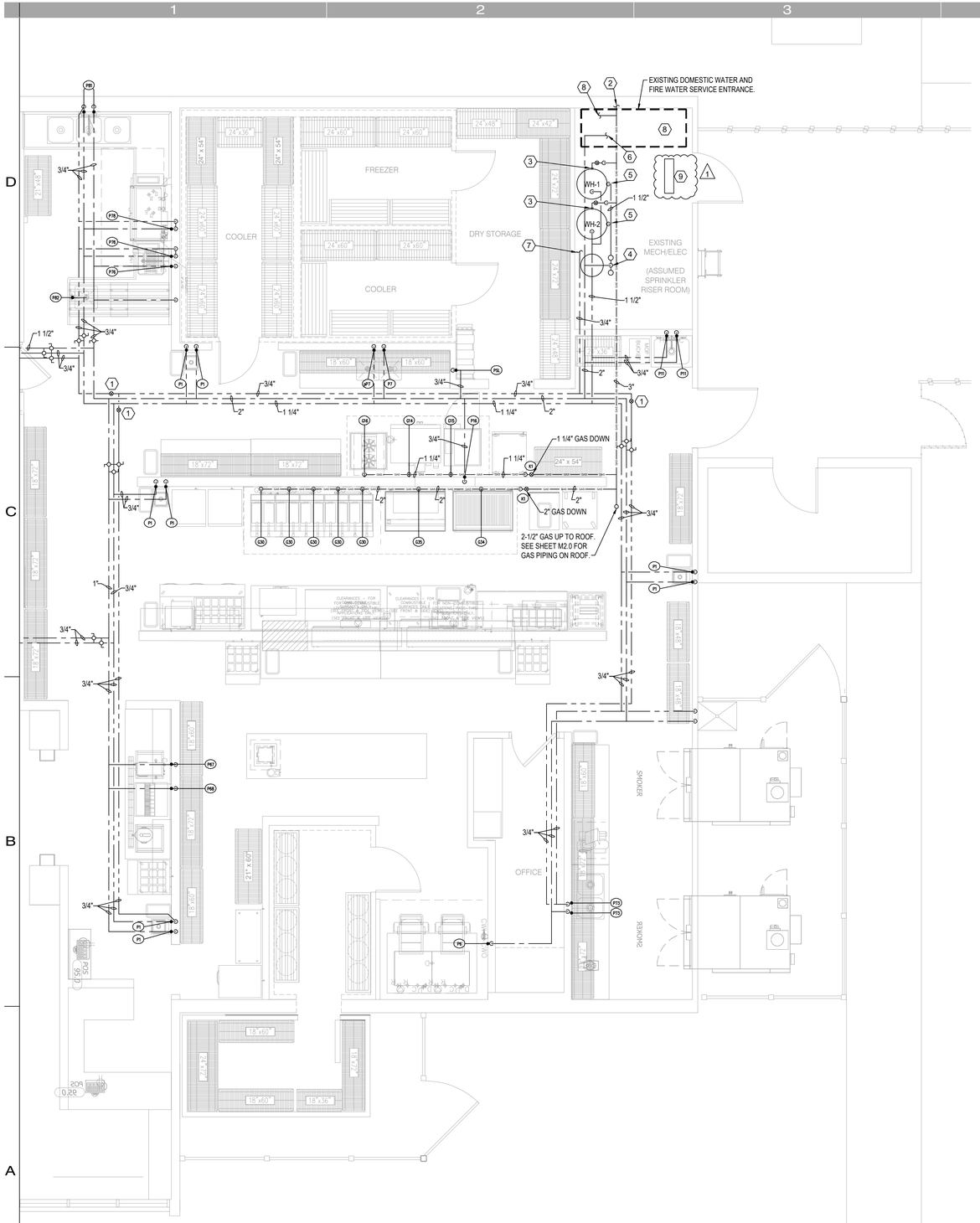

1 P2.1 ENLARGED PLAN - WATER AND GAS PLAN

1/4" = 1'-0"

K1 P.C. TO INSTALL K.E.C. FURNISHED MECHANICAL GAS SHUT-OFF VALVE IN MAIN GAS SUPPLY LINE IN ACCESSIBLE LOCATION PRIOR TO BRANCHING GAS SERVICE TO EQUIPMENT. P.C. TO VERIFY GAS LINE SIZE PER VALVE.

KITCHEN EQUIPMENT PLUMBING ROUGH-IN NOTES:

G14 3/4" NPT 100,000 BTU SERVICE @ (24" A.F.F.) P.C. TO EXTEND TO DOUBLE DECK CONVECTION OVEN MANIFOLD (ITEM #14). THRU F.F.E.C. FURNISHED QUICK DISCONNECT.

G15 3/4" NPT 50,000 BTU SERVICE @ (24" A.F.F.) P.C. TO EXTEND TO RETHERMALIZER (ITEM #15). THRU F.F.E.C. FURNISHED QUICK DISCONNECT.

G16 3/4" NPT 52,000 BTU SERVICE @ (24" A.F.F.) P.C. TO EXTEND TO HOT PLATE (ITEM #16). THRU F.F.E.C. FURNISHED QUICK DISCONNECT.

G30 1-1/4" NPT MANIFOLD 525,000 BTU SERVICE @ (24" A.F.F.) P.C. TO EXTEND TO FRYERrbBATTERY (ITEM #30).

G34 3/4" NPT 136,000 BTU SERVICE @ (24" A.F.F.) P.C. TO EXTEND TO CHARBROILER (ITEM #34). THRU F.F.E.C. FURNISHED QUICK DISCONNECT.

G35 3/4" NPT 100,000 BTU SERVICE @ (24" A.F.F.) P.C. TO EXTEND TO GRIDDLE (ITEM #36). THRU F.F.E.C. FURNISHED QUICK DISCONNECT.

PSL 1/2" COLD WATER @ (+60" A.F.F.) FOR SODA SYSTEM. ROUGH-IN SHOWN ARE FOR COORDINATION PURPOSES ONLY. THIS ITEM IS TO BE PROVIDED AND INSTALLED BY OTHERS. VERIFY LOCATION WITH PROVIDER.

PSLA FLOOR DRAIN FOR SODA SYSTEM. ROUGH-IN SHOWN ARE FOR COORDINATION PURPOSES ONLY. THIS ITEM IS TO BE PROVIDED AND INSTALLED BY OTHERS. VERIFY LOCATION WITH PROVIDER.

P1 (4 LOCATIONS) 1/2" 120 DEG. HOT AND COLD WATER @ (+18" A.F.F.). P.C. TO EXTEND TO FAUCET MOUNTED ON HAND SINK (ITEM #1).

P1A (4 LOCATIONS) 1-1/2" WASTE @ (+15" A.F.F.) P.C. TO EXTEND DRAIN FROM HAND SINK (ITEM #1) TO THIS POINT.

P6 1/2" COLD WATER @ (+66" A.F.F.) P.C. TO EXTEND TO ICE MACHINE (ITEM #6). THRU F.F.E.C. FURNISHED WATER FILTER.

P6A 12" X 12" X 8" DEEP FLOOR SINK WITH HALF GRATE. P.C. TO EXTEND DRAIN LINE FROM ICE BIN (ITEM #6) TO THIS POINT. (SEE GENERAL NOTE 4).

P7 1/2" HOT AND COLD WATER @ (+18" A.F.F.) P.C. TO EXTEND TO FAUCET MOUNTED ON PREP TABLE (ITEM #7).

P7A 12" X 12" X 8" DEEP FLOOR SINK WITH HALF GRATE. P.C. TO MANIFOLD DRAIN LINES FROM 2 COMPARTMENT SINK (ITEM #7) AND EXTEND TO THIS POINT. (SEE GENERAL NOTE 4).

P11 1/2" HOT AND COLD WATER @ (+36" A.F.F.) P.C. TO EXTEND TO WALL MOUNTED FAUCET FOR MOP SINK (ITEM #11)

P11A (STUB-UP) 3" WASTE TRAPPED BELOW FLOOR. P.C. TO EXTEND TO DRAIN IN MOP SINK.

P15 1/2" COLD WATER @ (+12" A.F.F.) P.C. TO EXTEND TO RETHERMALIZER (ITEM #15).

P15A 12" X 12" X 8" DEEP FLOOR SINK WITH HALF GRATE. P.C. TO EXTEND DRAIN LINE FROM RETHERMALIZER (ITEM #15) TO THIS POINT. (SEE GENERAL NOTE 4).

P42 12" X 12" X 8" DEEP FLOOR SINK WITH HALF GRATE. P.C. TO EXTEND DRAIN LINE FROM HOT FOOD WELL (ITEM #42) TO THIS POINT. (SEE GENERAL NOTE 4).

P56 12" X 12" X 8" DEEP FLOOR SINK WITH HALF GRATE. P.C. TO EXTEND DRAIN LINE FROM ICE CREAM DIPPING CABINET (ITEM #56) TO THIS POINT. (SEE GENERAL NOTE 4).

P68 1/2" COLD WATER @ (+48" A.F.F.) P.C. TO EXTEND TO SODA DISPENSER (ITEM #68). ROUGH-IN SHOWN ARE FOR COORDINATION PURPOSES THIS ITEM IS TO BE PROVIDED AND INSTALL BY OTHERS. VERIFY LOCATION WITH PROVIDER.

P68A 12" X 12" X 8" DEEP FLOOR SINK WITH HALF GRATE. P.C. TO EXTEND DRAIN LINE FROM SODA DISPENSER (ITEM #68) TO THIS POINT. ROUGH-IN SHOWN ARE FOR COORDINATION PURPOSES THIS ITEM IS TO BE PROVIDED AND INSTALL BY OTHERS. VERIFY LOCATION WITH PROVIDER. P.C. TO EXTEND DRAIN LINE FROM TROUGH DRAIN BEVERAGE TABLE (ITEM #65) TO THIS POINT. (SEE GENERAL NOTE 4).

P67 1/2" COLD WATER @ (+48" A.F.F.) P.C. TO EXTEND TO COFFEE BREWER (ITEM #67). ROUGH-IN SHOWN ARE FOR COORDINATION PURPOSES THIS ITEM IS TO BE PROVIDED AND INSTALL BY OTHERS. VERIFY LOCATION WITH PROVIDER.

P73 1/2" HOT AND COLD WATER @ (+12" A.F.F.). P.C. TO EXTEND TO FAUCET MOUNTED ON PREP TABLE SINK (ITEM #73).

P73A 12" X 12" X 8" DEEP FLOOR SINK WITH HALF GRATE. P.C. TO MANIFOLD (2) DRAIN LINES FROM PREP TABLE SINK (ITEM #73) AND EXTEND TO THIS POINT. (SEE GENERAL NOTE 4).

P76 1/2" HOT AND COLD WATER @ (+18" A.F.F.) P.C. TO EXTEND TO FAUCET MOUNTED ON SOILED DISHTABLE (ITEM #76).

P76A 12" X 12" X 8" DEEP FLOOR SINK WITH HALF GRATE. P.C. TO EXTEND DRAIN LINE FROM SOILED DISHTABLE (ITEM #76). TO THIS POINT. (SEE GENERAL NOTE 4).

P78 1/2" HOT WATER @ (+50" A.F.F.) P.C. TO EXTEND TO DISHWASHER (ITEM #20).

P78A 12" X 12" X 8" DEEP FLOOR SINK WITH HALF GRATE. P.C. TO EXTEND DRAIN LINE FROM SOILED DISHTABLE (ITEM #76). P.C. TO EXTEND DRAIN FROM DISHMACHINE (ITEM #78) TO THIS POINT. (SEE GENERAL NOTE 4).

P80 12" X 12" X 8" DEEP FLOOR SINK WITH HALF GRATE. P.C. TO MANIFOLD (3) DRAIN LINES FROM POT AND PAN SINK (ITEM #81) AND EXTEND TO THIS POINT. (SEE GENERAL NOTE 4).

P81 1/2" HOT AND COLD WATER @ (+12" A.F.F.). P.C. TO EXTEND TO FAUCET MOUNTED ON POT AND PAN SINK (ITEM #81).

P82 (STUB-UP) 1/2" COLD WATER. P.C. TO EXTEND TO SOAK SINK FAUCET (ITEM #82) MOUNTED ON SOILED DISHTABLE (ITEM #76).

BAR EQUIPMENT PLUMBING ROUGH-IN NOTES:

SL (2 LOCATIONS) (STUB-UP) 6" PVC CHASE FOR SODA LINES. ROUGH-IN SHOWN ARE FOR COORDINATION PURPOSES THIS ITEM IS TO BE PROVIDED AND INSTALL BY OTHERS. VERIFY LOCATION WITH PROVIDER.

BL (STUB-UP) 6" PVC CHASE FOR BEER LINES. ROUGH-IN SHOWN ARE FOR COORDINATION PURPOSES THIS ITEM IS TO BE PROVIDED AND INSTALL BY OTHERS. VERIFY LOCATION WITH PROVIDER.

PB1 12" X 12" X 8" DEEP FLOOR SINK WITH HALF GRATE. P.C. TO EXTEND DRAIN LINE FROM PASS-THRU COCKTAIL STATION (ITEM #B1) AND UNDERBAR ICE BIN (ITEM #B4) TO THIS POINT. (SEE GENERAL NOTE 4).

PB2 (2 LOCATIONS) 1/2" 120 DEG. HOT AND COLD WATER @ (+12" A.F.F.) P.C. TO EXTEND TO UNDERBAR HAND SINK (ITEM #2)

PB2A (2 LOCATIONS) 1-1/2" WASTE @ (+10" A.F.F.) P.C. TO EXTEND TO UNDERBAR HAND SINK (ITEM #2)

PB7 12" X 12" X 8" DEEP FLOOR SINK WITH HALF GRATE. P.C. TO EXTEND DRAIN LINE FROM UNDERBAR ICE BIN (ITEM #B7) AND DRAIN BOARD (ITEM #B12) TO THIS POINT. (SEE GENERAL NOTE 4).

PB9 12" X 12" X 8" DEEP FLOOR SINK WITH HALF GRATE. P.C. TO EXTEND DRAIN LINE FROM UNDERBAR ICE BIN (ITEM #B9) AND DRAIN BOARD (ITEM #B10) TO THIS POINT. (SEE GENERAL NOTE 4).

PB13 12" X 12" X 8" DEEP FLOOR SINK WITH HALF GRATE. P.C. TO EXTEND DRAIN LINE FROM BEER TROUGH MOUNTED ON BACK BAR COOLER (ITEM #B13) TO THIS POINT. (SEE GENERAL NOTE 4).

PB14 1/2" HOT WATER @ (+15" A.F.F.) P.C. TO EXTEND TO GLASS WASHER (ITEM #14). ROUGH-IN SHOWN ARE FOR COORDINATION PURPOSES ONLY. THIS ITEM IS TO BE PROVIDED AND INSTALLED BY OTHERS. VERIFY LOCATION WITH PROVIDER.

PB14A 12" X 12" X 8" DEEP FLOOR SINK WITH HALF GRATE. P.C. TO EXTEND DRAIN LINE FROM GLASS WASHER (ITEM #B14) TO THIS POINT. (SEE GENERAL NOTE 4). ROUGH-IN SHOWN ARE FOR COORDINATION PURPOSES ONLY. THIS ITEM IS TO BE PROVIDED AND INSTALLED BY OTHERS. VERIFY LOCATION WITH PROVIDER.

GENERAL NOTES THIS SHEET:

1. ALL SEWER AND STORM DRAIN PIPING SHALL BE RUN BELOW SLAB UNLESS NOTED OTHERWISE. HANG FROM SLAB PER DETAIL.
2. VENT PIPING SHALL BE RUN ABOVE CEILING OR TIGHT TO STRUCTURE.
3. PROVIDE TRAP PRIMERS ON ALL FLOOR DRAINS.
4. INSULATE HORIZONTAL RUN OF ALL WASTE PIPING RECEIVING A/C CONDENSATE.
5. INSULATE ROOF DRAINS AND HORIZONTAL STORM DRAIN PIPING RUNS ABOVE GRADE.
6. ALL COLD WATER, HOT WATER AND HOT WATER RE-CIRCULATING PIPING SHALL BE RUN ABOVE CEILING OR TIGHT TO STRUCTURE. STORM DRAIN PIPING ABOVE GRADE SHALL BE RUN ABOVE CEILING OR TIGHT TO STRUCTURE.
7. ALL WATER PIPING SHALL BE 3/4" UNLESS NOTED OTHERWISE.
8. PROVIDE AIR CHAMBERS ON ALL DOMESTIC WATER BRANCH PIPING SERVING FIXTURES.
9. PROVIDE ISOLATION VALVES IN THE HOT AND COLD WATER PIPING TO ALL FIXTURE GROUPS.
10. MINIMUM VENT THRU ROOF SHALL BE 2".
11. ALL FIXTURES SHALL BE INSTALLED LEVEL AND TRUE, CENTER FIXTURES WHERE APPLICABLE, FOR INSTANCE WATER CLOSETS IN NON-ADA STALLS.
12. ALL ADA FIXTURES SHALL BE INSTALLED PER ADA GUIDELINES.
13. FLOOR DRAINS IN TOILET ROOMS SHALL BE COORDINATED AND LOCATED PER ARCHITECTURAL FLOOR PLANS.
14. FLOOR DRAINS USED FOR AIR UNITS SHALL BE LOCATED AS CLOSE TO EDGE OF UNIT AS POSSIBLE. COORDINATE LOCATION WITH SUBMITTED UNIT DIMENSIONAL DATA.
15. PLUMBING SHALL CONFORM TO THE INTERNATIONAL PLUMBING CODE.
16. ALL LAVATORIES, HANDWASH SINKS AND KITCHEN SINKS SHALL BE PROVIDED WITH A THERMOSTATIC MIXING VALVE LOCATED ABOVE THE CEILING WITH THE HW PIPED TO THE LAVATORY FIXTURE GROUP HW INLET(S). FOR 1 TO 6 LAVATORIES, USE LEONARD MODEL LF-370 OR LAWLER MODEL 570 WITH 3/4" FITTINGS. 3-COMPARTMENT SINK AND DISHWASHER DO NOT NEED MIXING VALVES.
17. PLUMBING DRAWINGS ARE SCHEMATIC IN NATURE. COORDINATE PIPE ROUTING WITH STRUCTURE AND UNDERGROUND SUPPORTS. ADJUST LOCATION AS REQUIRED.
18. REFER TO KITCHEN EQUIPMENT PLAN FOR KITCHEN EQUIPMENT GENERAL NOTES.
19. SEE SHEETS P3.0 - P3.2 FOR PLUMBING DETAILS.

SPECIFIC NOTES THIS SHEET:

1. HOT WATER CIRCULATING BALANCE VALVE. SET AT 0.5 GPM.
2. CONNECT TO EXISTING GAS SERVICE. VERIFY EXACT LOCATION ON SITE.
3. 1" GAS TO WATER HEATER.
4. WATER SOFTENING SYSTEM BY KEC. RUN 1 1/2" CW TO SOFTENER.
5. SEE 1/P3.1 FOR WATER HEATER DETAIL.
6. CONNECT NEW WATER TO EXISTING 2" CW.
7. TO RECIRCULATING PUMP.
8. RUN 3/4" GAS TO EXISTING GAS UNIT HEATER.
9. REMOVE EXISTING BACKFLOW PREVENTER AND PROVIDE NEW REDUCED PRESSURE BACKFLOW PREVENTER FOR EXISTING COLD WATER SERVICE. EXISTING FUNNEL AND DRAIN TO REMAIN. VERIFY EXACT CONDITIONS ON SITE. MODIFY COLD WATER PIPING AS REQUIRED. CENTER BACKFLOW PREVENTER OVER FUNNEL DRAIN. NEW BACKFLOW PREVENTER SHALL BE WATTS MODEL 009-QT-S OR EQUAL. THE BACKFLOW PREVENTER SHALL BE ASSE 1013 AND AWWA C511-92 LISTED, MEET THE REQUIREMENTS OF MPC 608; AND SHALL BE INSTALLED PER MANUFACTURER'S RECOMMENDATIONS, AND TESTED PER MPC 608. (1)

iARCHITECTURE

SMOKEY BONES
UTICA, MI

CRUMB ENGINEERING
4609 Fairfield Street
Metairie, La 70006
P-504.455.4450
crumbengineering.com

COPYRIGHT
THESE DOCUMENTS ARE PROTECTED BY UNITED STATES COPYRIGHT LAW. THEY HAVE BEEN PREPARED SPECIFSCALLY FOR THE PROJECT IDENTIFIED AND ARE NOT SUITABLE FOR USE ON ANY OTHER PROJECT OR AT ANY OTHER LOCATION WITHOUT THE EXPRESS WRITTEN APPROVAL AND PARTICIPATION OF ARCHITECTURE. REPRODUCTION OF THESE DOCUMENTS MUST BE AUTHORIZED BY THE ARCHITECT. ALL RIGHTS ARE RESERVED TO iARCHITECTURE.

STATE OF MICHIGAN
JASON T. CRUMB
License No. 6201070180
LICENSED PROFESSIONAL ENGINEER

REVISIONS	
NO.	DATE
1	1-4-22
2	1-25-22

PROJECT NO: IA 2119

SHEET P2.1

DATE 11/10/2021

PLUMBING LEGEND

SYMBOL	DESCRIPTION	SYMBOL	DESCRIPTION
— – — – —	COLD WATER	FD	FLOOR DRAIN
— – – —	HOT WATER	HB	HOSE BIBB
— – – – —	HOT WATER CIRCULATING	HW	HOT WATER
– – – – – – – – – –	VENT	RD	ROOF DRAIN
GW	GREASE WASTE	TD	TRENCH DRAIN
SS	SANITARY SEWER	TP	TRAP PRIMER
SD	STORM DRAIN		BALL VALVE
CLG.	CEILING	P 1	PLUMBING RISER DIAGRAM
CO	CLEAN OUT		GATE VALVE
CONN.	CONNECTION		CHECK VALVE
CW	COLD WATER		VALVE IN VERTICAL RISE
DF	DRINKING FOUNTAIN		UNION
DN	DOWN		AIR CHAMBER (10" HIGH PIPE)

PLUMBING FIXTURE SCHEDULE

SYMBOL	FIXTURE	PIPING CONNECTION SIZE				MANUF.	MODEL	ACCESSORIES
		HW	CW	S OR W	VENT			
P-1	WATER CLOSET, FLOOR MOUNTED, FLUSH VALVE	-	1"	4"	2"	AMERICAN STANDARD	2234.015	CHURCH MODEL 9500C SEAT, SLOAN OPTIMA 8111 BATTERY OPERATED SENSOR FLUSH VALVE. COLOR: WHITE.
P-1A	WATER CLOSET, FLOOR MOUNTED, FLUSH VALVE (HANDICAP)	-	1"	4"	2"	AMERICAN STANDARD	2305.100	CHURCH MODEL 9500C SEAT, SLOAN OPTIMA 8111 BATTERY OPERATED SENSOR FLUSH VALVE. COLOR: WHITE.
P-2	URINAL, WALL MOUNTED	-	3/4"	2"	1 1/2"	AMERICAN STANDARD	6541.132	SLOAN OPTIMA PLUS 8186-1.0-LH-MC BATTERY OPERATED SENSOR FLUSH VALVE.
P-2A	URINAL, WALL MOUNTED (HANDICAP)	-	3/4"	2"	1 1/2"	AMERICAN STANDARD	6541.132	SLOAN OPTIMA PLUS 8186-1.0-LH-MC BATTERY OPERATED SENSOR FLUSH VALVE. MOUNT TOP OF RIM 17" A.F.F.
P-3	LAVATORY, COUNTER TOP	1/2"	1/2"	1 1/2"	1 1/2"	INTERGRAL BOWL	INTERGRAL BOWL	FAUCET MODEL 2385.003 AND GRID DRAIN, INSULATE P-TRAP PER ADA REQUIREMENTS.
P-5	FLOOR SINK	-	-	3"	1 1/2"	JOSAM OR EQUAL	49040AS	SQUARE CAST IRON, 8-3/8" DEEP, ACID RESISTING INTERIOR, BOTTOM OUTLET, BRONZE, LIGHT DUTY, ANTI-TILTING SUPER FLO GRATE.
● FD	FLOOR DRAIN	-	-	3"	-	JOSAM OR EQUAL	30000-6S	POLISHED BRONZE "SQUARE TOP" STRAINER DEEP SEAL TRAP # 88104
FDF	FLOOR DRAIN WITH FUNNEL	-	-	3"	-	JOSAM OR EQUAL	30000-E3	GALVANIZED CAST IRON FLOOR DRAIN, TWO PIECE BODY WITH DOUBLE DRAINAGE FLANGE, WEEP HOLES AND ADJUSTABLE SATIN NIKALOY OVAL FUNNEL STRAINER. DEEP SEAL TRAP # 88104.
HD	HUB DRAIN	-	-	4"	2'	JOSAM	88560	GALVANIZED CAST IRON HUB ADAPTER WITH STANDARD CAST IRON SOIL PIPE HUB AND MALE TREADED OUTLET. DEEP SEAL TRAP # 88104.
WH-1 & 2	WATER HEATER	1 1/2"	1 1/2"	-	-	A. O. SMITH	BTH-199	100 GALLON CAPACITY, 94% EFFICIENT. FURNISH WITH 3" PVC CONCENTRIC FLUE PIPING UP TO CONCENTRIC FLUE VENT. A. O. SMITH KIT PART No. 194451-000.

● PROVIDE FLOOR DRAIN WITH TRAP PRIMER IN RESTROOMS AND STORAGE ROOM.

FOOD SERVICE EQUIPMENT PLUMBING ROUGH-IN NOTES

1. ROUGH-IN PLAN SHOWS APPROXIMATE LOCATIONS FOR UTILITY REQUIREMENTS OF FOOD SERVICE EQUIPMENT SPECIFIED (INCLUDING EXISTING AND FUTURE EQUIPMENT) PLUS AREA CLEAN-UP FLOOR DRAINS. CONTRACTOR SHALL FURNISH DIMENSIONED LOCATIONS FROM FINISHED WALLS AND/OR CENTER-LINE OF COLUMNS FOR ALL UTILITIES SHOWN ON CONTRACT DOCUMENT ROUGH-IN DRAWINGS.
2. WHERE POSSIBLE, ALL PLUMBING LINES SHALL EXTEND UP THROUGH AND OUT OF BUILDING WALLS.
3. EXTEND AND CONNECT ALL PLUMBING LINES TO CONNECTION POINTS OF FOOD SERVICE EQUIPMENT - DIVISION 15.
4. FURNISH AND INSTALL LINE SHUT-OFF VALVES ON ALL PLUMBING LINES AT EACH FIXTURE - DIVISION 15.
5. EXTEND WATER LINES THROUGH VACUUM BREAKERS (FURNISHED BY DIVISION 11) WHERE INLETS ARE SUBJECT TO SUBMERSION - DIVISION 15.
6. FURNISH WATER INLET VALVES, TEMPERATURE GAUGES, PRESSURE REDUCING VALVES (FOR LOWER PRESSURES THAN INDICATED ON DRAWINGS), MIXING VALVES, AND ACCESSORIES REQUIRED FOR OPERATION OF EQUIPMENT - DIVISION 11.
7. FURNISH AND INSTALL MIXING FAUCET WITH VACUUM BREAKER AND HOSE THREADS - DIVISION 15.
8. SLOPE CONDENSATE DRAIN LINES GENEROUSLY (1/2" PER LINEAL FOOT MINIMUM) FROM WALK-IN COOLER AND FREEZER COILS TO 6" ABOVE WALK-IN FLOOR AND EXTEND THROUGH WALK-IN PANELS AND BUILDING WALLS (WHERE APPLICABLE) TO FLOOR DRAIN - DIVISION 11. DRAIN LINE TRAP AND 2" AIR-GAP REQUIRED.
9. WALK-IN PANEL PENETRATIONS FOR REFRIGERANT PIPING AND DRAIN LINES SHALL BE SEALED WITH FOAM URETHANE.
10. FURNISH SINK FAUCETS, TAIL PIECES, LEVER HANDLE DRAINS AND VACUUM BREAKERS - DIVISION 11.
11. FURNISH AND INSTALL 2" DRAIN LINE EXTENSIONS FROM SINK REQUIRING OPEN SITE DRAINS TO BUILDING FLOOR SINK - DIVISION 15. 2" AIR-GAP REQUIRED.
12. FURNISH AND INSTALL 2" HIGH-TEMP RATED (200+°F) DRAIN LINES FROM EACH OF TWO (2) CONVECTION STEAMERS TO FLOOR SINK - DIVISION 15. 2" AIR-GAP REQUIRED.
13. FURNISH AND INSTALL 2" HIGH-TEMP RATED (200°+F) DRAIN LINE FROM ONE (1) CONVECTION STEAMER (LOCATED ADJACENT TO ITEM NO. 30) TO FLOOR SINK - DIVISION 15. 2" AIR-GAP REQUIRED.
14. TEST INTERNAL WATER PIPING OF UDS (FURNISHED BY DIVISION 11) FOR LEAKS CAUSED BY SHIPPING AND TIGHTEN AS REQUIRED - DIVISION 15.
15. UTILITY DISTRIBUTION SYSTEM SPECIFIED INCLUDES INTEGRALLY CONNECTED WATER FILTER SYSTEM LOCATED WITH END TOWER ADJACENT TO ITEM NO. 30 FOR FILTERED WATER CONNECTIONS OF ITEM NO. 29.
16. CONNECT WATER QUICK-DISCONNECT HOSE ASSEMBLIES (FURNISHED BY DIVISION 11) TO COOKING EQUIPMENT WHERE REQUIRED - DIVISION 15.
17. FURNISH AND INSTALL MECHANICAL GAS SHUT-OFF VALVE FOR FIRE SUPPRESSION SYSTEM ON INCOMING GAS LINE TO UDS PRIOR TO TEE FITTING FOR LOOPED SERVICE - DIVISION 15. REFER TO DIAGRAM D_, FS4.01.
18. CONNECT GAS QUICK-DISCONNECT HOSE ASSEMBLIES (FURNISHED BY DIVISION 11) TO COOKING EQUIPMENT WHERE REQUIRED - DIVISION 15.
19. INSTALL STAINLESS STEEL FLOOR DRAIN TROUGH (FURNISHED BY DIVISION 11) WITH TOP OF PERIMETER FLANGE FLUSH WITH SURROUNDING FINISHED FLOOR - DIVISION 22.
20. WATER LINE SHALL BE PIPED THROUGH WATER FILTER (FURNISHED BY DIVISION 11) TO EQUIPMENT - DIVISION 15.
21. FURNISH AND INSTALL 1/2" DRAIN LINE FROM ICE MACHINE TO FLOOR SINK - DIVISION 15. 2" AIR-GAP REQUIRED.

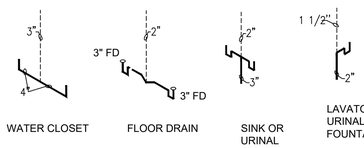

TYPICAL PLUMBING FIXTURE RISERS

NO SCALE

NOTES:
1. ALL WORK SHALL CONFORM TO THE 2015 MICHIGAN PLUMBING CODE.
2. PROVIDE TRAP PRIMERS ON ALL FLOOR DRAINS.
3. PROVIDE ACCESS PANELS IN WALLS FOR ALL CLEANOUTS.
4. SIZE WATER PIPING FOR EACH FIXTURE GROUP PER TABLE BELOW.
5. PROVIDE BALL VALVES AT ALL FIXTURE GROUPS TO ISOLATE WATER SUPPLIES.
6. PROVIDE AIR CHAMBERS ON HW & CW AT EACH FIXTURE GROUP.
7. SIZE SEWER AND VENT PIPING PER PLUMBING FIXTURES TABLES.
8. MINIMUM VENT THRU ROOF SHALL BE 3".
9. PROVIDE ¾" CW TO EACH ICE MACHINE, COFFEE MACHINE AND DRINK MACHINE WITH WALL BOX AND SHUTOFF VALVE.
10. MINIMUM WATER PIPING SIZE TO SAFETY SHOWER IS 1¼".
11. MINIMUM WATER PIPING SIZE SHALL BE ¾".
12. MINIMUM SEWER FOR WATER CLOSET OR TOILET ROOM FIXTURE GROUP SHALL BE 4".
13. MINIMUM VENT FOR WATER CLOSET OR TOILET ROOM FIXTURE GROUP SHALL BE 3".

WATER PIPE SIZING TABLE:

WATER CLOSETS

#	PIPE SIZE
1	1"
2	1¼"
3-4	1½"
5-10	2"
11-15	2½"

LAVATORIES, SINKS OR SHOWERS

#	PIPE SIZE
1-4	¾"
5-8	1"
9-12	1¼"

DRINKING FOUNTAINS

#	PIPE SIZE
1-4	¾"

URINALS

#	PIPE SIZE
1	¾"
2	1"
3-4	1¼"

SPECIFICATIONS:

SECTION 15A: PLUMBING

GENERAL PROVISIONS

1. SCOPE: PROVIDE ALL LABOR, MATERIAL, AND EQUIPMENT IN ACCORDANCE WITH THESE SPECIFICATIONS AND THE ACCOMPANYING DRAWINGS TO PROVIDE A COMPLETE AND PROPERLY OPERATING PLUMBING SYSTEM FOR THE BUILDING.

   OBTAIN WATER, SEWER, GAS TAPS, AND ANY OTHER REQUIRED UTILITIES AND EXTEND SERVICE FROM SAME TO BUILDING AS SHOWN ON DRAWINGS. VISIT THE SITE FOR UNDERSTANDING OF THE WORK TO BE DONE BEFORE SUBMITTING BID. REFER TO CIVIL DWGS FOR SITE UTILITIES.

   COORDINATE THIS WORK WITH THE WORK OF THE OTHER TRADES ON THE PROJECT. ALL PLUMBING IS TO BE ROUGHED IN WHILE THE BUILDING IS BEING CONSTRUCTED AT SUCH TIMES AS NOT TO DELAY THE GENERAL CONTRACTOR ON THE BUILDING.

2. GENERAL REQUIREMENTS: COMPLY WITH ALL FEDERAL, STATE, AND LOCAL REQUIREMENTS, CODES, RULES, AND ORDINANCES GOVERNING WORK ON THIS CHARACTER. PAY FOR AND OBTAIN NECESSARY CONSTRUCTION PERMITS AND CERTIFICATES OF INSPECTION.

   A. DRAWINGS: THE LOCATION OF THE PIPING RUNS ARE APPROXIMATE AND THE CONTRACTOR MUST MAKE ANY NECESSARY CHANGES IN THE PIPING RUNS, ETC., AND AT NO ADDITIONAL COST TO THE OWNER. OUTLET LOCATIONS ARE CRITICAL AND MUST BE LOCATED EXACTLY ACCORDING TO THE PLUMBING PLAN. COORDINATE THIS WORK WITH THE INSTALLERS OF EQUIPMENT FURNISHED AND INSTALLED BY OTHERS. REFER TO THE OTHER DRAWINGS FOR DETAILS OF THE BUILDING CONSTRUCTION AND THE OTHER MECHANICAL, ELECTRICAL, AND EQUIPMENT FEATURES.

   B. COORDINATION AND WORKMANSHIP: SCHEDULE THIS WORK SO THAT IT WILL BE PROPERLY COORDINATED WITH ALL OTHER TRADES. WORKMANSHIP SHALL BE IN ACCORDANCE WITH THE BEST PRACTICE FOR THE CLASS OF WORK INVOLVED. WORKMANSHIP SHALL ALLOW THE APPLIANCE TO OPERATE AS INTENDED AND BE INSTALLED TO BEST PROTECT THE PUBLIC AND OPERATORS FROM INJURY OR DAMAGE, AND TO PRESENT A NEAT, PLEASING, AND ORDERLY APPEARANCE.

   1 C. PROVIDE BACKFLOW PROTECTION ON ALL FIXTURES AS REQUIRED BY MPC 608. PROVIDE AIR GAPS AT BEVERAGE MACHINES, ICE MACHINES AND COFFEE/TEA DISPENSERS PER MPC CHAPTER 8.

MATERIALS AND PERFORMANCE

1. MATERIALS: ALL MATERIALS SHALL BE NEW AND OF THE QUALITY INDICATED BY THE SPECIFIED BRAND NAMES. SUBSTITUTIONS OF MATERIAL OF EQUAL QUALITY BY OTHER FIRST-LINE MANUFACTURERS MAY BE ACCEPTABLE PROVIDED A LIST OF SUCH SUBSTITUTIONS IS APPROVED IN WRITING POPEYES DEVELOPMENT. A SUBSTITUTIONS LIST SHALL BE SUBMITTED IN TRIPLICATE WITHIN FIVE (5) DAYS AFTER THE CONTRACT IS LET.

2. BACKFILLING: PERFORM ALL NECESSARY EXCAVATING AND BACKFILLING REQUIRED FOR THIS INSTALLATION. PREPARE A PROPER BED OF SAND OR GRAVEL OR EQUIVALENT IN ROCK SCREENINGS SO AS TO ELIMINATE SHIMMING AND VOID SPACE UNDER ANY OF THE UTILITY SERVICE PIPES. BENDING OF ANY HARD PIPE WILL NOT BE PERMITTED. WHERE A CHANGE IN DIRECTION IS NECESSARY ON PRESSURE PIPES, "COMPATIBLE" COUPLINGS OR EQUAL SHALL BE USED AND BENDS MAY NOT EXCEED 90 DEGREES. ALL EXCAVATION BELOW THE BOTTOM OF FOOTINGS SHALL BE BACKFILLED ACCORDING TO STRUCTURAL ENGINEER'S RECOMMENDATION TO A FINAL LEVEL EQUAL TO ITS ORIGINAL CONDITION. IN THE EVENT THE BACKFILL SHOULD SETTLE BEFORE THE FINAL TOP SURFACE IS APPLIED, APPLY ADDITIONAL BACKFILL TO SUSTAIN THE ORIGINAL LEVEL. CARE SHOULD BE TAKEN TO ADDITIONAL BACKFILL TO SUSTAIN THE ORIGINAL LEVEL. CARE SHOULD BE TAKEN TO MINIMIZE THE DUST LEVEL WHEN EXCAVATING AND BACKFILLING SO AS TO COMPLY WITH FEDERAL AND STATE E.P.A. REGULATIONS RELATING TO THIS TYPE OF WORK (FUGITIVE DUST).

3. PIPING INSTALLATION: CLEANOUTS MUST BE INSTALLED ON MINIMUM DROP LINES EVEN THOUGH NOT SHOWN ON THE PLANS. USE REDUCING FITTINGS IN MAKING REDUCTIONS IN SIZE OF PIPE. REAM ALL PIPE AFTER CUTTING, THEN TURN PIPES ON END AND KNOCK OUT ALL LOOSE DIRT AND SCALE BEFORE INSTALLING. MAKE CHANGES IN HORIZONTAL DIRECTION OF SOIL AND WASTE PIPES WITH LONG RADIUS FITTINGS OR WITH COMBINATION "Y" BRANCHES AND 1/8TH BENDS. CONNECT SOIL STACKS AT BASE TO HORIZONTAL RUNS WITH COMBINATION "Y" AND 1/8TH BENDS.

   WATER SUPPLY PIPES TO FIXTURES AND WASTE PIPES FROM FIXTURES SHALL BE CENTERED IN THE PROPER PLACE RELATIVE TO THE CENTER LINE OF THE FIXTURE. NO OFFSETS WILL BE ALLOWED. ALL PIPES SHALL BE RUN MECHANICALLY STRAIGHT AND SQUARE WITH BUILDING LINES, EXCEPT FOR REQUIRED PITCH ON HORIZONTAL LINES, AND ALL CHANGES IN DIRECTION SHALL BE MADE WITH FITTINGS. WATER PIPING TO BE ROUTED IN WALLS, UNDER THE FLOOR SLAB, AND ABOVE SUSPENDED CEILINGS AS NOTED. WHERE WATER LINES ARE ROUTED UNDER THE FLOOR SLAB, NO MECHANICAL JOINTS SHALL BE MADE UNDER THE SLAB EXCEPT AS LISTED BELOW. WATER PIPING SHALL BE INSTALLED NOT TO EXERT VERTICAL NOR HORIZONTAL STRESSES ON THE SEATING OF UNIONS, UNIONS SHALL BE COPPER TYPE NIBCO #733 OR EQUAL.

   NO WAX, PUTTY, OR VARNISH WILL BE PERMITTED. CRACKED FITTINGS SHALL BE REMOVED AND REPLACED WITH NEW FITTINGS. MAKE THREADED JOINTS IN BRASS PIPE AND FITTING WITH PIPE THREADING TO THE SHOULDER OF THE FITTINGS. NO SLIP JOINTS OR COUPLING JOINTS IN BRASS PIPE WILL BE PERMITTED, EXCEPT ON THE FIXTURE SIDE OF THE TRAP.

4. NATURAL GAS PIPING: FOR ABOVEGROUND INSTALLATIONS, ALL FITTINGS TO BE JOINED WITH TEFLON TAPE SEAL OR OTHER SUITABLE SEAL AND MADE IN CONFORMANCE WITH THE BEST PRACTICES OF AGA AND NFPA 54. UNIONS SHALL BE CAST BLACK IRON AND INSTALLED IN A MANNER SUCH THAT NO STRESS WILL BE PLACED ON THE MALE-FEMALE SEALING SURFACES. PROPER ALIGNMENT WILL BE MADE AT TIME OF INSTALLATION. ALL JOINTS AND CONNECTIONS SHALL BE THOROUGHLY CLEANED OF OIL, THREAD CUTTINGS AND RESIDUALS TO ACCEPT ENAMEL PAINT. ROUGH OR SHARP EXPOSED THREAD SURFACES SHALL BE FILED SMOOTH. TESTING SHALL BE AS OUTLINED UNDER SECTION 15A, PARAGRAPH II, TESTS.

   A. MATERIALS: BLACK CARBON STEEL, SCH. 40 WITH MALLEABLE IRON THREADED FITTINGS.

   B. PAINTING: PAINT ALL GAS PIPING EXPOSED TO WEATHER WITH ONE COAT OF PRIMER, AND TWO COATS OF RUST-PROOF PAINT. COLOR SHALL MATCH BUILDING COLORS. COORDINATE WITH G.C.

5. WATER PIPE:

   WATER METER & BACKFLOW REQUIREMENTS SHALL BE IN ACCORDANCE W/ LOCAL CODES & UTILITY COMPANIES. REFER TO CIVIL DRAWINGS FOR METER, SERVICE LINES, AND CONTAINMENT BACKFLOW PREVENTER.

   JOINTS SHALL BE CLEANED AND DEBURRED AS RECOMMENDED BY THE MANUFACTURER AND FEDERAL, STATE AND LOCAL CODES AND SOLDERED AS LISTED BELOW. FLUX SHALL BE NON-CORROSIVE. ALL PIPE JOINT MATERIALS SHALL BE LEAD-FREE.

   ABOVE GRADE - WHERE FITTINGS ARE SOLDERED BOTH FITTINGS AND TUBING SHALL BE CLEANED AS DESCRIBED ABOVE. UNDER NO CIRCUMSTANCES SHALL DISSIMILAR METALS COME INTO DIRECT CONTACT WITH COPPER TUBING, E.G., GALVANIZED STRAPPING, HANGERS, OR CLAMPS TO SECURE THE TUBING.

   BELOW GRADE, OR FLOOR SLAB ON EARTH OR STONE FILL - HIGH TEMPERATURE, SOLDER, 1200 DEG. F OR GREATER MELTING POINT.

NOTE: WATER PIPE TO BE PROPERLY SECURED AND ALIGNED SO AS NOT TO EXERT VERTICAL OR HORIZONTAL STRESSES ON THE SEATING OF THE MATING (MALE AND FEMALE) SURFACES OF THE UNIONS.

   A. MATERIALS - UNDERGROUND: TYPE "K" COPPER TUBE, SOFT TEMPER

   B. MATERIALS - ABOVEGROUND: TYPE "L" COPPER TUBE, HARD DRAWN

   C. INSULATION: INSULATION FOR HOT AND COLD WATER PIPING SHALL BE 1/2" THICK ARMAFLEX UL LABELED OR 1" FIBERGLASS 25/50 WITH ASJ/SSL FOIL/VINYL JACKET OR EQUAL. INSULATE ALL PIPING AND FITTINGS.

6. WASTE PIPING: INSTALL HORIZONTAL DRAIN AND WASTE PIPES WITH 1/4" FT. SLOPE.

   A. MATERIALS (SANITARY/GREASE WASTE & VENT): PVC SCH. 40, SOLID CORE (ASTM 2665), WITH SCH. 40 DRAINAGE PATTERN PVC FITTINGS AND SOLVENT CEMENTED JOINTS WITH TINTED PRIMER WITH THE EXCEPTION OF HOOD WALL, IN WHICH CASE, CAST IRON IS REQUIRED.

      EXCEPTION: SEE PLAN NOTES AND RISER DIAGRAM FOR U/G GREASE WASTE LINE BETWEEN COOKING LINE FLOOR DRAIN AND GREASE WASTE MAIN. THIS LINE SHALL BE INSTALLED WITH SERVICE WEIGHT, COATED & LINED, CAST IRON SOIL PIPE WITH MECHANICAL HUB & SPIGOT PUSH-ON JOINTS.

   B. MATERIALS (ABOVEGROUND INDIRECT DRAIN AND CONDENSATE DRAIN LINES): TYPE "M" COPPER TUBE, HARD DRAWN, WITH COPPER OR BRASS DRAINAGE PATTERN FITTINGS AND SOLDERED JOINTS.

   C. INSULATION: INSULATE ALL ABOVEGROUND INDIRECT OR CONDENSATE DRAIN LINES COLLECTING COLD CONDENSATE FROM REFRIGERATION OR HVAC EQUIPMENT. INSULATION SHALL BE 1/2" THICK ARMAFLEX, OR EQUAL.

   D. HEAT TRACING: HEAT TRACE ALL CONDENSATE DRAIN LINES INSIDE COOLERS AND FREEZERS AT 5 WATTS/LINEAR FOOT (MINIMUM).

   1 E. ALL FLOOR DRAINS SHALL BE TRAPPED AND PROVIDED WITH TRAP PRIMERS PER MPC 1002.4.

   F. ALL FIXTURES SHALL BE VENTED PER MPC 901.2.1.

   G. PROVIDE 10' OF CAST IRON PIPING ON FLOOR SINK GREASE WASTE SERVICING DISHWASHER PER MPC 702.5.

7. PIPE SLEEVES/ESCUTCHEONS: PROVIDE CHROME-PLATED ESCUTCHEONS ON ALL PIPES PASSING THROUGH WALLS, FLOORS, OR CEILINGS OF FINISHED ROOMS. ESCUTCHEONS TO BE BEATON & CADWELL, #10, 40, 6A OR EQUIVALENT WITH SET-SCREWS. PROVIDE ESCUTCHEONS ON ALL WASTE LINES FROM PLUMBING FIXTURES, WHETHER THROUGH WALLS, FLOORS, AND WHETHER CONCEALED BEHIND COUNTERS OR EXPOSED. PIPE SLEEVES SHALL BE PROVIDED WHEN PIPES PENETRATE FOUNDATION AND SHALL BE 1" LARGER THAN PIPE, SEAL SLEEVE WITH CAULKING.

8. PLUMBING FIXTURES: FURNISH AND INSTALL PLUMBING FIXTURES AS SHOWN ON DRAWINGS WITH ALL ACCESSORIES AND TRIM AS LISTED. ALL FIXTURES SHALL BE PROTECTED THROUGH THE COURSE OF THE CONSTRUCTION. ANY FIXTURE DAMAGED SHALL BE REPLACED WITHOUT ADDITIONAL EXPENSE TO THE OWNER.

9. CONNECTION TO OTHER FIXTURES: CONNECT BUILDING SERVICE PIPING, INCLUDING BUT NOT LIMITED TO WATER, DRAIN, AND GAS PIPES TO FOOD SERVICE EQUIPMENT AS INDICATED IN EQUIPMENT SPECIFICATIONS. PROVIDE BACKFLOW PROTECTION ON ICE MACHINES AND BEVERAGE EQUIPMENT SUPPLY CONNECTIONS.

10. TESTS:

   A. DRAINAGE AND VENT PIPING - DRAINAGE AND VENT PIPING SHALL BE TESTED BEFORE THE PLUMBING FIXTURES ARE INSTALLED BY CAPPING THE OPENINGS AND FILLING THE ENTIRE SYSTEM WITH WATER AND ALLOWING IT TO STAND THUS FILLED NOT LESS THAN ONE (1) HOUR. INSPECT WATER LEVEL TO DETERMINE IF PIPING IS TIGHT.

   B. WATER PIPING - THE WATER SUPPLY PIPING LINES SHALL BE TESTED BEFORE THE PLUMBING FIXTURES ARE CONNECTED BY FILLING THE ENTIRE SYSTEM WITH POTABLE WATER AND APPLYING HYDROSTATIC PRESSURE OF 100 PSI AND ALLOWING TO STAND FOR NOT LESS THAN FOUR (4) HOURS AT THIS PRESSURE TO PROVE PLUMBING INTEGRITY.

   C. GAS PIPING - IN LIEU OF LOCAL REQUIREMENTS, GAS PIPING SHALL BE FILLED WITH COMPRESSED AIR TO 150 PSI AND HELD FOR A PERIOD OF FOUR (4) HOURS. EACH JOINT SHALL BE CHECKED BY LIQUID SOAP OR SPECIAL LIQUID CHEMICAL FOR LEAKS. NOTE: REMOVE ALL GAS VALVES AND PROTECT FROM DAMAGE BEFORE TESTING SYSTEM.

11. DISINFECTION OF POTABLE WATER SYSTEM: UPON COMPLETION OF INSTALLATION DISINFECT THE WATER SYSTEM BY FILLING IT WITH SOLUTION CONTAINING 50 PARTS PER MILLION OF CHLORINE AND ALLOW IT TO STAND FOR NOT LESS THAN SIX (6) HOURS BEFORE FLUSHING THOROUGHLY AND RETURNING TO SERVICE. FURNISH CLEAN WATER SAMPLES TO THE LOCAL AUTHORITY FOR TESTING AFTER THE LINES HAVE BEEN DISINFECTED. THIS PROCEDURE TO BE IN ACCORDANCE WITH STATE PLUMBING CODE.

12. CLEANUP: CLEAN ALL PLUMBING FIXTURES AND EQUIPMENT THOROUGHLY BEFORE FINAL INSPECTION, LEAVING ALL READY FOR USE.

13. EXTENDED WARRANTY: WARRANT IN WRITING ANY EQUIPMENT OR MATERIALS USED IN THE INSTALLATION HAVING AN EXTENDED WARRANTY AS OFFERED BY THE MANUFACTURER. PROVIDE NEW OR REBUILT ASSEMBLIES TO THE SITE FOR ANY SUCH EQUIPMENT OR MATERIALS WHICH FAIL DURING THIS PERIOD, AND INSTALL AT NO ADDITIONAL COST TO THE OWNER.

14. OWNER'S MANUAL: PROVIDE THE OWNER, AT THE COMPLETION OF THIS CONTRACT, WITH AN "OWNER'S MANUAL" SO LABELED. A SECOND LIKE MANUAL SHALL BE PREPARED AND FORWARDED TO THE OWNER FOR "JOB RECORDS". THE MANUAL SHALL CONSIST OF A THREE-RING LOOSE-LEAF BINDER CONTAINING ALL PRINTED MATTER SUCH AS: GUARANTEE CARDS, CLEANING INSTRUCTIONS, NOTICES TO OWNER, OPERATING MANUALS, AND MAINTENANCE INSTRUCTIONS THAT MAY BE CONTAINED IN THE SHIPPING CARTONS OR HOUSING OF EQUIPMENT AND ARCHITECTURAL SPECIALTIES.

1 / P3.0 PLUMBING SCHEDULES AND DETAILS

NO SCALE

iARCHITECTURE

SMOKEY BONES
UTICA, MI

CRUMB ENGINEERING
4609 Fairfield Street
P-504.455.4450
Metairie, La 70006
crumbengineering.com

COPYRIGHT
THESE DOCUMENTS ARE PROTECTED BY UNITED STATES COPYRIGHT LAW. THEY HAVE BEEN PREPARED SPECIFICALLY FOR THE PROJECT IDENTIFIED AND ARE NOT SUITABLE FOR USE ON ANY OTHER PROJECT OR AT ANY OTHER LOCATION WITHOUT THE EXPRESS WRITTEN APPROVAL AND PARTICIPATION OF ARCHITECTURE. REPRODUCTION OF THESE DOCUMENTS MUST BE AUTHORIZED BY THE ARCHITECT. ALL RIGHTS ARE RESERVED TO ARCHITECTURE.

STATE OF MICHIGAN
JASON T. CRUMB
License No. 6201070180
LICENSED PROFESSIONAL ENGINEER

REVISIONS	
NO.	DATE
1	1-4-22

PROJECT NO: IA 2119

SHEET P3.0

DATE 11/10/2021

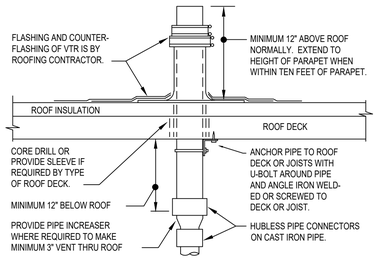

REFER TO PLANS FOR VTR PIPE SIZES AND LOCATIONS. LOCATE VTR MINIMUM THREE FEET FROM PROPERTY LINE, OR TEN FEET HORIZONTAL OR THREE FEET VERTICAL ABOVE ANY BUILDING OPENING OR FRESH AIR INTAKE, OR ONE FOOT FROM ANY VERTICAL SURFACE. LOCATE VTR MINIMUM" FROM PARAPET, EXPANSION JOINT, EQUIPMENT CURB, ETC. OFFSET IN CEILING SPACE WHERE REQUIRED TO MEET THESE CONDITIONS.

2 / P3.1 VENT THRU ROOF (VTR)
N.T.S.

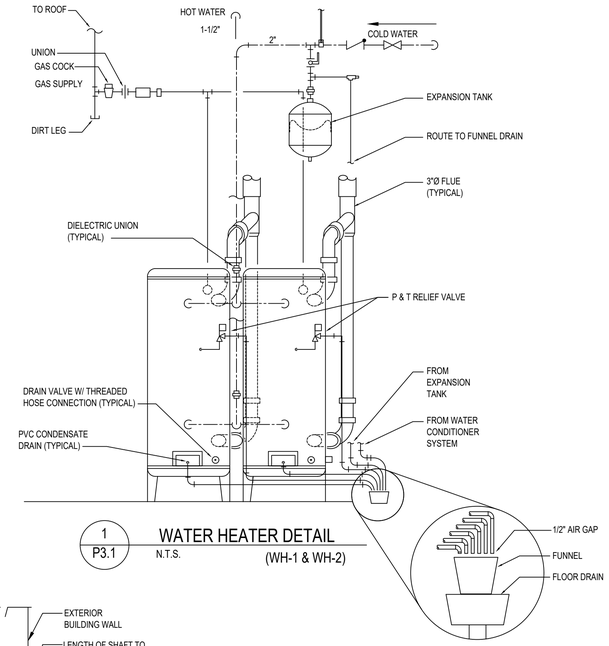

1 / P3.1 WATER HEATER DETAIL
N.T.S. (WH-1 & WH-2)

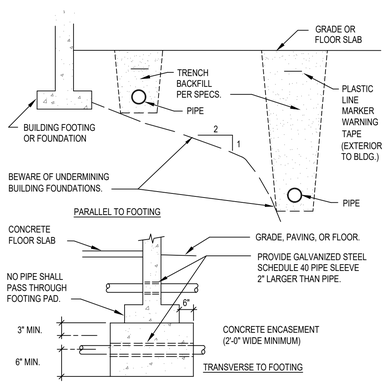

VERIFY EXCAVATION CONDITIONS (SOIL/ROCK) WITH GEOTECHNICAL REPORT AND/OR SITE INVESTIGATION. REFER TO SPECS FOR OTHER CONDITIONS.

5 / P3.1 PIPE AND TRENCH LOCATION
N.T.S.

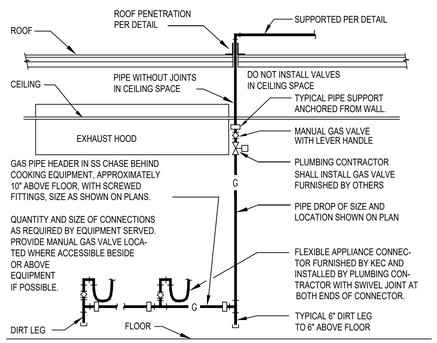

PROVIDE ANY GAS APPLIANCE PRESSURE REGULATORS REQUIRED, INSTALL ANY FURNISHED BY KITCHEN EQUIPMENT CONTRACTOR. VERIFY ROUGH-IN REQUIREMENTS WITH KITCHEN EQUIPMENT CONTRACTOR. COORDINATE WITH ELECTRICAL CONTRACTOR. ARRANGEMENT SHOWN IS SCHEMATIC. ADJUST TO SUIT ACTUAL CONDITIONS. MAKE FINAL CONNECTION TO EQUIPMENT AS RECOMMENDED BY MANUFACTURER. PROVIDE WELDED FITTINGS AND JOINTS IN ANY CONCEALED UNVENTILATED LOCATION.

6 / P3.1 COOKING APPLIANCE GAS PIPE
N.T.S.

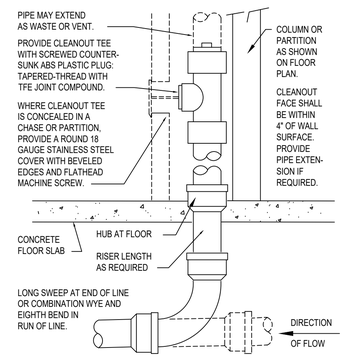

PROVIDE WCO WHERE SHOWN ON PLAN, AND ON SANITARY WASTE BRANCHES NOT SERVED WITH A FLOOR CLEANOUT: LOCATE ABOVE FIXTURE FLOOD RIM WITHIN 4' OF FLOOR. CONSULT LOCAL CODES FOR OTHER WCO REQUIREMENTS.

7 / P3.1 WALL CLEANOUT
N.T.S.

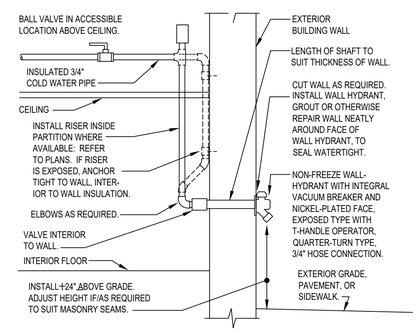

8 / P3.1 NON-FREEZE WALL HYDRANT
N.T.S.

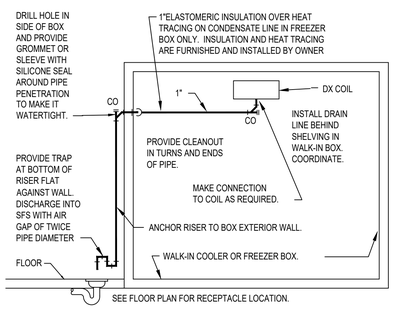

INSTALL PIPE HIGH AS POSSIBLE, ANCHORED TO WALL OF BOX WITH SUPPORTS AT MAXIMUM SIX FOOT CENTERS. USE TYPE "M" HARD COPPER TUBE AND FITTINGS WITH LEAD-FREE SOLDER JOINTS. SLOPE HORIZONTAL PIPE AT MINIMUM TWO PERCENT. PROVIDE CHROMATONE PAINT ON PIPE EXTERIOR TO BOX. REFER TO "INDIRECT DRAIN" DETAIL FOR OTHER REQUIREMENTS.

10 / P3.1 WALK-IN BOX CONDENSATE DRAIN
N.T.S.

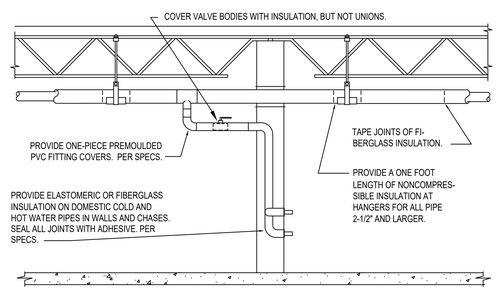

11 / P3.1 PIPE INSULATION
N.T.S.

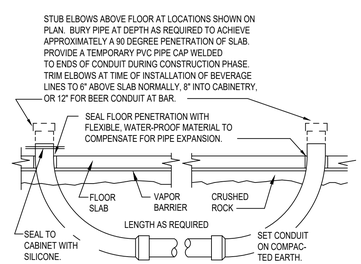

USE SIX INCH SCHEDULE 40 PVC ELECTRICAL CONDUIT AND FITTINGS WITH SOLVENT-WELDED JOINTS. USE MINIMUM QUANTITY OF FITTINGS REQUIRED. PROVIDE LONG SWEEP ELBOWS AT BOTH ENDS, WITH MINIMUM 24 INCH RADIUS (AVAILABLE AS ELECTRICAL CONDUIT - DO NOT USE MUL-TIPLE ELBOWS TO MAKE 90° TURNS). PROVIDE TEST OF CONDUIT AFTER ASSEMBLY TO VERIFY WATERTIGHTNESS. REPAIR LEAKS BEFORE BACKFILLING TRENCH WITH SAND. MAINTAIN PRESSURE UNTIL BEVERAGE LINES ARE INSTALLED. AVOID ELBOWS IN HORIZONTAL RUN IF AT ALL POSSIBLE. BEVERAGE SUPPLIER WILL SEAL ENDS OF CONDUIT WITH FOAM AFTER BEVERAGE LINES ARE INSTALLED IN CONDUIT.

12 / P3.1 PVC BEVERAGE CONDUIT
N.T.S.

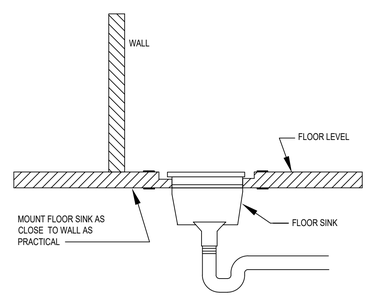

13 / P3.1 FLOOR SINK DETAIL
N.T.S.

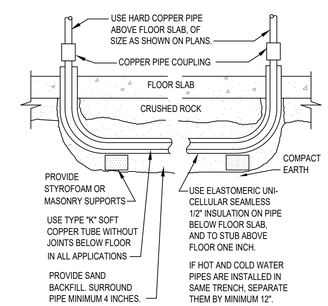

14 / P3.1 WATER PIPE UNDER SLAB
N.T.S.

- / P3.1 PLUMBING SCHEDULES AND DETAILS
NO SCALE

IA ARCHITECTURE

SMOKEY BONES
UTICA, MI

CRUMB ENGINEERING
4609 Fairfield Street
P-504.455.4450
Metairie, La 70006
crumbengineering.com

COPYRIGHT
THESE DOCUMENTS ARE PROTECTED BY UNITED STATES COPYRIGHT LAW. THEY HAVE BEEN PREPARED SPECIFICALLY FOR THE PROJECT IDENTIFIED AND ARE NOT SUITABLE FOR USE ON ANY OTHER PROJECT OR AT ANY OTHER LOCATION WITHOUT THE EXPRESS WRITTEN APPROVAL AND PARTICIPATION OF IARCHITECTURE. REPRODUCTION OF THESE DOCUMENTS MUST BE AUTHORIZED BY THE ARCHITECT. ALL RIGHTS ARE RESERVED TO IARCHITECTURE.

STATE OF MICHIGAN
JASON T. CRUMB
License No. 6201070180
LICENSED PROFESSIONAL ENGINEER

REVISIONS	
NO.	DATE

PROJECT NO: IA 2119
SHEET P3.1

DATE 11/10/2021

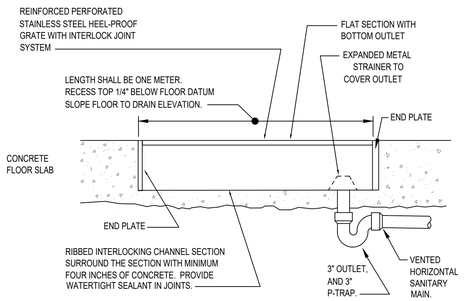

1 P3.2 INTERIOR TRENCH DRAIN

N.T.S.

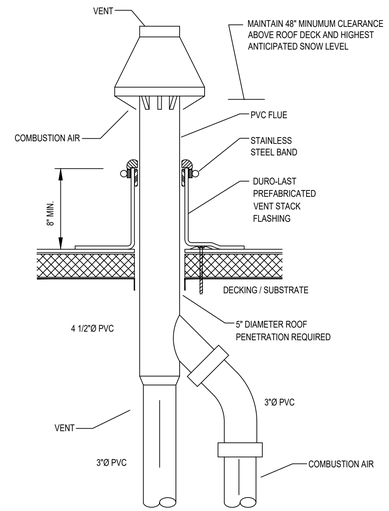

2 P3.2 WATER HEATER CONCENTRIC FLUE VENT DETAIL

N.T.S.

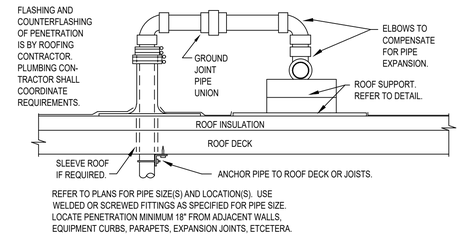

REFER TO PLANS FOR PIPE SIZE(S) AND LOCATION(S). USE WELDED OR SCREWED FITTINGS AS SPECIFIED FOR PIPE SIZE. LOCATE PENETRATION MINIMUM 18" FROM ADJACENT WALLS, EQUIPMENT CURBS, PARAPETS, EXPANSION JOINTS, ETCETERA.

3 P3.2 GAS PIPE ROOF PENETRATION

N.T.S.

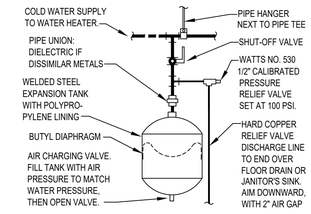

UNIT SHALL BE FDA APPROVED FOR DOMESTIC WATER USE. PIPING ARRANGEMENT SHOWN IS SCHEMATIC. ADJUST TO SUIT FIELD CONDITIONS. MAKE PIPE SAME SIZE AS TANK FITTING. FOLLOW MANUFACTURER'S INSTRUCTIONS FOR INSTALLATION PROCEDURE. VERIFY PROPER OPERATION WHEN INSTALLED.

4 P3.2 EXPANSION TANK

N.T.S.

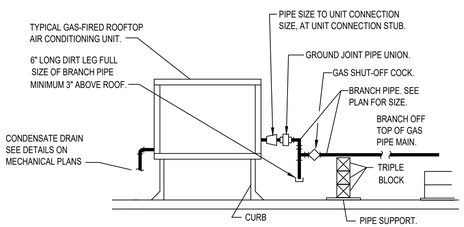

PIPING ARRANGEMENT SHOWN IS SCHEMATIC. ADJUST AS REQUIRED TO SUIT ACTUAL CONDITIONS. CONDENSATE TRAP SHALL BE ROUTED TO AVOID INTERFERENCE WITH RTU MAINTENANCE ACCESS DOORS.

6 P3.2 GAS CONNECTION TO ROOFTOP UNITS

N.T.S.

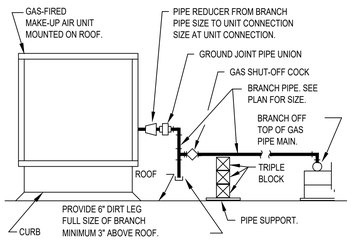

7 P3.2 GAS CONNECTION TO MAKE-UP AIR UNIT

N.T.S.

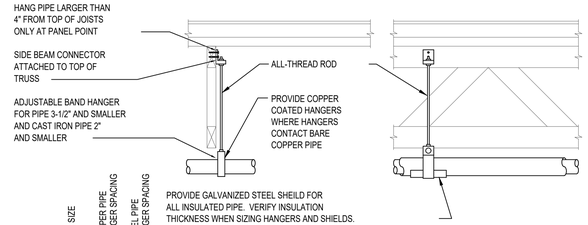

PIPE SIZE	COPPER PIPE HANGER SPACING	STEEL PIPE HANGER SPACING
1/2"	6'	6'
3/4"	6'	6'
1"	6'	8'
1-1/4"	6'	10'
1-1/2"	6'	10'
2"	10'	10'
2-1/2"	10'	10'
3"	10'	10'
4"	10'	10'

PROVIDE GALVANIZED STEEL SHEILD FOR ALL INSULATED PIPE. VERIFY INSULATION THICKNESS WHEN SIZING HANGERS AND SHIELDS.

PROVIDE UPPER ATTACHMENT AS REQUIRED FOR CASES NOT SHOWN HERE. DO NOT INSTALL HANGER INSIDE INSULATION OR OTHERWISE PENETRATE VAPOR BARRIER. DO NOT HANG ONE PIPE FROM ANOTHER EXCEPT IN CHASES. SLOPE ALL WATER PIPING SLIGHTLY TOWARD DRAINABLE LOCATIONS. HANGER SPACING FOR PIPE SIZES: AS INDICATED IN TABLE. CAST IRON: 10' AND WITHIN 1'-0" OF ALL JOINTS. ROD SIZES FOR PIPE SIZE: 2" AND SMALLER=3/8", 2 1/2" TO 3"=1/2", 4"=5/8". LOCATE HANGERS WITHIN 1'-0" OF VALVES AND FITTINGS. PROVIDE SUPPLEMENTAL STEEL STRUTS BETWEEN JOISTS IF REQUIRED. LOCATE HANGERS WITHIN 1'-0" OF EQUIPMENT CONNECTIONS. ANCHOR WATER PIPE AGAINST SWAYING DUE TO CHANGES IN WATER VELOCITY. CHAINS AND PERFORATED STRAP IRON AND STEEL ARE NOT ACCEPTABLE. DO NOT SUSPEND PIPE FROM JOIST BRACING MEMBERS. REFER TO CODES AND SPECIFICATIONS FOR FURTHER INFORMATION. PROVIDE SEISMIC BRACING IF/AS REQUIRED BY LOCAL AUTHORITIES.

8 P3.2 PIPE HANGERS

N.T.S.

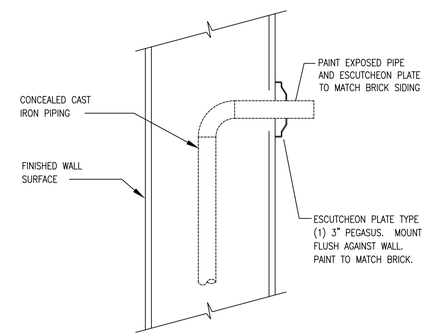

13 P3.2 PIPE THRU EXTERIOR WALL

N.T.S.

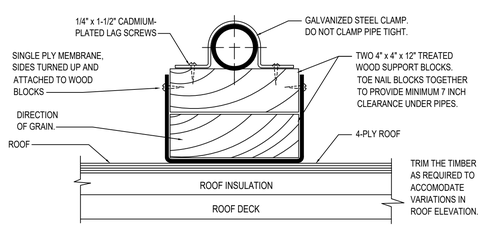

LOCATE AT 4' SPACING FOR PLASTIC PIPE, AND AT FOLLOWING SPACING FOR METAL PIPE: 4"=14' 3"=12' 2-1/2"=11' 2"=10' 1-1/2"=9' 1-1/4"=8' 1"=7' 3/4"=6'. PLACE A SUPPORT AS CLOSE AS POSSIBLE TO EACH ELBOW AND TEE. SET BLOCKS FREE ON BASE SHEETS. STACK BLOCKS AND NAIL THEM TOGETHER WHERE REQUIRED TO ELEVATE PIPING. INSTALL PIPE TO ALLOW FOR EXPANSION AND CONTRACTION.

9 P3.2 SUPPORT OF PIPE ON ROOF

N.T.S.

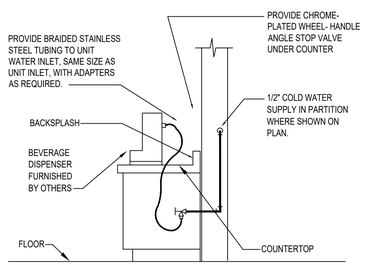

ARRANGEMENT SHOWN IS SCHEMATIC. ADJUST AS REQUIRED TO SUIT CONDITIONS. VERIFY CONNECTIONS WITH MANUFACTURER.

10 P3.2 BEVERAGE DISPENSER WATER

N.T.S.

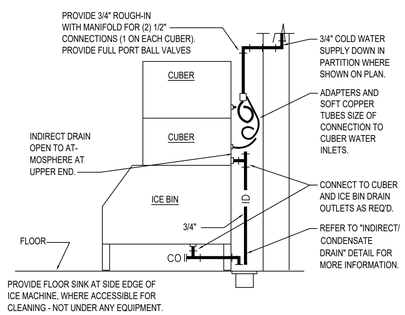

PROVIDE FLOOR SINK AT SIDE EDGE OF ICE MACHINE, WHERE ACCESSIBLE FOR CLEANING - NOT UNDER ANY EQUIPMENT.

PROVIDE COLD WATER ROUGH-IN AT TOP OF ICE MACHINE. ARRANGEMENT SHOWN IS SCHEMATIC. ADJUST AS REQUIRED TO SUIT CONDITIONS. VERIFY CONNECTIONS WITH MANUFACTURER.

11 P3.2 ICE MACHINE CONNECTIONS

N.T.S.

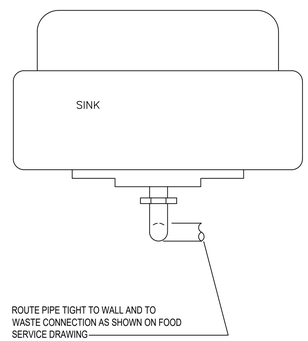

ROUTE PIPE TIGHT TO WALL AND TO WASTE CONNECTION AS SHOWN ON FOOD SERVICE DRAWING

12 P3.2 KITCHEN SINK WASTE AND SUPPLY DETAIL

N.T.S.

- P3.1 PLUMBING SCHEDULES AND DETAILS

NO SCALE

IA ARCHITECTURE

SMOKEY BONES
UTICA, MI

CRUMB ENGINEERING

4609 Fairfield Street
P-504.455.4450

Metairie, La 70006
crumbengineering.com

COPYRIGHT
THESE DOCUMENTS ARE PROTECTED BY UNITED STATES COPYRIGHT LAW. THEY HAVE BEEN PREPARED SPECIFICALLY FOR THE PROJECT IDENTIFIED AND ARE NOT SUITABLE FOR USE ON ANY OTHER PROJECT OR AT ANY OTHER LOCATION WITHOUT THE EXPRESS WRITTEN APPROVAL AND PARTICIPATION OF ARCHITECTURE. REPRODUCTION OF THESE DOCUMENTS MUST BE AUTHORIZED BY THE ARCHITECT. ALL RIGHTS ARE RESERVED TO IARCHITECTURE.

STATE OF MICHIGAN
JASON T. CRUMB
License No. 6201070180
LICENSED PROFESSIONAL ENGINEER

REVISIONS	
NO.	DATE

PROJECT NO: IA 2119

SHEET P3.2

DATE 11/10/2021