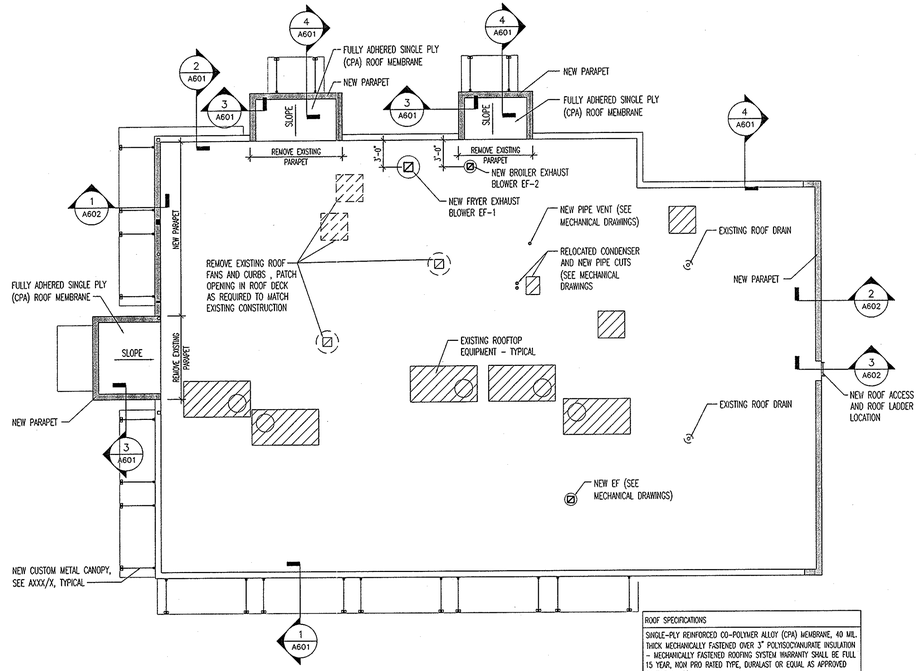

ROOF SPECIFICATIONS

SINGLE-PLY REINFORCED CO-POLYMER ALLOY (CPA) MEMBRANE, 40 MIL. THICK MECHANICALLY FASTENED OVER 3" POLYISOCYANURATE INSULATION - MECHANICALLY FASTENED ROOFING SYSTEM WARRANTY SHALL BE FULL 15 YEAR, NON PRO RATED TYPE, DURALAST OR EQUAL AS APPROVED BY THE OWNER.

NOTE:
1. REMOVE EXISTING ROOFING AND INSULATION TO DECK. REPAIR DECKING AS REQUIRED AT EQUIPMENT REMOVAL OR NEW INSTALLATIONS PRIOR TO INSTALLING NEW INSULATION AND SINGLE PLY MEMBRANE THRU-OUT.
2. MAINTAIN EXISTING SLOPES AS REQUIRED TO ROOF DRAINS, CRICKET FOR POSITIVE SLOPE.
3. REFER TO MECHANICAL DRAWINGS FOR ROOF EQUIPMENT, RELOCATIONS AND NEW OPENINGS.

1 A301 ROOF PLAN
SCALE: 1/8"=1'-0"

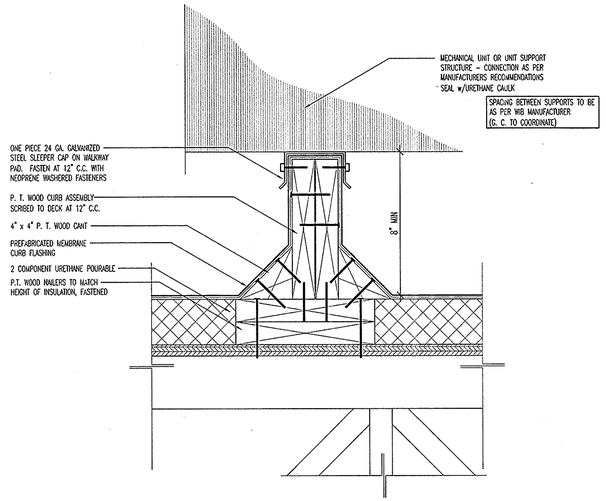

2 A301 COMPRESSOR MOUNTING DETAIL
SCALE: 3"=1'-0"

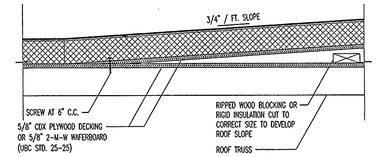

3 A301 TYPICAL CRICKET DETAIL
SCALE: 1"=1'-0"

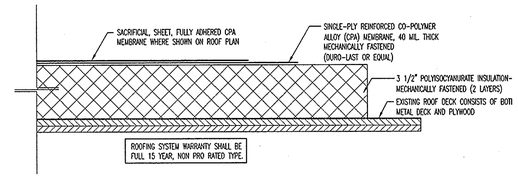

4 A301 STANDARD ROOFING SECTION
SCALE: 3"=1'-0"

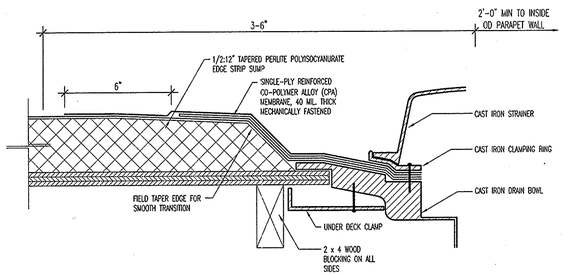

5 A301 ROOF DRAIN DETAIL
SCALE: 3"=1'-0"

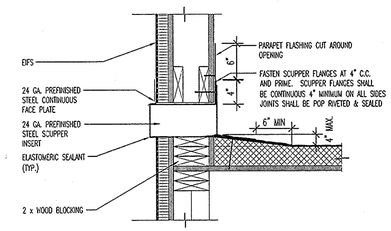

6 A301 PARAPET SCUPPER DETAIL
SCALE: 1"=1'-0"

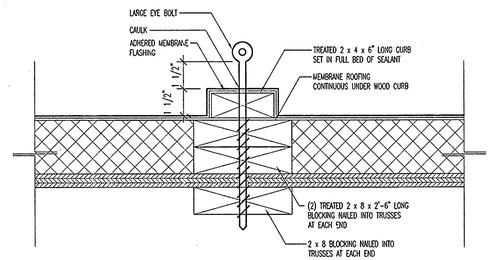

7 A301 SECTION AT EYEBOLT ANCHOR
SCALE: 3"=1'-0"

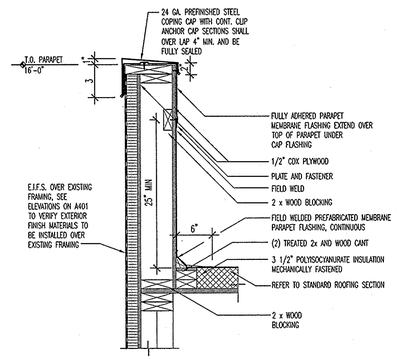

8 A301 STANDARD BASE FLASHING CONFIGURATION
SCALE: 1"=1'-0"

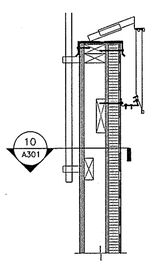

9 A301 SECTION AT FLAGPOLE
SCALE: 1"=1'-0"
(NOTE: SEE DETAIL 3/A3 FOR PARAPET CONSTRUCTION)

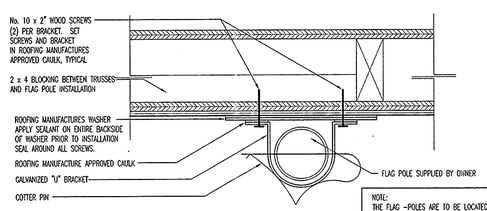

NOTE:
THE FLAG -POLES ARE TO BE LOCATED ALONG THE INSIDE OF THE PARAPET AT 6'-0" C.C. ON THE SIDES OF THE BUILDING FACING STREETS. THE FLAG POLE BRACKETS ARE SUPPLIED BY THE OWNER AND INSTALLED BY THE CONTRACTOR.

10 A301 FLAG POLE PLAN VIEW
SCALE: 3"=1'-0"

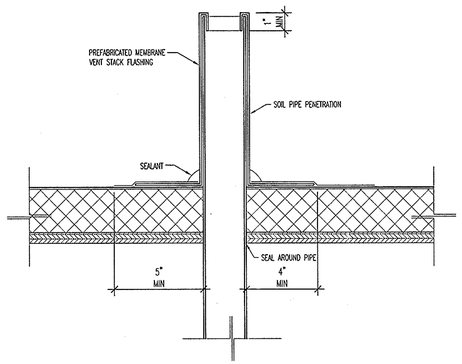

11 A301 SOIL PIPE FLASHING
SCALE: 3"=1'-0"

REV.	DESCRIPTION	BY	DATE

WIGHTMAN PETRIE
SURVEYING ENGINEERING ENVIRONMENTAL LANDSCAPE ARCHITECTURE
412 South Lafayette Blvd South Bend, IN 46601 p: 574.232.4388 f: 574.232.4333

Burger King Restaurant
Kentwood, Michigan

BRAVOKILO, INC.
4220 Edison Lakes Parkway
Mishawaka, Indiana

ROOF PLAN & DETAILS

DESIGNED BY: STEVE LACLUYSE
REVIEWED BY:
DRAWN BY: MATT SCHUSTER
DATE: MAY 2, 2011
JOB NUMBER: 2010-5068
SCALE: AS SHOWN

X-1710-A301

H:\2010 Projects\2010-5068\Kent\X-1710\X-1710-A301 RF Plan.dwg, 12/5/2011 11:38:15 AM