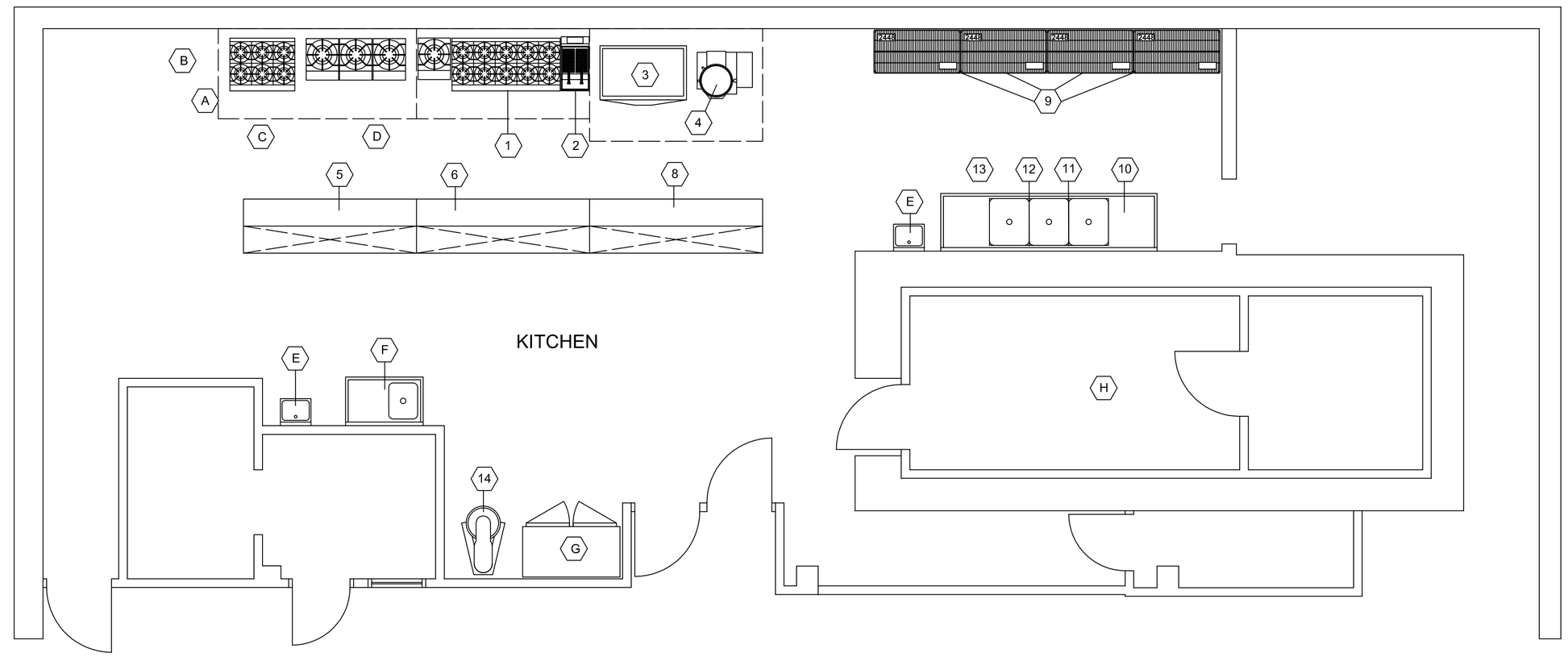


FOODSERVICE EQUIPMENT LAYOUT

SCALE: 1/4" = 1'-0"

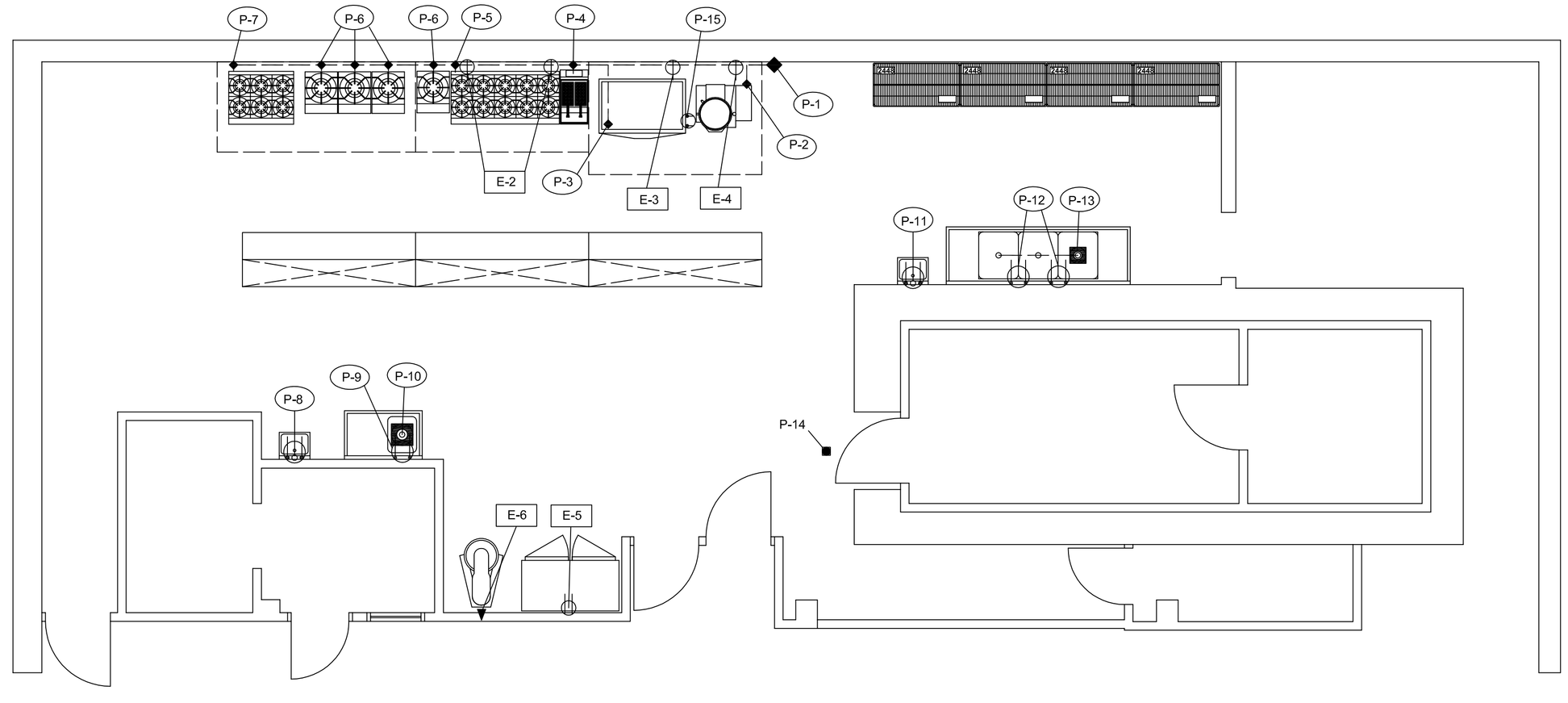


FOODSERVICE EQUIPMENT - PLUMBING & ELECTRICAL ROUGH-IN LAYOUT

SCALE: 1/4" = 1'-0"

## SYMBOLS

| | |
|---|---|
| H.W. | HOT WATER |
| C.W. | COLD WATER |
| W. | WASTE |
| | FLOOR DRAIN |
| | INDIRECT SAFE WASTE |
| | FUNNEL TYPE SAFE WASTE |
| | GAS |
| B.T.U. | BRITISH THERMAL UNIT |
| | ELECTRICAL CONDUIT CONNECTION |
| | SINGLE USAGE PLUG-IN RECEPTACLE |
| | DUPLEX PLUG-IN RECEPTACLE |
| 3 | TRIPLE PLUG-IN RECEPTACLE |
| 4 | QUAD PLUG-IN RECEPTACLE |
| | SPECIAL PURPOSE OUTLET (LOW VOLTAGE) |
| K.W. | KILOWATT |
| H.P. | HORSE POWER |
| AMPS. | AMPHERS |
| V. | VOLTS |
| A.F.F | ABOVE FINISHED FLOOR |
| M.U.A. | MAKE-UP AIR |
| B.T. | BRANCH TO |
| S. | SWITCH |

## EQUIPMENT SCHEDULE - NEW

1. 10-BURNER W/ DBL CONVECTION OVEN BASE - SOUTHBEND- S60AA
2. 40 LB FRYER - PITCO - 40D
3. TILTING SKILLET BRAISING PAN - SOUTHBEND - BGLM-40
4. KETTLE TILTING - SOUTHBEND - KGCT-12
5. 30"x8'-0" S/S WORKTABLE W/ DBL OVER SHELF -MDM - SGG-308-FT
6. 30"x8'-0" S/S WORKTABLE W/ DBL OVER SHELF -MDM - SGG-308-FT
7. SPARE NUMBER
8. 30"x8'-0" S/S WORKTABLE W/ DBL OVER SHELF- MDM- SGG-308-FT
9. 24"x48" WIRE SHELVING UNITS (4) - GR 2448
10. 3-COMPARTMENT BAKERY STYLE SINK - BK INDUSTRIES
11. PRE-RINSE W/ ADD ON FAUCET- T & S BRASS
12. SINK FAUCET- T & S BRASS
13. WALL MOUNT POT RACK - TBD
14. 40 QUART MIXER - GLOBE - SP40

## EQUIPMENT SCHEDULE - EXISTING

A. EXHAUST SYSTEM APPROX 25'-0" LONG - EXISTING
B. FIRE SUPPRESSION SYSTEM - BY OTHERS
C. 6-BURNER RANGE - EXISTING
D. 18" STOCK POT RANGES -(4) - EXISTING
E. WALL MOUNT HAND SINKS -(2) - EXISTING
F. 1-COMPARTMENT PREP SINK -EXISTING
G. 2-DOOR REFRIGEARTOR - EXISTING
H. WALK-IN COOLER FREEZER COMBINATION - EXISTING

## PLUMBING ROUGH-IN REQUIREMENTS

| | |
|---|---|
| P-1 | GAS MAIN LINEEXISTING DOWN FROM ABOVE - BT COOKING EQUIPMENT AND CONNECT AS REQUIRED. |
| P-2 | GAS- $\frac{3}{4}$" CONNECTION REQUIRED APPROX 18" AFF 43,000 BTU PER HOUR REQUIRED FOR TILTING KETTLE BT AND CONNECT AS REQUIRED |
| P-3 | GAS- $\frac{3}{4}$" CONNECTION REQUIRED APPROX. 12" AFF 125,000 BTU PER HOUR REQUIRED FOR TILTING SKILLET BT UNIT AND CONNECT AS REQUIRED. |
| P-4 | GAS- $\frac{3}{4}$" CONNECTION REQUIRED APPROX. 6" – AFF 115,000 BTU PER HOUR REQUIRED FOR DEEP FRYER BT UNIT & CONNECT AS REQ'D. |
| P-5 | GAS- $\frac{3}{4}$" CONNECTION REQUIRED APPROX. 30 $\frac{1}{2}$" AFF 350,000 BTU PER HOUR REQUIRED FOR 10 -BURNER RANGE BT UNIT & CONNECT AS REQ'D. |
| P-6 | GAS - $\frac{3}{4}$" CONNECTIONS REQUIRED (4) UNITS TOTAL APPROX 12 $\frac{1}{2}$" AFF FOR STOCK POT RANGES -110,000 BTU PER HOUR PER UNIT REQUIRED BT UNITS & CONNECT AS REQUIRED |
| P-7 | GAS - $\frac{3}{4}$" CONNECTION REQUIRED APPROX 30 $\frac{1}{2}$" AFF FOR 6-BURNER RANGE 205,000 BTU PER HOUR REQUIRD BT UNIT & CONNECT AS REQUIRED. |
| P-8 | HAND SINKS - EXISTING - H & CW - 1 $\frac{1}{2}$" W. |
| P-9-10 | PREP SINK - EXISTING - $\frac{1}{2}$" H & CW - 1 $\frac{1}{2}$" W - DRAIN TO SAFE WASTE SINK |
| P-11 | HAND SINK - EXISTING1 $\frac{1}{2}$" H & CW - 1 $\frac{1}{2}$" W. |
| P-12 | (2) $\frac{1}{2}$" H & CW - 1 $\frac{1}{2}$" W. - RUN 1 1.2" W. TO SAFE WASTE SINK DRAIN THRU MIN3" AIR GAP. -EXISTING |
| P-13 | INDIRECT OPEN SAFE WASTE SINK TO ACCEPT 3-COMP SINK DRAINAGE EXISTING. |
| P-14 | FLOOR DRAIN WITHIN 3'-0" OF WALK-IN COOLER ENTRY DOOR EXISTING |
| P-15 | $\frac{3}{4}$" H & CW REQUIRED FOR SKILLET FILL FAUCET APPROX 28" AFF BT & CONNECT AS REQUIRED. |

## ELECTRICAL ROUGH-IN REQUIREMENTS

| | |
|---|---|
| E-1 | SPARE NUMBER |
| E-2 | (2) 115V. - 1 PHASE - 5.9 AMP OUTLETS EACH FOR 10-BURNER RANGE CONVECTION OVEN BLOWER MOTORS LOCATE TO SUIT FO R UNIT. |
| E-3 | 120V. - 1 PHASE - 2.0 AMPS - FOR TILTING SKILLET CONTROLS LOCATE TO SUIT FOR UNIT |
| E-4 | 120V. - 1 PHASE - 2.0 AMPS - FOR TILTING KETTLE CONTROLS LOCATE TO SUIT FOR UNIT |
| E-5 | 115V. - 1 PHASE - 5.4 AMPS - 18" AFF FOR EXISTING 2-DOOR REFRIGERATOR. |
| E-6 | 220V. - 1 PHASE - 12.0 AMPS - 18" AFF FOR MIXER BT &CONNECT AS REQ'D. |


**THESE PLANS ARE PRIMARILY A GENERAL ARRANGEMENT OF EQUIPMENT, FIXTURES & INTERIOR FURNISHINGS FOR THE CONVENIENCE OF ONE OR MORE OF THE FOLLOWING: OWNER-DEVELOPER, ARCHITECT, GENERAL CONTRACTOR OR SUB CONTRACTOR.**

**THIS DRAWING SHOWS ONLY THOSE CONNECTIONS REQUIRED TO PROPERLY INSTALL THE EQUIPMENT FURNISHED BY BELL & SONS AND DOES NOT SHOW RESTROOM, LIGHT FIXTURE, PLUMBING OR ELECTRICAL RISER DIAGRAMS, HEAT OR AIR CONDITIONING CONNECTIONS, AIR BALANCE CALCULATIONS ETC. AS THESE ARE TO BE FOUND ON ARCHITECTURAL / ENGINEERING SEALED PLANS FURNISHED BY OTHERS.**

**THESE PLANS HAVE BEEN MADE WITH INFORMATION FURNISHED BY EITHER THE OWNER-DEVELOPER, ARCHITECTURAL CONSULTANT OR BY ON SITE INSPECTIONS. THESE SPECIFICATONS AND DIMENSIONS MAY NOT HAVE BEEN IN EXISTANCE AT THE TIME THIS DRAWING WAS MADE AND MUST BE VERIFIED AS WORK PROGRESSES. OUTLETS, PIPES, WALLS FLOOR AND CEILING DIMENSIONS HAVE BEEN LOCATED AS ACCURATELY AS POSSIBLE AND ARE INTENDED TO BE USED ONLY AS A GUIDE. ALL CONDITIONS TO BE VERIFIED AT THE JOB SITE FOR UNKNOWN OBSTRUCTIONS, CONDITIONS OR CHANGES MADE BY OTHERS.**
**THE ATTACHED PLANS ARE TO BE A GUIDE FOR CONTRACTORS AND THEIR SUB-CONTRACTORS IN NO WAY SHALL BELL & SONS BE HELD RESPONSIBLE OR LIABLE FOR ANY WORK OR MATERIALS FURNISHED AND DONE BY PARTIES OTHER THAN AGENTS OR EMPLOYEES OF BELL & SONS.**



BELL & SONS
**26541 W. SEVEN MILE ROAD**
**REDFORD, MI 48240**
**1-800-582-0301**


| | | |
|---|---|---|
| DATE: 10-9-2017 | | BY: MJJ |
| SCALE: 1/4" = 1'-0" | | |
| FOR: ISKCON MICHIGAN INC. - NANDA NIKETANDAS<br>36600 GRAND RIVER AVE FARMINGTON HILLS, MI 48335 | | |
| SHEET NO: 1 OF 1 | REVISED 1-8-2018 | JOB NO: |