NOTE:
SIGN STRUCTURAL FOUNDATION AS REQUIRED BY SITE CONDITIONS. DESIGN IS THE RESPONSIBILITY OF THE SUBCONTRACTOR.

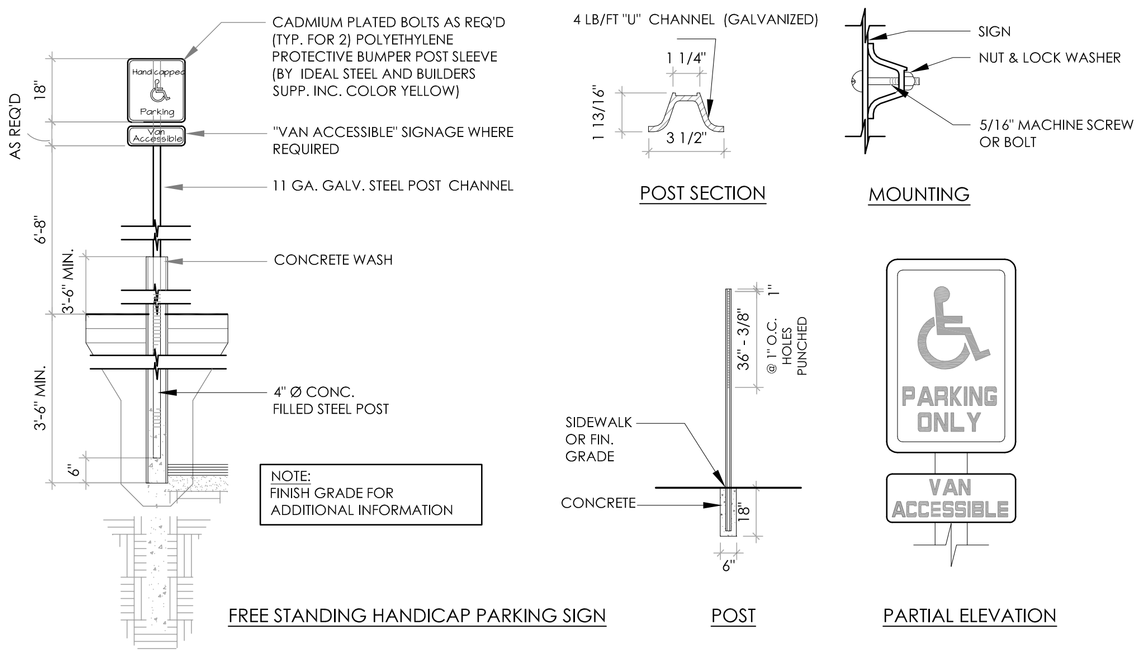

1 ACCESSIBLE PARKING, SIGN & RAMP DETAILS

SCALE: NO SCALE

NOTE:
SIGN STRUCTURAL FOUNDATION AS REQ. BY SITE CONDITIONS. DESIGN IS THE RESPONSIBILITY OF THE SUBCONTRACTOR

1. 120 VOLT 20 AMP ELECTRICAL SUPPLY TO SIGN
2. DATA CABLE FOR THE ACCUVIEW DISPLAY
3. BACK OF SIGN TO BE REMOVABLE FOR SERVICE ACCESS

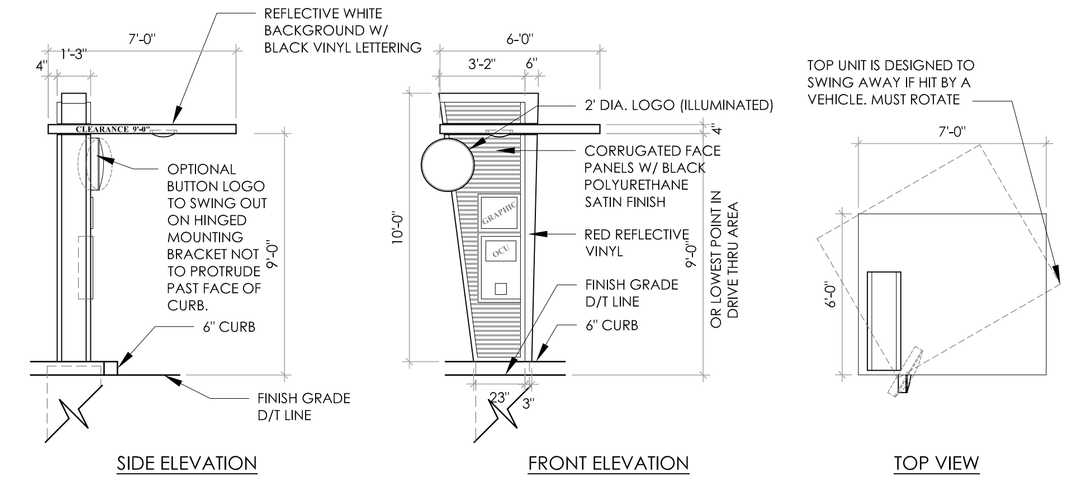

2 ORDER CONFIRMATION ELEVATIONS

SCALE: NO SCALE

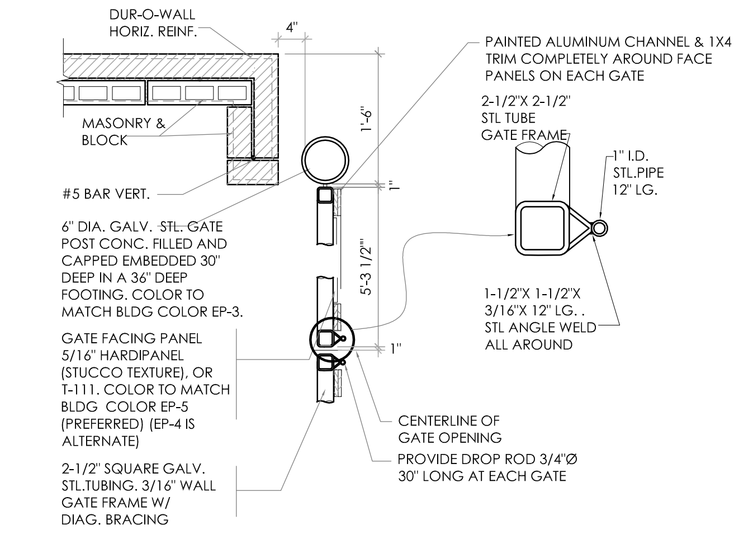

3 GATE HARDWARE DETAIL

SCALE: NO SCALE

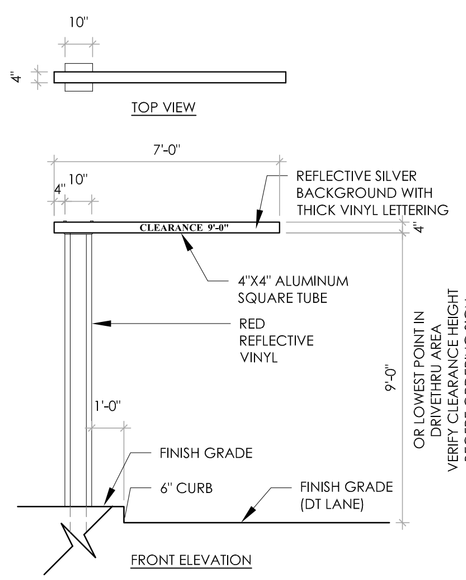

4 DRIVE THRU CLEARANCE SIGN DETAIL

SCALE: NO SCALE

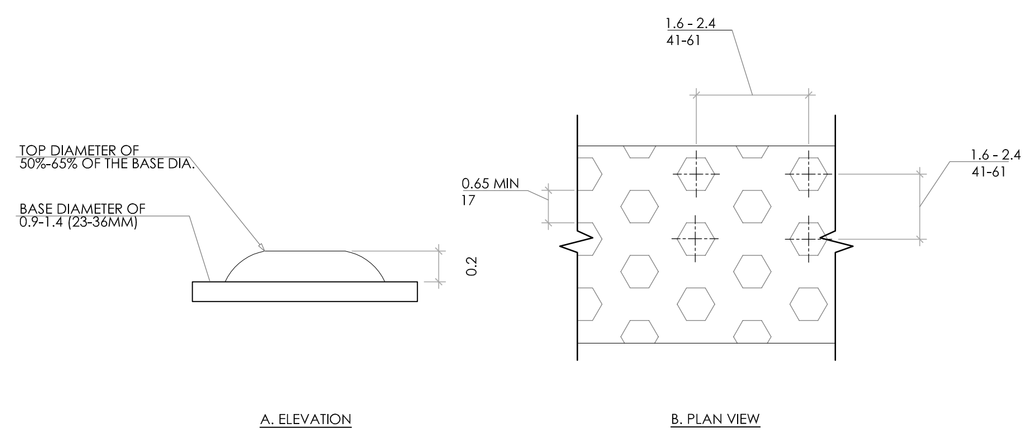

5 TRUNCATED DOME DETAIL

SCALE: NO SCALE

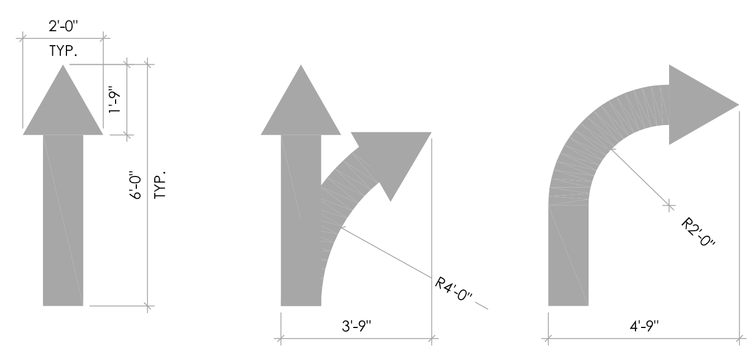

6 PAINTED ARROW DETAILS

SCALE: NO SCALE

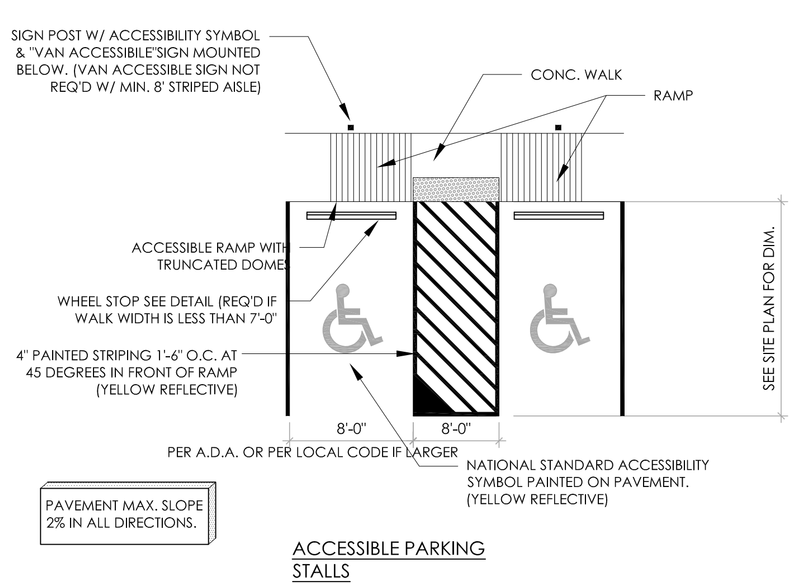

7

SCALE: NO SCALE

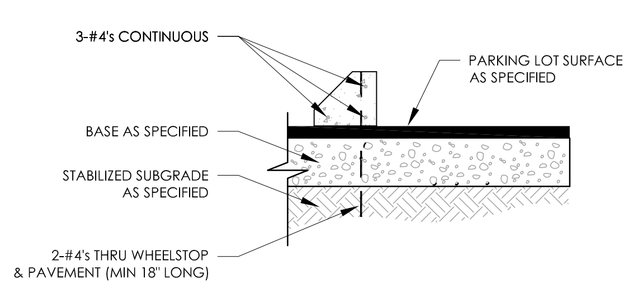

8 PARKING BLOCK DETAIL

SCALE: NO SCALE

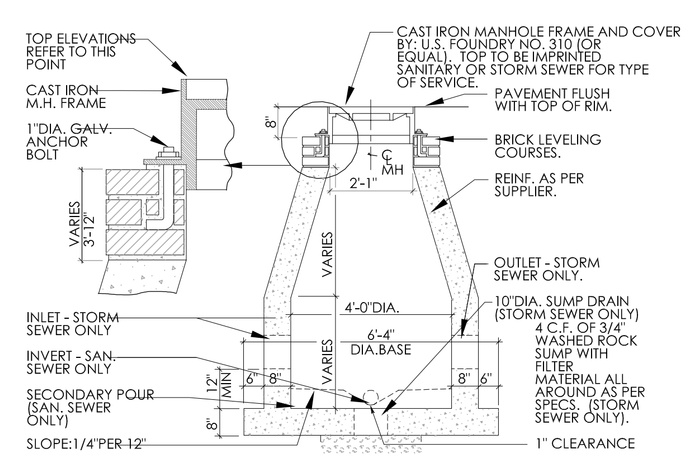

9 CATCH BASIN DETAIL

SCALE: NO SCALE

No.	Date	By	Notes
1	6.28.16	DB	SUBMITTED FOR PERMIT

Drawn By: TC

Checked: SB

Scale: AS NOTED

Date: 04.05.16

ALL RIGHTS RESERVED. NO PART OF THESE DRAWINGS OR SPECIFICATIONS MAY BE COPIED, DISTRIBUTED OR USED IN ANY MANNER OTHER THAN FOR THE SPECIFIC PROJECT FOR WHICH THE HAVE BEEN PREPARED, WITHOUT PRIOR WRITTEN AUTHORIZATION FROM THE ARCHITECT.

BURGER KING CORPORATION

TECHNICAL GROUP, INC.
37716 Hills Tech Drive
Farmington Hills, MI 48331
(248) 426-0700
FAX (248) 426-7004

PROJECT
BURGER KING #886
1912 S MISSION RD
MT. PLEASANT, MI 48858

SHEET TITLE
SITE DETAILS

DO NOT SCALE THIS PRINT. USE FIGURED DIMENSIONS ONLY.

JOB #
TG-16379

SHEET
C-3